PASTERNACK®
THE ENGINEER'S RF SOURCE



SMA Male to SMA Female Bulkhead Cable 24 Inch Length Using RG402 Coax

RF Cable Assemblies Technical Data Sheet PE3825-24

Configuration

- Connector 1: SMA Male
- Connector 2: SMA Female Bulkhead
- Cable Type: RG402

Electrical Specifications

Description	Minimum	Typical	Maximum	Units
Frequency Range	DC		6	GHz
VSWR			1.4:1	
Capacitance		29.9 [98.1]		pF/ft [pF/m]
Dielectric Withstanding Voltage (AC)			1,000	Vrms

Specifications by Frequency

Description	F1	F2	F3	F4	F5	Units
Frequency	1	2	4.5	9	18	GHz
Insertion Loss (Max.)	0.44	0.51	0.7	1.03	1.5	dB

Mechanical Specifications

Cable Assembly

Length	24 in [609.6 mm]
Diameter	0.433 in [11 mm]
Weight	0.083 lbs [37.65 g]

Cable

Cable Type	RG402
Impedance	50 Ohms
Inner Conductor Type	Solid
Inner Conductor Material and Plating	Copper Clad Steel, Silver
Dielectric Type	PTFE
Number of Shields	1
Outer Conductor Material and Plating	Copper, Bare
Outer Conductor Diameter	0.141 in [3.58 mm]

Click the following link (or enter part number in "SEARCH" on website) to obtain additional part information including price, inventory and certifications: SMA Male to SMA Female Bulkhead Cable 24 Inch Length Using RG402 Coax PE3825-24

Pasternack Enterprises, Inc. • P.O. Box 16759, Irvine, CA 92623
Phone: (866) 727-8376 or (949) 261-1920 • **Fax:** (949) 261-7451
Sales@Pasternack.com • Techsupport@Pasternack.com

ISO 9001 : 2008 Registered

© 2016 Pasternack Enterprises All Rights Reserved

PASTERNACK®
THE ENGINEER'S RF SOURCE



SMA Male to SMA Female Bulkhead Cable 24 Inch Length Using RG402 Coax

Connectors

Description	Connector 1	Connector 2
Type	SMA Male	SMA Female Bulkhead
Specification	MIL-STD-348A	MIL-STD-348A
Impedance	50 Ohms	50 Ohms
Contact Material and Plating	Brass, Gold	Beryllium Copper, Gold
Contact Plating Specification	50µ in. minimum	50µ in. minimum
Dielectric Type	Teflon	Teflon
Outer Conductor Material and Plating		Stainless Steel, Gold
Outer Conductor Plating Specification		30µ in. minimum
Coupling Nut Material and Plating	Brass, Nickel	
Coupling Nut Plating Specification	100µ in. minimum	
Hex Size	5/16 in	
Torque	5 in-lbs [0.57 Nm]	
Body Material and Plating	Stainless Steel, Gold	Stainless Steel, Gold
Body Plating Specification	10µ in. minimum	30µ in. minimum

Compliance Certifications (visit www.Pasternack.com for current document)

For RoHS Compliant version, use PE3825LF-24. Contact Pasternack if product cannot be found.

Plotted and Other Data

Notes:

- Values at 25°C, sea level.

Click the following link (or enter part number in “SEARCH” on website) to obtain additional part information including price, inventory and certifications: SMA Male to SMA Female Bulkhead Cable 24 Inch Length Using RG402 Coax PE3825-24

Pasternack Enterprises, Inc. • P.O. Box 16759, Irvine, CA 92623
Phone: (866) 727-8376 or (949) 261-1920 • **Fax:** (949) 261-7451
Sales@Pasternack.com • Techsupport@Pasternack.com

ISO 9001 : 2008 Registered

© 2016 Pasternack Enterprises All Rights Reserved

PASTERNACK
THE ENGINEER'S RF SOURCE



SMA Male to SMA Female Bulkhead Cable 24 Inch Length Using RG402 Coax

RF Cable Assemblies Technical Data Sheet PE3825-24

How to Order

Part Number Configuration:

PE3825 - xx uu

- uu — Unit of Measure: cm = Centimeters, <blank> = Inches
- xx — Length
- PE3825 — Base Number

Example: PE3825-12 = 12 inches long cable
PE3825-100cm = 100 cm long cable

SMA Male to SMA Female Bulkhead Cable 24 Inch Length Using RG402 Coax from Pasternack Enterprises has same day shipment for domestic and International orders. Our RF, microwave and millimeter wave products maintain a 99% availability and are part of the broadest selection in the industry.

Click the following link (or enter part number in "SEARCH" on website) to obtain additional part information including price, inventory and certifications: SMA Male to SMA Female Bulkhead Cable 24 Inch Length Using RG402 Coax PE3825-24

URL: http://www.pasternack.com/sma-male-sma-female-rg402u-cable-assembly-pe3825-24-p.aspx

The information contained in this document is accurate to the best of our knowledge and representative of the part described herein. It may be necessary to make modifications to the part and/or the documentation of the part, in order to implement improvements. Pasternack reserves the right to make such changes as required. Unless otherwise stated, all specifications are nominal. Pasternack does not make any representation or warranty regarding the suitability of the part described herein for any particular purpose, and Pasternack does not assume any liability arising out of the use of any part or documentation.

Pasternack Enterprises, Inc. • P.O. Box 16759, Irvine, CA 92623
Phone: (866) 727-8376 or (949) 261-1920 • **Fax:** (949) 261-7451
Sales@Pasternack.com • Techsupport@Pasternack.com

ISO 9001 : 2008 Registered

© 2016 Pasternack Enterprises All Rights Reserved

PE3825-24 CAD Drawing

SMA Male to SMA Female Bulkhead Cable 24 Inch Length Using RG402 Coax

Standard Lengths	
-12	12"
-24	24"
-36	36"
-48	48"
-60	60"
-XXX	Custom Length in Inches

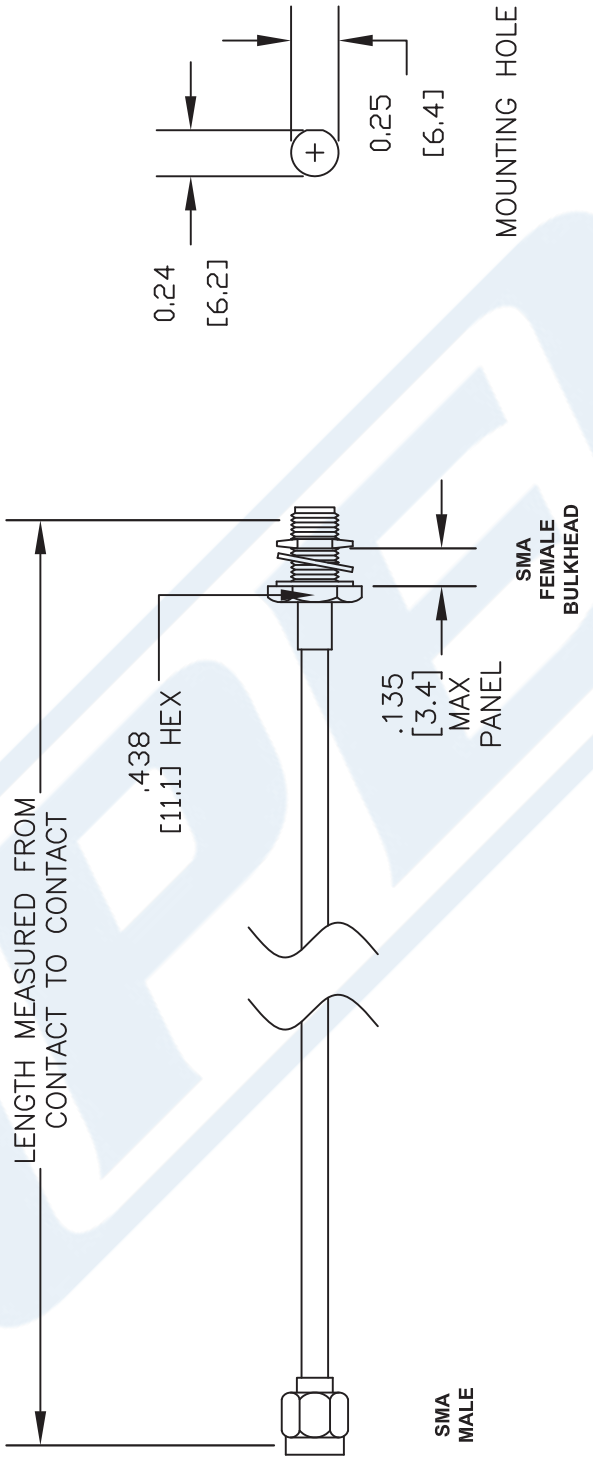

NOTES:
1. UNLESS OTHERWISE SPECIFIED ALL DIMENSIONS ARE NOMINAL.
2. ALL SPECIFICATIONS ARE SUBJECT TO CHANGE WITHOUT NOTICE AT ANY TIME.
3. DIMENSIONS ARE IN INCHES [mm].
4. LENGTH TOLERANCE IS ± 1.5% OR 3/8", WHICHEVER IS GREATER.

DWG TITLE: PE3825-XX

REV. A | FSCM NO. 53919 | CAD FILE 020508 | SCALE N/A | SIZE A | 127

PASTERNACK®
Pasternack Enterprises, Inc.
P.O. Box 16759 | Irvine | CA | 92623
Phone: (949) 261-1920 | **Fax:** (949) 261-7451
Website: www.pasternack.com | **E-Mail:** sales@pasternack.com

© 2016 Pasternack Enterprises All Rights Reserved