COMPONENTS	IMPEDANCE
SMB PLUG	50 OHM
SMB JACK BULKHEAD	50 OHM
RG400/U	50 OHM

Standard Lengths	
-12	12"
-24	24"
-36	36"
-48	48"
-60	60"
-XXX	Custom Length in inches

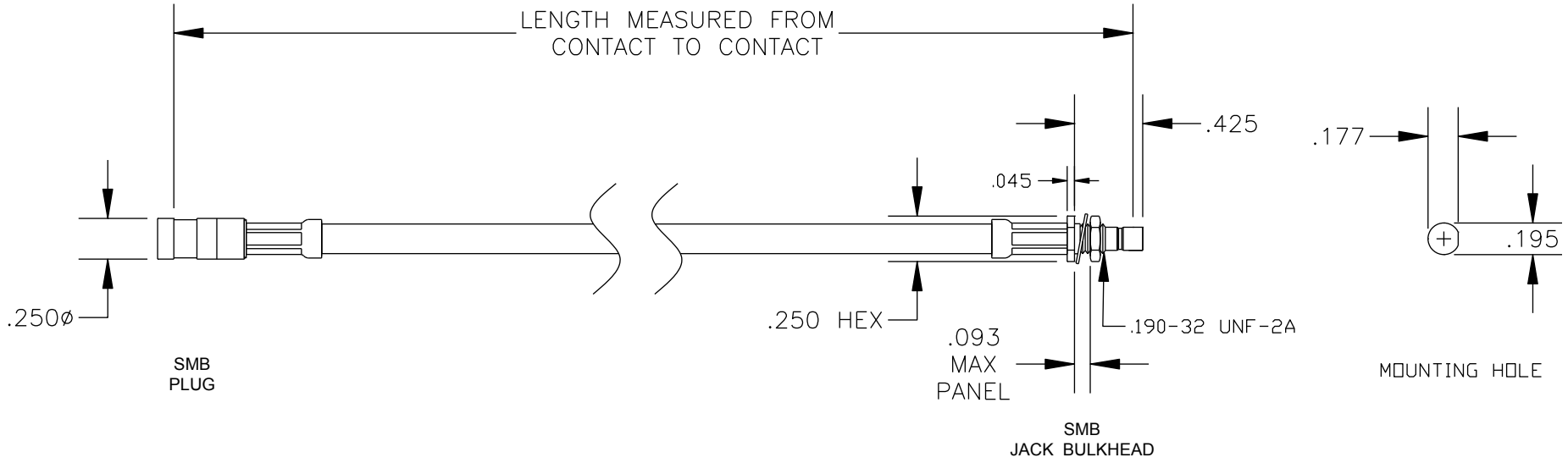

RoHS
2002/95/EC
RoHS Compliance Certified

PASTERNACK ENTERPRISES, INC.
P.O BOX 16759, IRVINE, CA 92623
PHONE (949) 261-1920 FAX (949) 261-7451
WEB ADDRESS: www.pasternack.com
E-MAIL ADDRESS: sales@pasternack.com
COAXIAL & FIBER OPTICS
PASTERNACK ENTERPRISES®
ESTABLISHED 1972

DWG TITLE
PE34483LF-XX

DES. **CABLE ASSEMBLY, RG400/U,** SMB PLUG TO SMB JACK BULKHEAD (LEAD FREE)

REV. A	FSCM NO. 53919	CAD FILE 020408	SCALE N/A	SIZE A	147

NOTES:
1. UNLESS OTHERWISE SPECIFIED ALL DIMENSIONS ARE NOMINAL.
2. ALL SPECIFICATIONS ARE SUBJECT TO CHANGE WITHOUT NOTICE AT ANY TIME.
3. DIMENSIONS ARE IN INCHES.
4. LENGTH TOLERANCE IS ± 1.5% OR ± 3/8", WHICHEVER IS GREATER.