PASTERNACK®
THE ENGINEER'S RF SOURCE



3.5mm Male to 3.5mm Male Test Cable 48 Inch Length Using VNA Test Cable Coax, LF Solder, RoHS

RF Cable Assemblies Technical Data Sheet PE315-48

Configuration

- Connector 1: 3.5mm Male
- Connector 2: 3.5mm Male
- Cable Type: VNA Cable

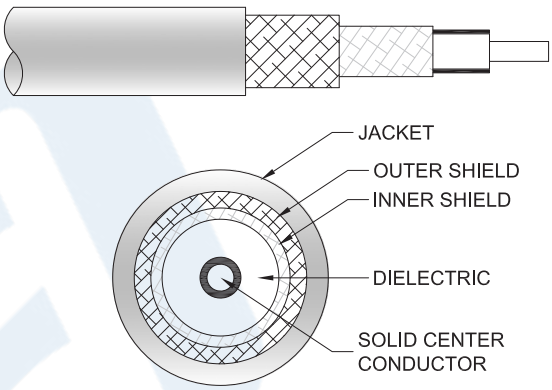

Features

- Max Frequency 26.5 GHz
- 77% Phase Velocity
- Double Shielded
- FEP Jacket

Applications

- General Purpose
- Test & Measurement
- Laboratory Use

Description

Pasternack's PE315-48 3.5mm male to 3.5mm male test 48 inch cable using VNA test cable coax is part of our full line of RF components available for same-day shipping. Pasternack's flexible RF cable assemblies are ideal for applications where tight bends and flexure are required. This Pasternack 3.5mm to 3.5mm cable assembly has a male to male gender configuration with 50 ohm flexible VNA cable coax. The PE315-48 3.5mm male to 3.5mm male cable assembly operates to 26.5 GHz. The double shielding of this Pasternack cable assembly provides excellent shielding effectiveness.

Custom versions of most RF cable assemblies can be built and shipped same day. Custom cable assembly lengths can be obtained by specifying the desired length on the web site at time of order or by contacting a sales representative. Other available RF cable assembly value added services include connector orientation or clocking, heat shrink booting and custom labeling. RF testing can also be performed to document the electrical performance of your cable assembly.

Electrical Specifications

Description	Minimum	Typical	Maximum	Units
Frequency Range	DC		26.5	GHz
Return Loss			-18	dB
Velocity of Propagation		77		%
Dielectric Withstanding Voltage (AC)			1,000	Vrms

Click the following link (or enter part number in "SEARCH" on website) to obtain additional part information including price, inventory and certifications: 3.5mm Male to 3.5mm Male Test Cable 48 Inch Length Using VNA Test Cable Coax, LF Solder, RoHS PE315-48

Pasternack Enterprises, Inc. • P.O. Box 16759, Irvine, CA 92623
Phone: (866) 727-8376 or (949) 261-1920 • **Fax:** (949) 261-7451
Sales@Pasternack.com • Techsupport@Pasternack.com

ISO 9001 : 2008 Registered

© 2016 Pasternack Enterprises All Rights Reserved

PASTERNACK®
THE ENGINEER'S RF SOURCE



3.5mm Male to 3.5mm Male Test Cable 48 Inch Length Using VNA Test Cable Coax, LF Solder, RoHS

RF Cable Assemblies Technical Data Sheet PE315-48

Specifications by Frequency

Description	F1	F2	F3	F4	F5	Units
Frequency	1	10	18	26.5		GHz
Insertion Loss (Max.)	0.32	1.16	1.6	2		dB
Return Loss (Max.)	-30	-25	-20	-18		dB
Power Handling (Max.)		286				Watts

Electrical Specification Notes:
Shielding effectiveness > 100 dB at 1 GHz.
Insertion loss does not include the loss of the connectors.
Insertion loss is estimated as 0.05 x sqrt(fGHz) dB per connector.

Mechanical Specifications

Cable Assembly

Length*	48 in [121.92 cm]
Diameter	0.47 in [11.94 mm]
Weight	0.789 lbs [357.88 g]

Cable

Cable Type	VNA Cable
Impedance	50 Ohms
Inner Conductor Type	Solid
Inner Conductor Material and Plating	Copper, Silver
Dielectric Type	PTFE
Number of Shields	2
Shield Layer 1	Silver Plated Copper Tape
Shield Layer 2	Silver Plated Copper Braid
Jacket Material	FEP
Repeated Minimum Bend Radius	1.38 in [35.05 mm]
Typical Flex Cycles	10,000

Click the following link (or enter part number in "SEARCH" on website) to obtain additional part information including price, inventory and certifications: 3.5mm Male to 3.5mm Male Test Cable 48 Inch Length Using VNA Test Cable Coax, LF Solder, RoHS PE315-48

Pasternack Enterprises, Inc. • P.O. Box 16759, Irvine, CA 92623
Phone: (866) 727-8376 or (949) 261-1920 • **Fax:** (949) 261-7451
Sales@Pasternack.com • Techsupport@Pasternack.com

ISO 9001 : 2008 Registered

© 2016 Pasternack Enterprises All Rights Reserved

PASTERNACK®
THE ENGINEER'S RF SOURCE



3.5mm Male to 3.5mm Male Test Cable 48 Inch Length Using VNA Test Cable Coax, LF Solder, RoHS

RF Cable Assemblies Technical Data Sheet PE315-48

Connectors

Description	Connector 1	Connector 2
Type	3.5mm Male	3.5mm Male
Specification	MIL-STD-348	MIL-STD-348
Impedance	50 Ohms	50 Ohms
Contact Material and Plating	Gold	Gold
Dielectric Type	PPO	PPO
Body Material and Plating	Passivated Stainless Steel	Passivated Stainless Steel
Coupling Nut Material and Plating	Passivated Stainless Steel	Passivated Stainless Steel
Hex Size	5/16 inch	5/16 inch
Torque	8 in-lbs [0.9 Nm]	8 in-lbs [0.9 Nm]

Mechanical Specification Notes:
*All cable assemblies have a length tolerance of 1.5% or ± 3/8", whichever is greater.

Environmental Specifications

Temperature

Operating Range	-55 to +165 deg C

Compliance Certifications (see product page for current document)

Plotted and Other Data

Notes:
- Values at 25°C, sea level.

Click the following link (or enter part number in "SEARCH" on website) to obtain additional part information including price, inventory and certifications: 3.5mm Male to 3.5mm Male Test Cable 48 Inch Length Using VNA Test Cable Coax, LF Solder, RoHS PE315-48

Pasternack Enterprises, Inc. • P.O. Box 16759, Irvine, CA 92623
Phone: (866) 727-8376 or (949) 261-1920 • **Fax:** (949) 261-7451
Sales@Pasternack.com • Techsupport@Pasternack.com

ISO 9001 : 2008 Registered

© 2016 Pasternack Enterprises All Rights Reserved

PASTERNACK
THE ENGINEER'S RF SOURCE

3.5mm Male to 3.5mm Male Test Cable 48 Inch Length Using VNA Test Cable Coax, LF Solder, RoHS



RF Cable Assemblies Technical Data Sheet PE315-48

How to Order

Part Number Configuration: **PE315 - xx uu**

- uu — Unit of Measure: cm = Centimeters, <blank> = Inches
- xx — Length
- PE315 — Base Number

Example: PE315-12 = 12 inches long cable
PE315-100cm = 100 cm long cable

3.5mm Male to 3.5mm Male Test Cable 48 Inch Length Using VNA Test Cable Coax, LF Solder, RoHS from Pasternack Enterprises has same day shipment for domestic and International orders. Our RF, microwave and millimeter wave products maintain a 99% availability and are part of the broadest selection in the industry.

Click the following link (or enter part number in "SEARCH" on website) to obtain additional part information including price, inventory and certifications: 3.5mm Male to 3.5mm Male Test Cable 48 Inch Length Using VNA Test Cable Coax, LF Solder, RoHS PE315-48

URL: https://www.pasternack.com/3.5mm-male-3.5mm-male-vna-cable-cable-assembly-pe315-48-p.aspx

The information contained in this document is accurate to the best of our knowledge and representative of the part described herein. It may be necessary to make modifications to the part and/or the documentation of the part, in order to implement improvements. Pasternack reserves the right to make such changes as required. Unless otherwise stated, all specifications are nominal. Pasternack does not make any representation or warranty regarding the suitability of the part described herein for any particular purpose, and Pasternack does not assume any liability arising out of the use of any part or documentation.

Pasternack Enterprises, Inc. • P.O. Box 16759, Irvine, CA 92623
Phone: (866) 727-8376 or (949) 261-1920 • **Fax:** (949) 261-7451
Sales@Pasternack.com • Techsupport@Pasternack.com

ISO 9001 : 2008 Registered

© 2016 Pasternack Enterprises All Rights Reserved

© 2016 Pasternack Enterprises All Rights Reserved

PE315-48 CAD Drawing

3.5mm Male to 3.5mm Male Test Cable 48 Inch Length
Using VNA Test Cable Coax, LF Solder, RoHS

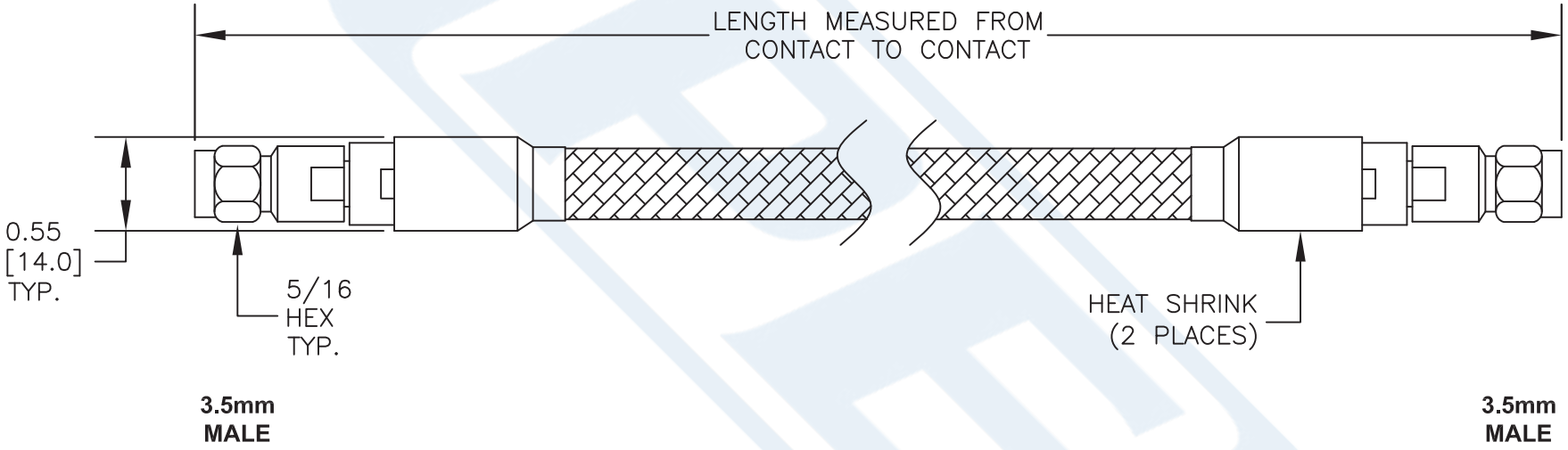

STANDARD TOLERANCES	
.X	±0.2
.XX	±0.1
.XXX	±0.05

*STANDARD TOLERANCES APPLY ONLY TO DIMENSIONS IN INCHES

PASTERNACK
THE ENGINEER'S RF SOURCE
Pasternack Enterprises, Inc.
P.O. Box 16759 | Irvine | CA | 92623
Phone: (949) 261-1920 | **Fax:** (949) 261-7451
Website: www.pasternack.com | **E-Mail:** sales@pasternack.com

DWG TITLE

PE315

NOTES:
1. UNLESS OTHERWISE SPECIFIED ALL DIMENSIONS ARE NOMINAL.
2. ALL SPECIFICATIONS ARE SUBJECT TO CHANGE WITHOUT NOTICE AT ANY TIME.
3. DIMENSIONS ARE IN INCHES [mm].

FSCM NO. 53919	CAD FILE 110816	SCALE N/A	SIZE A	41742