Silicom Connectivity Solutions

PE310G4BPI71 Bypass Adapter

Quad Port Fiber 10 Gigabit Ethernet PCI Express Bypass Server Adapter Intel® XL710 Based

Product Description



Silicom's quad port fiber 10Gigabit Ethernet Bypass server adapter is a PCI-Express X8 network interface card that contains four 10 Gigabit Ethernet ports on a PCI-E adapter.

The Silicom's quad port fiber 10 Gigabit Ethernet Bypass server adapter is targeted to inline network system that maintains network connectivity when system fails.

Silicom's quad port fiber 10 Gigabit Ethernet Bypass server adapter supports Normal, Bypass and Disconnect modes. In Normal mode, the ports are independent interfaces. In Bypass mode, all packets received from one port are transmitted to the adjacent port.

In Disconnect mode, the adapter simulates switch / rout cable disconnection. Silicom's quad port fiber 10 Gigabit Ethernet Bypass server adapter can Bypass or disconnect its Ethernet ports on a host system failure, power off, or upon software request.

In Bypass mode, the connections of the Ethernet ports are disconnected from the system and switched over to the other port to create a crossed connection loop-back between the Ethernet ports. Hence, in bypass mode all packets received from one port are transmitted to the adjacent port and vice versa.



This feature enables to bypass a failed system and provides maximum up time for the network. Silicom's quad port fiber 10 Gigabit Ethernet Bypass server adapter includes an on board WDT (Watch Dog Timer) controller.

The adapter's software drivers or software application can write commands to the on board WDT controller. The adapter's software drivers, WDT controller and the Bypass circuitry provide an interface that control and manage the mode of the adapter.

The Silicom 10 Gigabit Ethernet Bypass server adapters are based on Intel XL710 Ethernet controllers.

Key Features

Bypass / Disconnect:

- Bypass / Disconnect Ethernet ports on Power Fail, System Hangs or Software Application Hangs
- Software programmable Bypass, Disconnect or Normal Mode
- On Board Watch Dog Timer (WDT) Controller
- Software programmable time out interval
- Software Programmable WDT Enable / Disable counter
- Software programmable Bypass Capability Enable / Disable
- Software Programmable Disconnect Capability Enable / Disable
- Software Programmable mode (Bypass, Normal or Disconnect mode) at Power up
- Software Programmable mode (Bypass, Normal mode) at Power off
- Independent Bypass operation in every two ports
- Emulates standard NIC

-SR: Fiber 10 Gigabit Ethernet 10GBASE-SR:

- 10 Gigabit Fiber Ethernet port supports 10GBASE-SR (850nm LAN PHY)
- MM 850nm 10GBASE-SW/SR, Duplex Low Profile Transceiver

-LR: Fiber 10 Gigabit Ethernet 10GBASE-LR:

- 10 Gigabit Fiber Ethernet port supports 10GBASE-LR (1310nm LAN PHY)
- SM 1310nm 10GBASE-LW/LR, Duplex Low Profile Transceiver

Performance Features:

- Support for jumbo frame up to 9.5KB
- Flow control support
- Priority Flow Control (draft IEEE 802.1Qbb)
- Enhanced Transmission Selection (draft IEEE802.1az)
- Statistics management and RMON
- 802.1q VLAN support
- DCB/DCB-X support
- Message Signal interrupts (MSI-X)
- Storage – Enabling competitive performance with native OS intelligent offload solutions, including NAS, iSCSI and FCoE

Host Interface:

- PCI Express X8 lanes
- Support PCI Express Base Specification 3.0 (8GT/s)

Technical Specifications

Bypass Specifications	
WDT Interval (Software Programmable):	3,276,800 mSec (3,276.8 Sec): Maximum 100 mSec (0.1 Sec) : Minimum WDT Interval = (2^wdt_interval_parameter)*(0.1) sec. wdt_interval_parameter: { Valid Range: 0-15}
– SR: Fiber 10GBASE-SR Technical Specifications	
IEEE Standard / Network topology:	Fiber 10 Gigabit Ethernet, 10GBase-SR (850nm)
Data Transfer Rate:	10.3125GBd
Cables and Operating distance: Up to:	Multimode fiber: 62.5um, 160MHz/Km 13m* 62.5um, (OM1)200MHz/Km 16.5m * 50um, 400MHz/Km 66m 50um, (OM2)500 MHz/Km 82m 50um, (OM3)2000MHz/Km 300m * Defined as half as the distance as specified in the optical transceiver
Optical Output Power:	Normal Mode (Bypass Off): Minimum: -7.3 dBm
Optical Receive Sensitivity:	Normal Mode (Bypass Off) Maximum: -11 dBm
Insertion Loss:	Bypass Mode: Insertion loss Maximum 1.6 dB
– LR: Fiber 10GBASE-LR Technical Specifications	
IEEE Standard / Network topology:	Fiber 10Gigabit Ethernet, 10GBASE-LR (1310nm)

Data Transfer Rate:	10.3125GBd
Cables and Operating distance: **Up to:**	Single-Mode: 5Km at 9um * * Defined as half as the distance as specified in the optical transceiver
Optical Output Power:	Normal Mode (Bypass Off): Minimum: -5.2 dBm
Optical Receive Sensitivity:	Normal Mode (Bypass Off) Maximum: -12.6 dBm
Insertion Loss:	Bypass Mode: Insertion loss (Optical Power attenuation between TX to RX) (LC- fiber- switch- LC) Typical: TBD dB (From RX to TX) Maximum 0.5 dB
Operating Systems Support	
Operating system support:	Windows Linux FreeBSD VMware
General Technical Specifications	
Interface Standard:	PCI-Express Base Specification Revision 3.0 (8 GTs)
Board Size:	Standard height short add-in card 167.64mm X 109.1 mm (6.6”X 4.296”)
PCI Express Card Type:	X8 Lane
PCI Express Voltage:	+12V +- 8%
PCI Connector:	Gold Finger: X8 Lane
Controller:	Intel XL710
Holder:	Metal Bracket
I/O:	LC located on internal bracket
Power Consumption (SR):	6.24 W, 0.52 A at 12V: Typical all ports operate at 10Gb/s 5.4 W, 0.45 A at 12V: Typical Bypass Mode. 5.4 W, 0.45 A at 12V: Typical Disconnect Mode.

	6 W, 0.5 A at 12V: Typical No link at all ports
Power Consumption (LR):	6.36 W, 0.53 A at 12V: Typical all ports operate at 10Gb/s 5.52 W, 0.46 A at 12V: Typical Bypass Mode. 5.52 W, 0.46 A at 12V: Typical Disconnect Mode. 6.12 W 0.51 A at 12V: Typical No link at all ports
Operating Humidity:	0%–90%, non-condensing
Operating Temperature:	0°C – 45°C (32°F – 113°F)
Storage:	-40°C–65°C (-40°F–149°F)
EMC Certifications:	FCC 47CFR Part 15:2013, Subpart B Class B Conducted emissions Radiated emissions EN 55022: 2010, Class B Conducted disturbance at mains terminals Conducted disturbance at telecommunication port Radiated disturbance EN 61000-3-2: 2006+A1(09)+A2(09) Harmonic current emissions EN 61000-3-3: 2008 Voltage fluctuations and flicker EN 55024: 2010 Immunity to electrostatic discharge (ESD) Radiated immunity to radio frequency electromagnetic field Conducted immunity to electrical fast transients / bursts (EFT/ B) Conducted immunity to voltage surges Conducted immunity to disturbances induced by radio frequency field Conducted immunity to voltage dips and short interruptions
LEDs	
LEDs:	(1) LED per port LED: SPD/ACT: Blinks on activity 10Gbps (Blue) (1) Bi- color LED per segment (2 ports): Off on Normal Mode Turns on Bypass Mode (Green) / Turns on Disconnect Mode (Yellow)
LEDs location:	LEDs are located on the PCB, visible via holes in the metal bracket. Each 2 Blue 10G SPD-ACT LEDs (1 LED per port) are located under their own LC connector port.

	(Each LC contains 2 ports). The Yellow/Green for Disconnect and Bypass LED is located between the 2 ports in each segment – in the middle under each LC
Connectors:	(2) LC

Functional Description

Silicom's Bypass Server adapters support Normal, Bypass and Disconnect modes.

In Normal mode, the ports are independent interfaces (see Figure 1: Normal mode, one Bypass pair is illustrated).

Figure 1: Normal Mode Functional Block Diagram

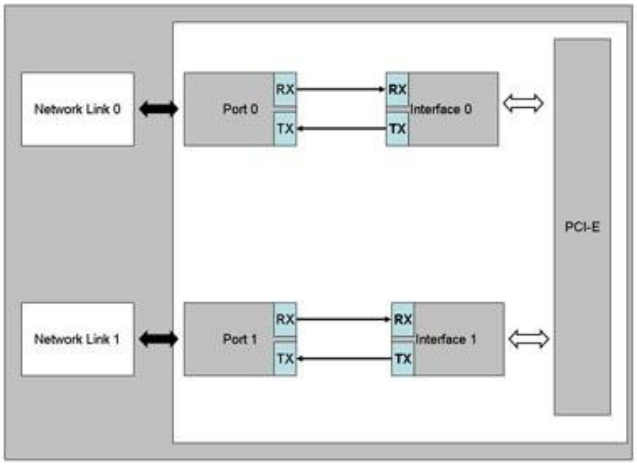

In Bypass mode, the connections of the Ethernet network ports are Disconnected from the interfaces and switched over to the other port to create a crossed connection loop-back between the Ethernet ports. The connections of the interfaces are left not connected. (See Figure 2: one Bypass pair illustrated)

Figure 2: Bypass Mode Functional Block Diagram

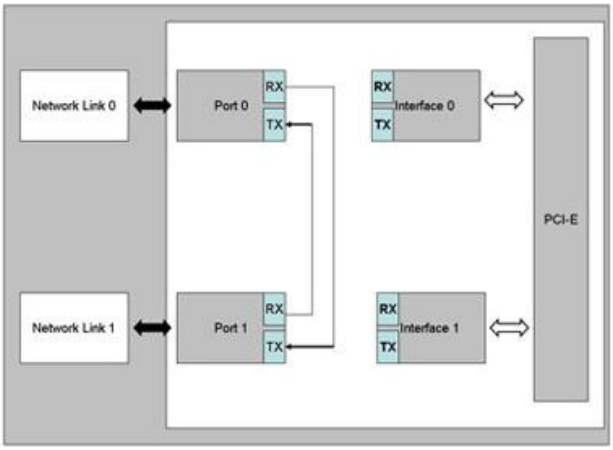

In Disconnect mode, the transmit connections of the Ethernet network ports are Disconnected from the interfaces. (See Figure 3: one Bypass pair illustrated)

Figure 3: Disconnect Mode Functional Block Diagram

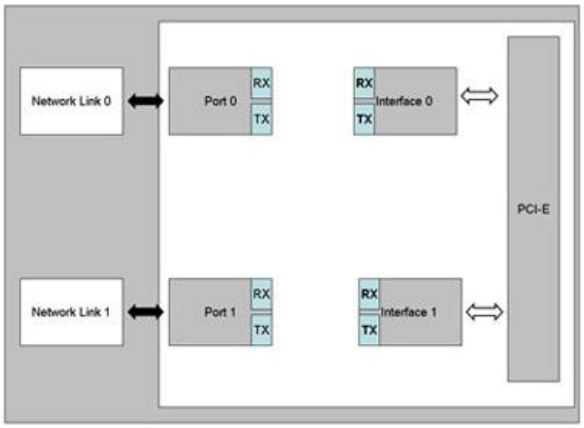

Silicom Bypass server adapters include an on board Controller that can Bypass the Ethernet ports on host system failure like Power Off, System hangs or software application hangs. The software programmable Watch Dog Timer (WDT) Controller detects a host system fails and it will Bypass automatically the Ethernet ports after programmable time out interval. The WDT Controller can be software programmable enabled or disabled.

Silicom Bypass server adapters support software programmable to select Bypass or Normal mode. In Normal mode, the ports of the adapters remain independently operational.

The drivers of the adapters and the Bypass circuitry provides an interface that control and management the mode of the adapter. The adapter software driver or software application can writes commands to the on board controller. The on board controller processes the commands and activates the bypass circuitry accordingly.

After power up the default mode of the adapter is to be in Bypass mode. After driver is loaded, the adapter software driver or application can set the card to a Normal mode. After the Host system issues reset, setting of Bypass controller and circuitry are reserved.

Silicom Bypass server adapters support Disable Bypass Capability; hence, if those adapters receive Disable Bypass Capability command, the adapter does not Bypass its Ethernet ports, in this state the four Ethernet ports are independent. The Disable Bypass Capability state is reserved also after power off. This feature enables to emulate a standard NIC.

Silicom Bypass server adapters can be set to Bypass or Normal mode at power up. This setting programmable and is reserved also after power off.

Order Information

P/N	Description	Notes
PE310G4BPI71-SR	Quad Port Fiber (SR) 10 Gigabit Ethernet PCI Express Bypass Server Adapter	X8 Gen 3, Based on Intel XL710, on board support for Fiber SR, RoHS compliant
PE310G4BPI71-LR	Quad Port Fiber (LR) 10 Gigabit Ethernet PCI Express Bypass Server Adapter	X8 Gen 3, Based on Intel XL710, on board support for Fiber LR, RoHS compliant