PASTERNACK®
THE ENGINEER'S RF SOURCE



2 GHz Phase Locked Oscillator, 10 MHz External Ref., Phase Noise -100 dBc/Hz, SMA

Phase Locked Oscillators Technical Data Sheet PE19XC7002

Features

- Phase Locked Oscillator (PLO) Module
- 2,000 MHz Fixed Frequency
- 10 MHz External Reference Frequency
- Output Power: +7 dBm typical
- Low Phase Noise: -100 dBc/Hz @ 10 kHz offset typical
- Low Spurious Suppression: < -70 dBc typical
- Nickel Plated Compact Package
- SMA Connectors
- TTL Lock Detect Pin
- -30°C to +70°C Operating Temperature
- Designed to meet MIL-STD-202 Test Conditions

Applications

- Phase Locked Loop
- Function Generators
- Frequency Synthesizers
- Receivers
- Electronic Jamming Equipment
- Local Oscillator
- Wireless Communications
- SATCOM
- Optical Communications
- Military Electronic Systems

Description

The PE19XC7002 is a highly reliable Phase Locked Oscillator (PLO) module that operates at a fixed frequency of 2,000 MHz. The versatile design supports a 10 MHz External Reference for design flexibility. Impressive performance includes an output power level of +7 dBm typical and low phase noise performance of -100 dBc/Hz @ 10 KHz offset typical, while using a +12V single DC supply. The design also exhibits excellent Spurious suppression levels < -70 dBc typical. The PCB solder assembly is RoHS compliant and available in a compact coaxial package that's Nickel plated and supports SMA connectors with DC bias pins and a TTL Lock Detect pin available to signal an out-of-lock condition. The Phase Locked Oscillator operates over a temperature range of -30°C to +70°C and is designed to meet MIL-STD-202 test conditions for Vibration and Shock.

Electrical Specifications

Description	Minimum	Typical	Maximum	Units
Ouput Frequency		2		GHz
Ouput Impedance		50		Ohms
Output Power	+4	+7	+10	dBm
Phase Noise @ 1kHz Offset		-90	-85	dBc/Hz
Phase Noise @ 10kHz Offset		-100	-95	dBc/Hz
Phase Noise @ 100kHz Offset		-120	-115	dBc/Hz
Phase Noise @ 1MHz Offset		-140	-135	dBc/Hz
Reference Frequency		10		MHz
Reference Impedance		50		Ohms
Reference Power	+4	+7	+10	dBm
Reference Phase Noise @ 10Hz Offset		-110		dBc/Hz
Reference Phase Noise @ 100Hz Offset		-130		dBc/Hz
Reference Phase Noise @ 1kHz Offset		-145		dBc/Hz
2nd Harmonics		-25	-20	dBc
Spurious		-70	-65	dBc

Click the following link (or enter part number in "SEARCH" on website) to obtain additional part information including price, inventory and certifications: 2 GHz Phase Locked Oscillator, 10 MHz External Ref., Phase Noise -100 dBc/Hz, SMA PE19XC7002

Pasternack Enterprises, Inc. • P.O. Box 16759, Irvine, CA 92623
Phone: (866) 727-8376 or (949) 261-1920 • **Fax:** (949) 261-7451
Sales@Pasternack.com • Techsupport@Pasternack.com

© 2018 Pasternack Enterprises All Rights Reserved



2 GHz Phase Locked Oscillator, 10 MHz External Ref., Phase Noise -100 dBc/Hz, SMA

Phase Locked Oscillators Technical Data Sheet PE19XC7002

Lock Detect	5 VDC TTL, High=Lock	
Supply Voltage (DC) 1	12	Vdc
Supply Current (DC) 1	25	mA

Mechanical Specifications

Size

Length	2 in [50.8 mm]
Width	1.5 in [38.1 mm]
Height	0.6 in [15.24 mm]
Weight	0.104 lbs [47.17 g]
Body Material and Plating	Aluminum

Configuration

Design	Commercial
Reference Type	External
Package Style	Connectorized
Input Connector	SMA Female
Output Connector	SMA Female

Environmental Specifications

Temperature

Operating Range	-30 to +70 deg C
Shock	IAW MIL-STD-202, Method 213, Condition A
Vibration	IAW MIL-STD-202, Method 204, Condition A
ESD Sensitivity	ESD Sensitive Material, Transport material in Approved ESD bags. Handle only in ESD Workstation.



Compliance Certifications (see product page for current document)

Plotted and Other Data

Notes:

Click the following link (or enter part number in “SEARCH” on website) to obtain additional part information including price, inventory and certifications: 2 GHz Phase Locked Oscillator, 10 MHz External Ref., Phase Noise -100 dBc/Hz, SMA PE19XC7002

Pasternack Enterprises, Inc. • P.O. Box 16759, Irvine, CA 92623
Phone: (866) 727-8376 or (949) 261-1920 • **Fax:** (949) 261-7451
Sales@Pasternack.com • Techsupport@Pasternack.com

© 2018 Pasternack Enterprises All Rights Reserved

PASTERNACK®
THE ENGINEER'S RF SOURCE



2 GHz Phase Locked Oscillator, 10 MHz External Ref., Phase Noise -100 dBc/Hz, SMA

Phase Locked Oscillators Technical Data Sheet PE19XC7002

Functional Block Diagram

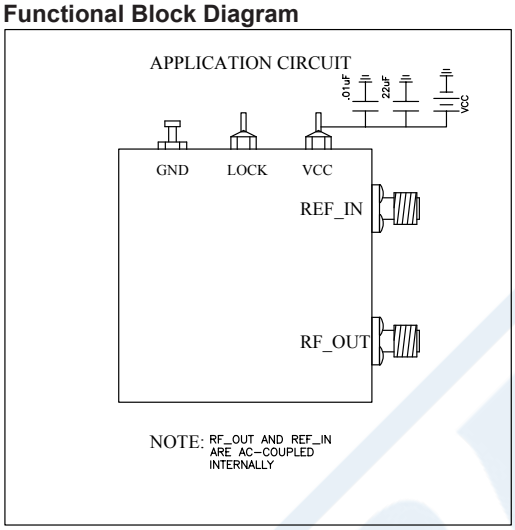

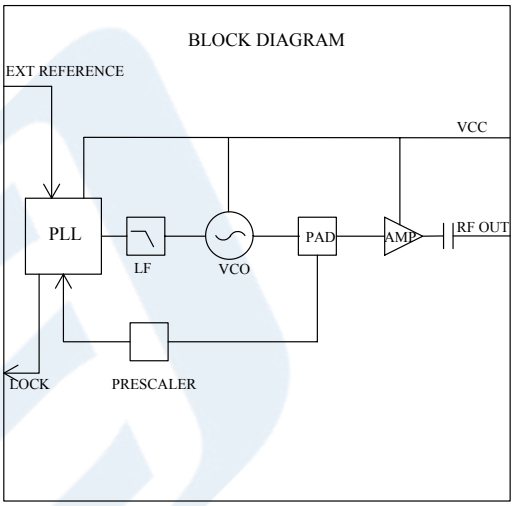

Typical Performance Data

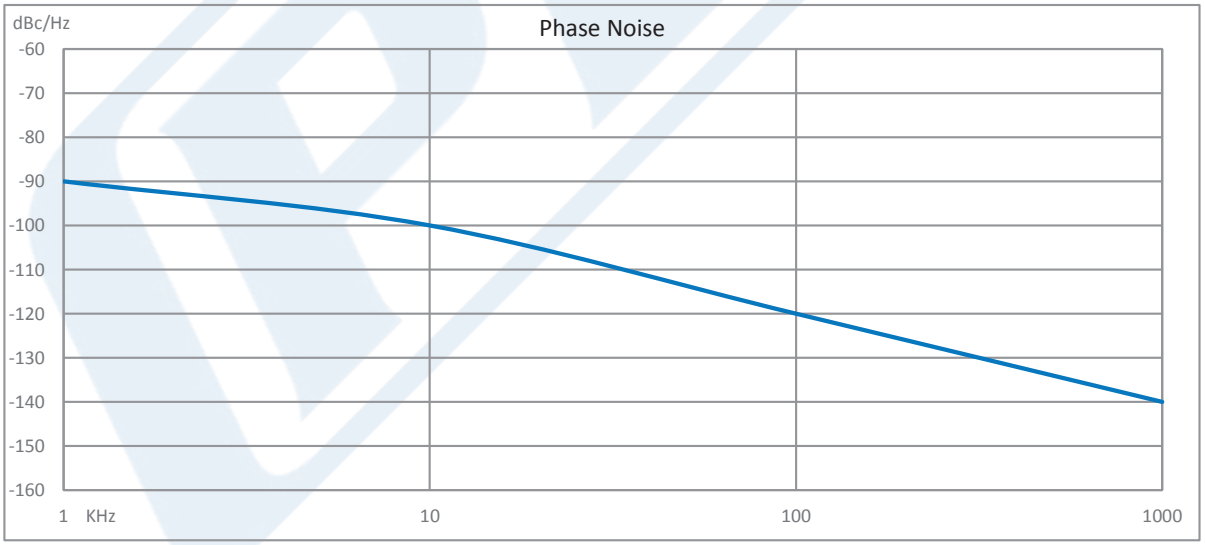

Click the following link (or enter part number in "SEARCH" on website) to obtain additional part information including price, inventory and certifications: 2 GHz Phase Locked Oscillator, 10 MHz External Ref., Phase Noise -100 dBc/Hz, SMA PE19XC7002

Pasternack Enterprises, Inc. • P.O. Box 16759, Irvine, CA 92623
Phone: (866) 727-8376 or (949) 261-1920 • **Fax:** (949) 261-7451
Sales@Pasternack.com • Techsupport@Pasternack.com

© 2018 Pasternack Enterprises All Rights Reserved

PASTERNACK®
THE ENGINEER'S RF SOURCE



2 GHz Phase Locked Oscillator, 10 MHz External Ref., Phase Noise -100 dBc/Hz, SMA

Phase Locked Oscillators Technical Data Sheet PE19XC7002

2 GHz Phase Locked Oscillator, 10 MHz External Ref., Phase Noise -100 dBc/Hz, SMA from Pasternack Enterprises has same day shipment for domestic and International orders. Our RF, microwave and millimeter wave products maintain a 99.4% availability and are part of the broadest selection in the industry.

Click the following link (or enter part number in "SEARCH" on website) to obtain additional part information including price, inventory and certifications: 2 GHz Phase Locked Oscillator, 10 MHz External Ref., Phase Noise -100 dBc/Hz, SMA PE19XC7002

URL: https://www.pasternack.com/2-ghz-phase-locked-oscillator-external-pe19xc7002-p.aspx

The information contained in this document is accurate to the best of our knowledge and representative of the part described herein. It may be necessary to make modifications to the part and/or the documentation of the part, in order to implement improvements. Pasternack reserves the right to make such changes as required. Unless otherwise stated, all specifications are nominal. Pasternack does not make any representation or warranty regarding the suitability of the part described herein for any particular purpose, and Pasternack does not assume any liability arising out of the use of any part or documentation.

Pasternack Enterprises, Inc. • P.O. Box 16759, Irvine, CA 92623
Phone: (866) 727-8376 or (949) 261-1920 • **Fax:** (949) 261-7451
Sales@Pasternack.com • Techsupport@Pasternack.com

© 2018 Pasternack Enterprises All Rights Reserved

PE19XC7002 CAD Drawing

2 GHz Phase Locked Oscillator, 10 MHz External Ref., Phase Noise -100 dBc/Hz, SMA

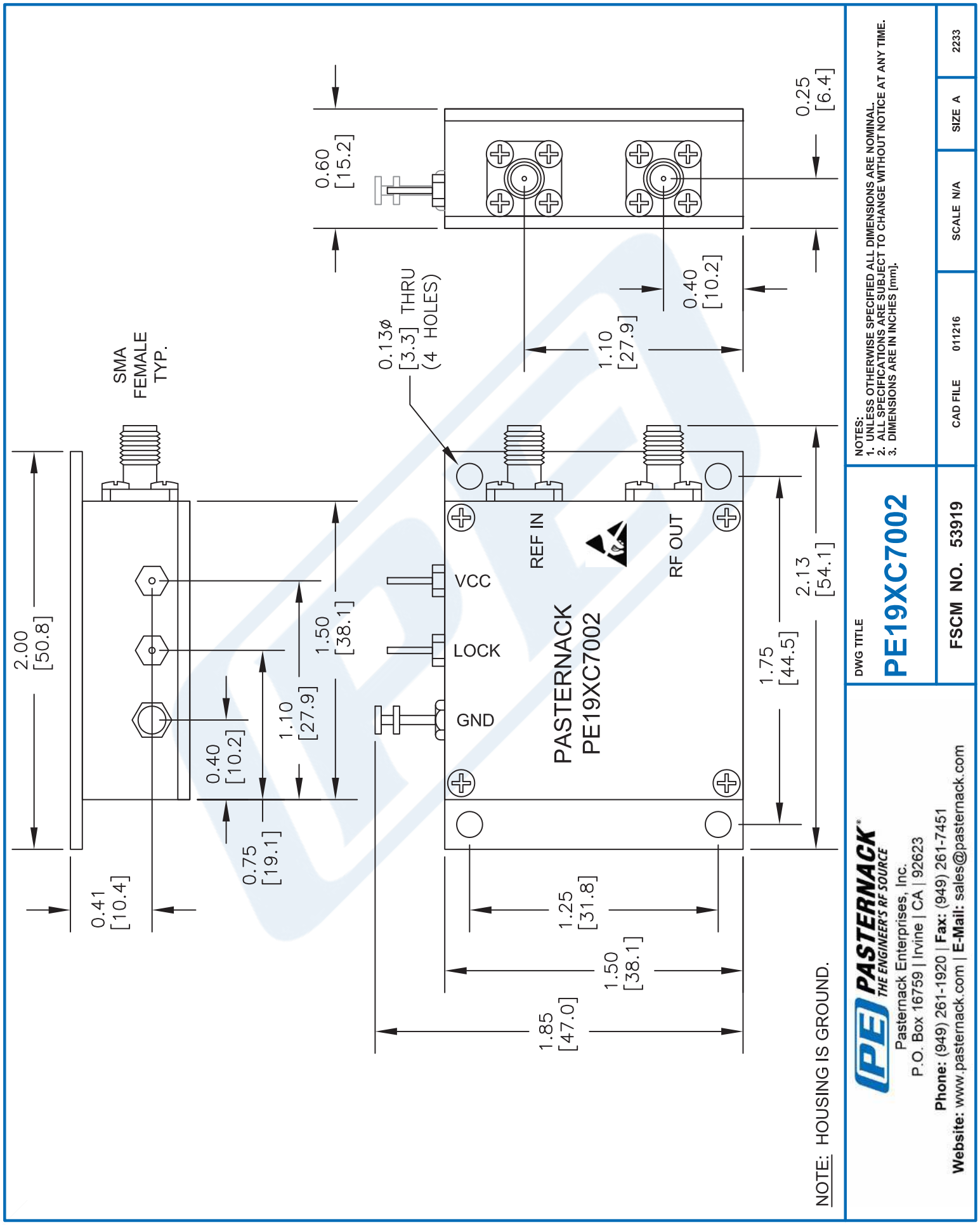

© 2018 Pasternack Enterprises All Rights Reserved