SMT GATE DRIVE TRANSFORMERS
1500VDC Basic and Operational Insulation

Pulse
A TECHNITROL COMPANY

RoHS COMPLIANT



- 1500VDC isolation between Gate and Drive
- Basic insulation (1.4mm creepage/clearance) and operational available
- Operating frequency: 50kHz and up

Electrical Specifications @ 25°C — Operating Temperature -40°C to 130°C [5]

Part [3,4] Number	Turns Ratio	Pri-Sec Insulation (VDC)	MAX [1] V*µsec	Primary Inductance (µH MIN)	Leakage [2] Inductance (µH MAX)	DCR Primary (Ω MAX)	DCR Secondary (Ω MAX)	Package Size (L x W x H) (mm MAX)
OPERATIONAL INSULATION								
PE-68386NL	1:1	1500	9.7	785	0.46	0.60	0.60	8.6 x 6.7 x 2.5
P0926NL	1:1:1	1500	23.8	300	0.50	2.00	2.00	8.0 x 6.6 x 5.3
P0544NL	1:1:1	1500	45.1	3300	0.70	1.60	1.60	9.0 x 8.6 x 7.6
P2033	1:1	1500	9.3	500	17.00	0.80	0.80	7.2 x 6.1 x 3.8
PA0264NL	1:1:1	1500	12.7	1140	0.65	0.75	0.75	8.6 x 6.7 x 3.6
BASIC INSULATION (1.4 MM CREEPAGE AND CLEARANCE BETWEEN PRIMARY AND SECONDARY)								
PA0173NL	1:1:1	1500 Vrms	17.2	980	0.75	0.62	0.88	11.8 x 8.8 x 4.0
PA0185NL	1:1	1500 Vrms	17.2	980	0.75	0.88	0.62	11.8 x 8.8 x 4.0
PA0184NL	1:1	1500 Vrms	27.2	1200	0.50	0.91	0.91	9.0 x 8.6 x 7.6
PA0297NL	2:1:1	1500 Vrms	27.2	1200	0.60	0.91	0.46	9.0 x 8.6 x 7.6
PA0510NL	2.5:1:1	1500 Vrms	27.2	1200	0.68	0.91	0.380	9.0 x 8.6 x 7.6

NOTES:

1. The maximum volt-µsec rating limits the peak flux density to 2200 Gauss when used in a unipolar drive application. For bi-polar drive applications a maximum volt-µsec of two times this rating is acceptable (ie: 2* (volt*µsec rating) Volt*µsec = (voltage applied to the primary) * dutycycle / Frequecy = V * alpha / Freq_Hz = V * µsec
2. Leakage inductance is measured at primary terminals with all secondaries shorted.
3. Optional Tape & Reel packaging can be ordered by adding a "**T**" suffix to the part number (i.e. P0544NL becomes P0544NL**T**). Pulse complies to industry standard tape and reel specification EIA481.
4. The "**NL**" suffix indicates an RoHS-compliant part number. Non-NL suffixed parts are not necessarily RoHS compliant, but are electrically and mechanically equivalent to NL versions. If a part number does not have the "**NL**" suffix, but an RoHS compliant version is required, please contact Pulse for availability.
5. The temperature of the component (ambient plus temperature rise) must be within the stated operating temperature range.

Mechanical

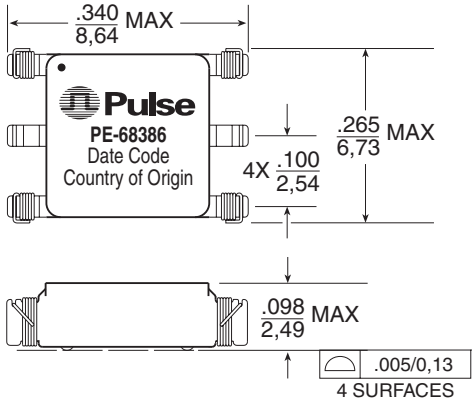

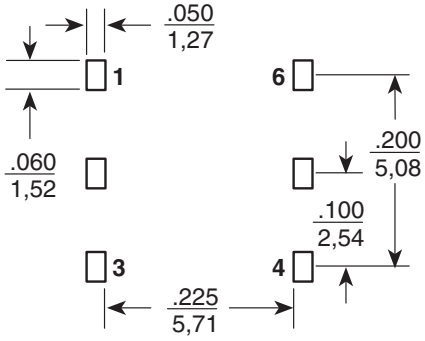

SUGGESTED PAD LAYOUT

Schematic

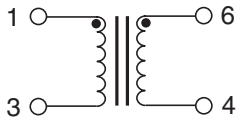

Weight . . . . . .0.28 grams
Tape & Reel 1500/reel
Tube 60/tube

Dimensions: Inches / mm

Unless otherwise specified, all tolerances are ± .010 / 0,25

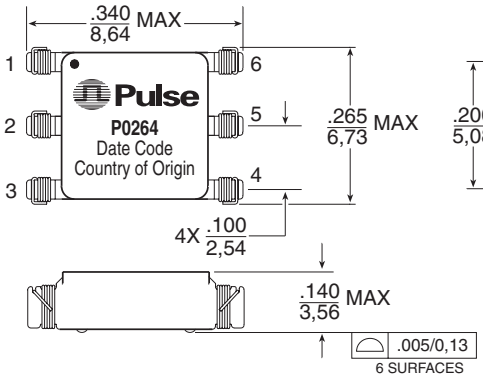

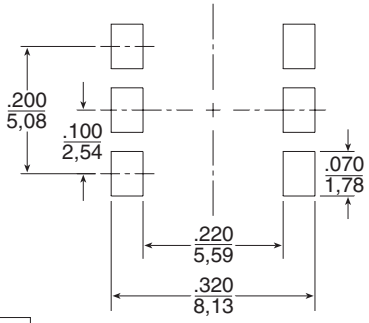

SUGGESTED PAD LAYOUT

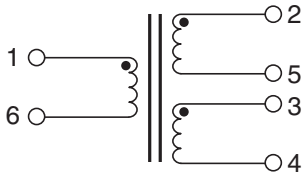

Weight . . . . . .0.23 grams
Tape & Reel 800/reel
Tube 75/tube

Dimensions: Inches / mm

Unless otherwise specified, all tolerances are ± .010 / 0,25

SMT GATE DRIVE TRANSFORMERS
1500VDC Basic and Operational Insulation

Pulse
A TECHNITROL COMPANY

Mechanicals

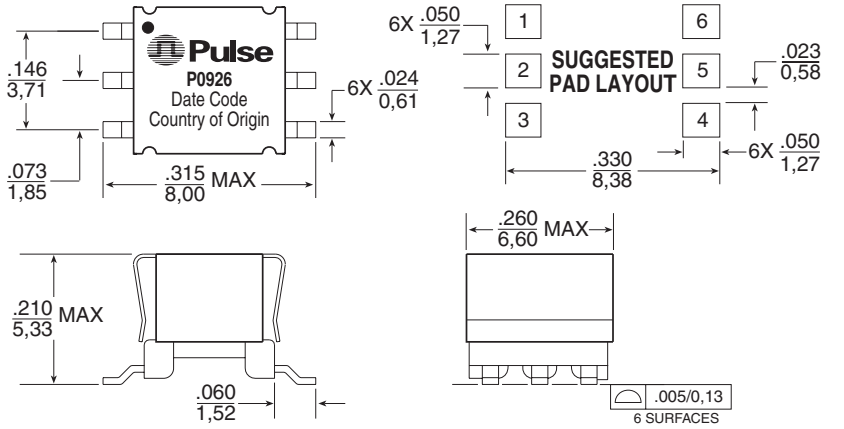

Schematics

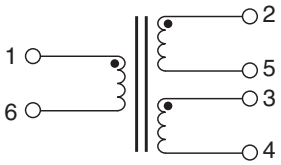

Weight . . . . . .0.48 grams
Tape & Reel 1000/reel
Tube 80/tube

Dimensions: Inches / mm

Unless otherwise specified, all tolerances are ± .010 / 0,25

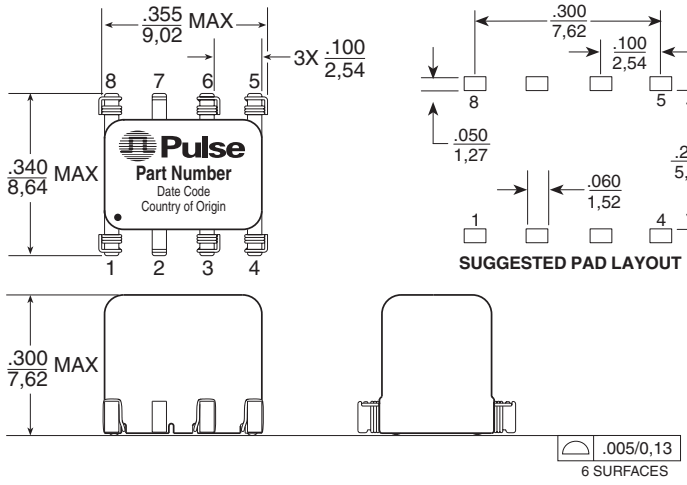

P0544 / PA0297 / PA0510

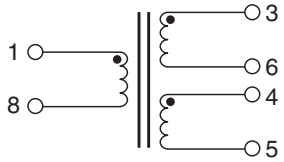

PA0184



Weight . . . . . .0.60 grams
Tape & Reel 400/reel
Tube 50/tube

Dimensions: Inches / mm

Unless otherwise specified, all tolerances are ± .010 / 0,25

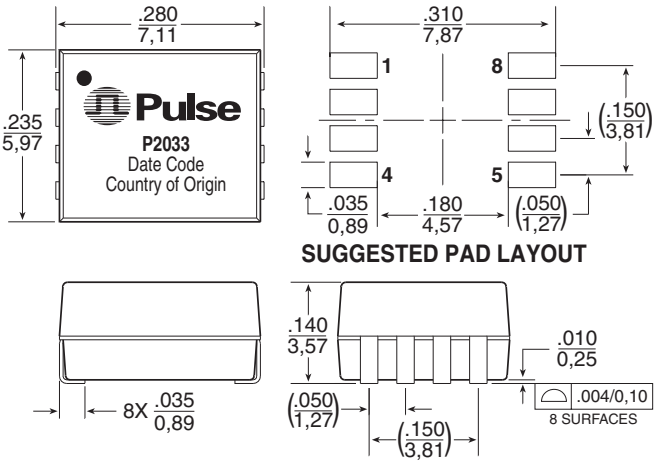

Weight . . . . . .0.29 grams
Tape & Reel 1200/reel
Tube 80/tube

Dimensions: Inches / mm

Unless otherwise specified, all tolerances are ± .010 / 0,25

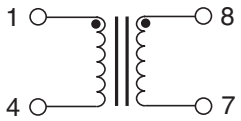

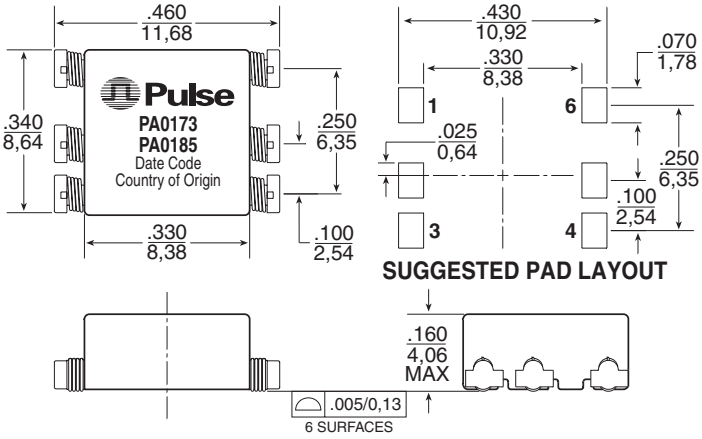

Dimensions: Inches / mm

Unless otherwise specified, all tolerances are ± .010 / 0,25

PA0173

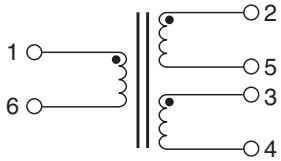

Weight . . . . . .0.48 grams
Tape & Reel 900/reel
Tube 60/tube

PA0185

