ATM 25 MBPS FILTER/ MAGNETIC MODULES AND TRANSFORMERS

For UTP and STP Surface Mount Applications

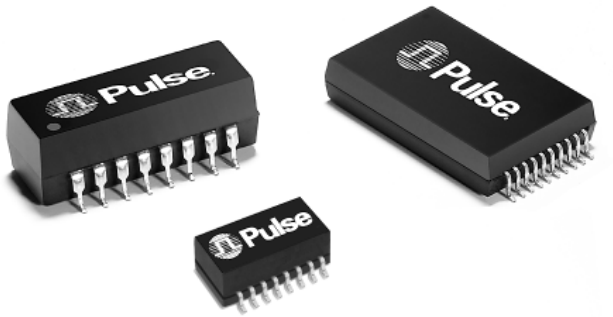

- Designed to meet ATM 25.6 PHY specifications including low frequency cutoff
- IC grade transfer-molded package withstands 235°C peak IR temperature profile
- Supports STP 150 Ω or UTP 100 Ω transmission cable (PE-67582 supports UTP cable)

Electrical Specifications @ 25° — Operating Temperature 0°C to 70°C

Part Number	Return Loss (dB MIN)		Insertion Loss (dB)					Comm-Comm Rejection (dB MIN)			Crosstalk (dB MIN)			Hipot (Vrms)
	1-17 MHz	17-25 MHz	12 KHz (MAX)	4 MHz (MAX)	16 MHz (MAX)	24 MHz (MAX)	36 MHz (MIN)	5 MHz	20 MHz	200 MHz	5 MHz	16 MHz	24 MHz	
PE-67583	-16	-9.0	-3.0	-0.6	-1.0	-1.8	-10	-20	-25	-20	-50	-50	-46	600
PE-67588	TRANSMIT													600
	-12	-8.0	-3.0	-1.1	-1.5	-1.8	-25	-60	-40	-20	-50	-44	-40	
	RECEIVE													
	-15	-10	-3.0	-3.1	-3.1	-3.7	—	-60	-40	-15	-50	-44	-40	
PE-67582	-15	-9.0	-1.5	—	-0.7	-1.5	-3.0	—	—	—	—	-45	-40	1500

PE-67582	Turns Ratio	OCL (µH MIN)	Interwinding Capacitance Cww (pF MAX)	Leakage Inductance L_L (µH MAX)	DC Resistance DCR (Ω MAX)
	1:1, 1:CT:1	3000	55	1.6	1.3

Description

PE-67583

The PE-67583 Dual Channel Interface Module provides filtering, impedance matching and common mode suppression. This module is compatible with various ATM 25.6 tranceivers: TI 380C30/60, IDT 77105, and Transwitch ALI-25T. The module provides impedance matching to 100 Ω unshielded twisted pair (UTP) or 150 Ω shielded twisted pair (STP) media.

PE-67588

The PE-67588, dual channel interface module, provides voltage suppression, filtering, impedance matching and common mode suppression. It is compatible with the NEC µPD98408 3.3V six port transceiver. Six PE-67588 modules are required for implementing the six channel capability of the transceiver. The module provides impedance matching to 100 Ω UTP or 150 Ω STP media.

PE-67582

The PE-67582 Pulse transformer is compatible with the SEEQ 93C95 PHY interface. The transformer provides impedance matching for 100 Ω UTP applications.

ATM 25 MBPS FILTER/ MAGNETIC MODULES AND TRANSFORMERS

For UTP and STP Surface Mount Applications

PE-67583

Mechanical

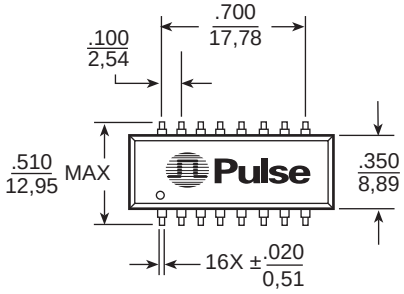

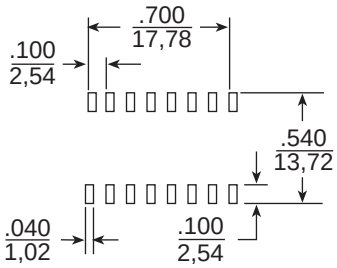

SUGGESTED PAD LAYOUT

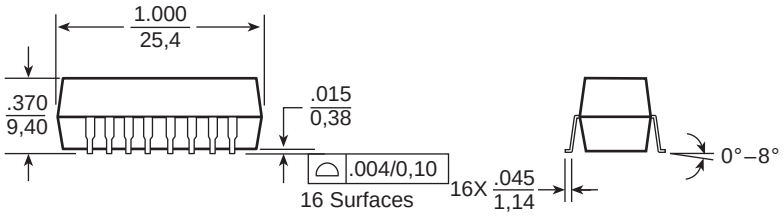

Schematic

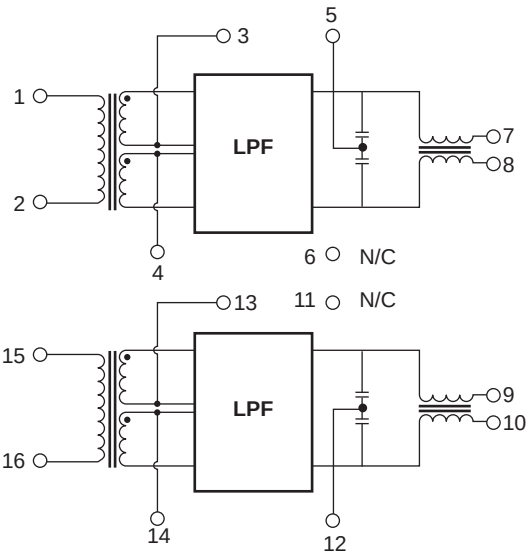

Dimensions: Inches / mm

Unless otherwise specified, all tolerances are ± .010 / 0,25

Weight . . . . . .4.0 grams
Tape & Reel 160/reel
Tube 20/tube

PE-67588

Mechanical

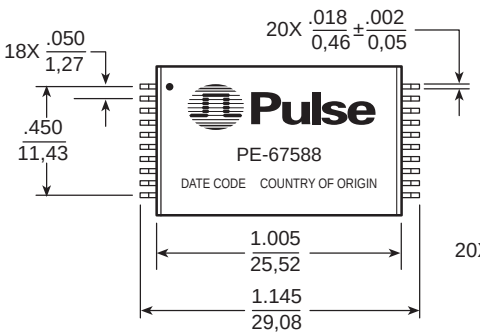

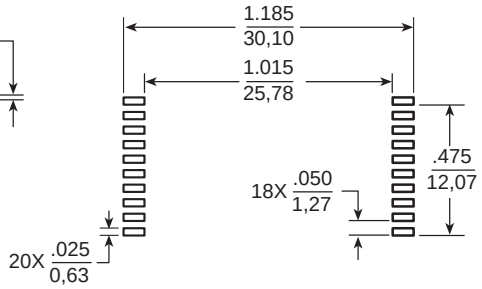

SUGGESTED PAD LAYOUT

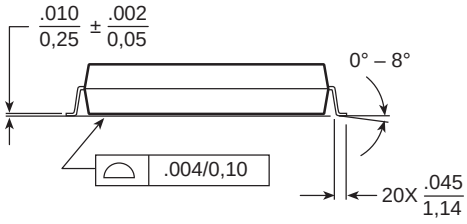

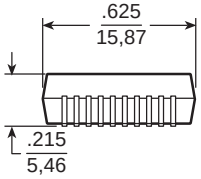

Dimensions: Inches / mm

Unless otherwise specified, all tolerances are ± .010 / 0,25

Weight . . . . . .4.3 grams
Tape & Reel 160/reel
Tube 20/tube

ATM 25 MBPS FILTER/ MAGNETIC MODULES AND TRANSFORMERS

For UTP and STP Surface Mount Applications

PE-67588

Schematic

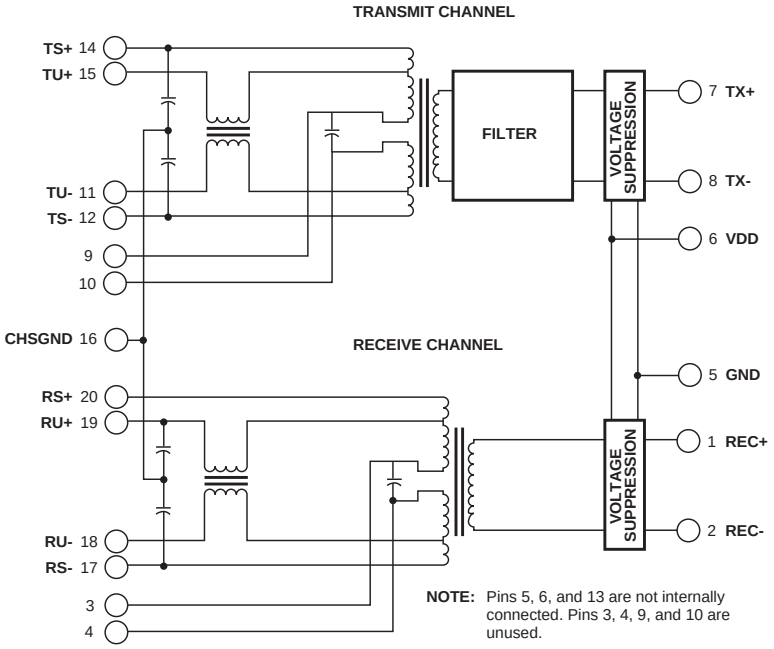

NOTE: Pins 5, 6, and 13 are not internally connected. Pins 3, 4, 9, and 10 are unused.

PE-67582

Mechanical

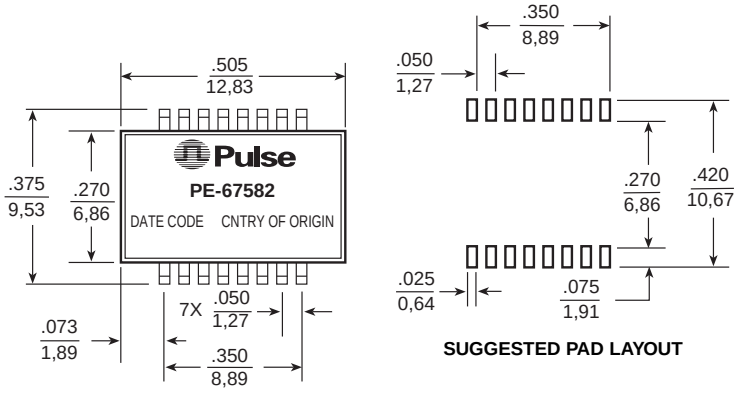

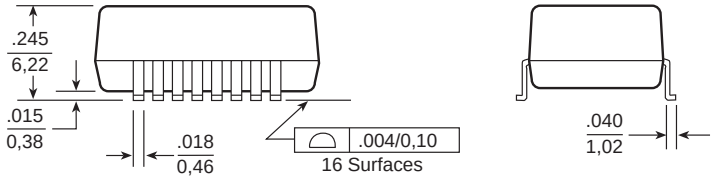

Schematic

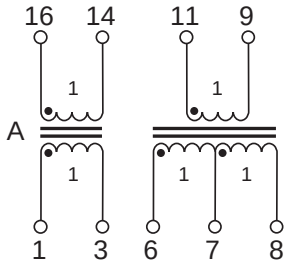

Weight . . . . . .1.1 grams
Tape & Reel 900/reel
Tube 40/tube

Dimensions: Inches / mm

Unless otherwise specified, all tolerances are ± .010 / 0,25

ATM 25 MBPS FILTER/ MAGNETIC MODULES AND TRANSFORMERS

For UTP and STP Surface Mount Applications

Application Notes

A typical ATM 25.6 application circuit is shown. The suggested application circuit supports operation over shielded twisted pair or unshielded twisted pair media. Note that both channels are identical in the PE-67583.

The components and guidelines in this note should serve as a starting point for design. The circuit and layout of an ATM 25.6 interface requires that special attention be given to the selection of components and their placement to reduce induced noise. The optimum external circuit values are dependent upon the individual layout, operating conditions, and specific cabling requirements. Pulse transformers are designed for use in ATM 25.6 Mbps applications that require a low frequency cutoff below 12 KHz.

It is important not to connect both UTP and STP media simultaneously. The module has been optimized to support only one media connection at a time.

Application Circuit

PE-67583

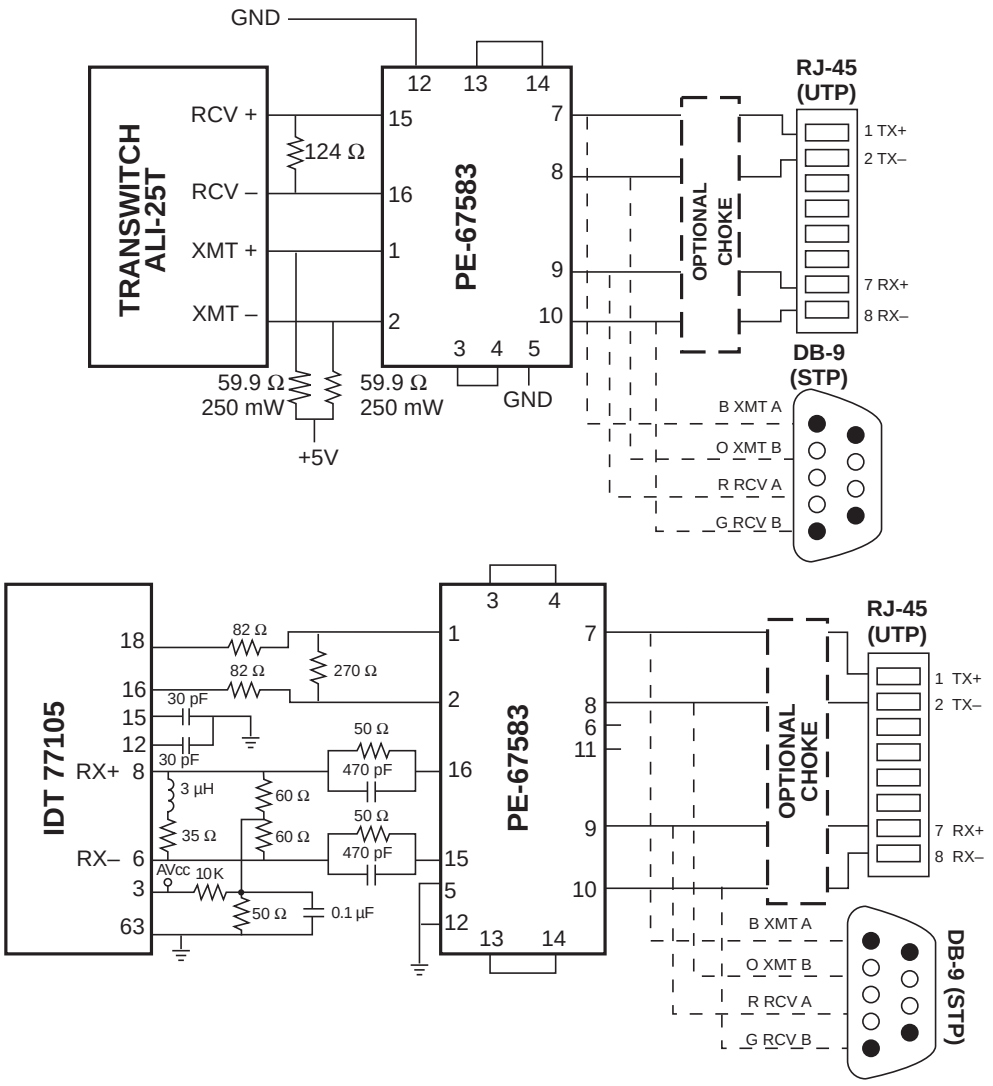

A typical user termination is shown using an IDT 77105. All grounds shown are analog grounds.

ATM 25 MBPS FILTER/ MAGNETIC MODULES AND TRANSFORMERS

For UTP and STP Surface Mount Applications

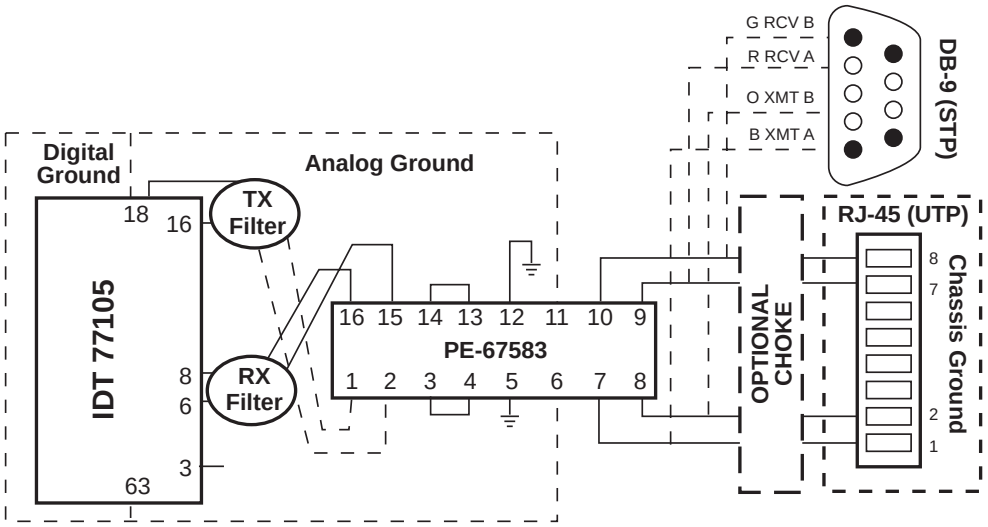

Notes:

1. Connect analog and digital power/ground planes at pins 3 and 63 of the IDT 77105.
2. Run dotted transmit traces on the back side of the PCB.
3. For a network termination, transpose the transmit and receive traces between the IDT 77105 and the PE-67583.

A suggested layout guide for the circuit depicted on previous page

PE-67588

Application Circuit

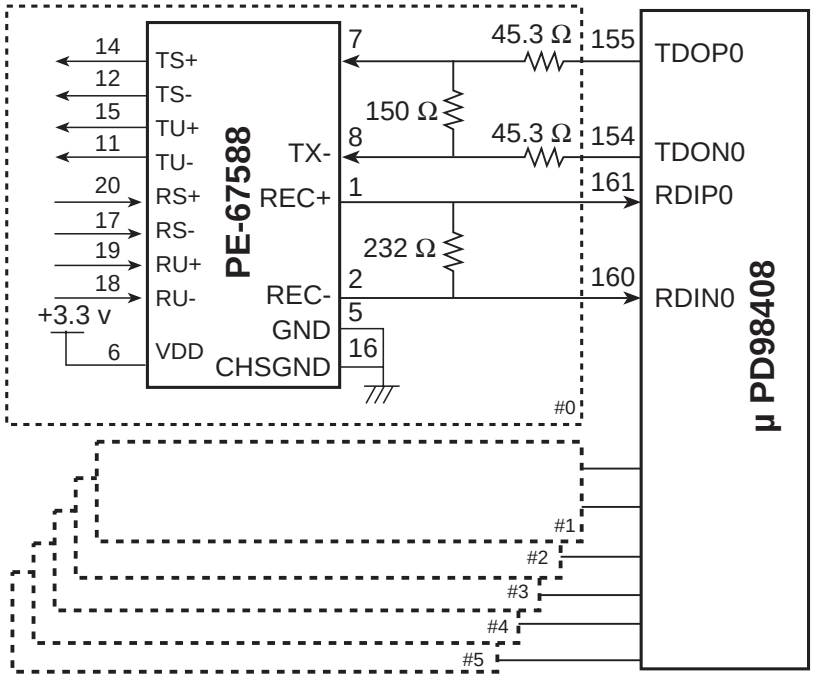

ATM 25 MBPS FILTER/ MAGNETIC MODULES AND TRANSFORMERS

For UTP and STP Surface Mount Applications

PE-67588

Pin Description

Pin Name	Pin No.	I/O	Function
TU+/TU-	15, 11	O	Transmit data output to UTP (balanced signal). Connect to transmit data pins of the UTP connector. When connecting to STP, these pins are open.
TS+/TS-	14, 12	O	Transmit data output to the STP (balanced signal). Connect to transmit data pins of the STP connector. When connecting to UTP, these pins are open.
TX+/TX-	7, 8	I	Transmit data input to UTP (balanced signal). Connect to DRVOPn/DRVONn pins. The polarity of positive/negative is free.
RU+/RU-	19, 18	I	Receive data input from the UTP (balanced signal). Connect to receive data pins of the UTP connector. When connecting to STP, these pins are open.
RS+RS-	20, 17	I	Receive data input from the STP (balanced signal). Connect to transmit data pins of the STP connector. When connecting to UTP, these pins are open.
REC+/REC-	1, 2	O	Receive data output (balanced signal). Connect to the RDIPn/RDINn pins. The polarity of positive/negative is free.

PE-67582

Application Circuit

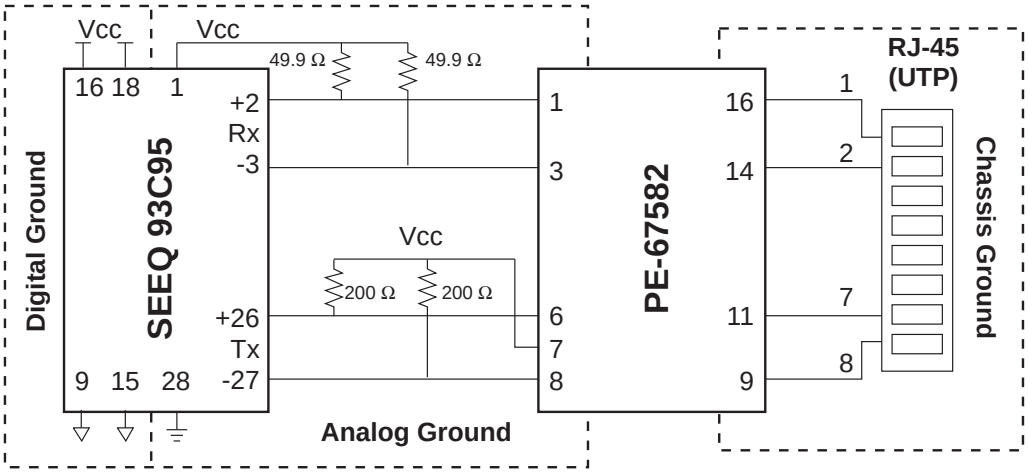

For More Information :

Corporate
12220 World Trade Drive
San Diego, CA 92128
Tel: 619 674 8100
FAX: 619 674 8262
http://www.pulseeng.com
Quick-Facts: 619 674 9672

Europe
Dunmore Road
Tuam
County Galway
Ireland
Tel: 353 93 24107
FAX: 353 93 24459

Asia
P.O. Box 26-11, KEPZ
6 Central Sixth Road
KEPZ, Kaohsiung
Taiwan, R.O.C.
Tel: 886 7 821 3141
FAX: 886 7 841 9707

Distributor

Performance warranty of products offered on this data sheet is limited to the parameters specified. Data is subject to change without notice. Other brand and product names metioned herein may be trademarks or registered trademarks of their respective owners.

Printed on recycled paper. ©1996, Pulse Engineering, Inc.