LAN ISOLATION TRANSFORMER CATALOG

Pulse
A TECHNITROL COMPANY

TABLE of CONTENTS

ISOLATION TRANSFORMERS

10BASE-T FOR ADAPTER CARDS, MAUs, HUBS AND MOTHERBOARD APPLICATIONS

Electrical Specifications: Surface Mount and Through Hole 2

ETHERNET AUI TRANSFORMERS

Electrical Specifications: Surface Mount and Through Hole 3

APPLICATION CIRCUITS

10Base-T 4

Ethernet 5

SCHEMATICS 6

MECHANICALS

Surface Mount 8

Through Hole 10

ISOLATION TRANSFORMERS FOR 10BASE-T

For Adapter Cards, MAUs, Hubs, and Motherboard Applications

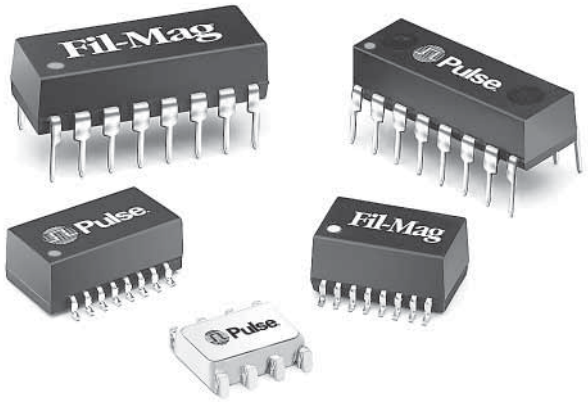

- Meets IEEE 802.3 specification
- Available with common mode chokes for EMI suppression
- Through hole, auto-insertable, 16-pin DIP package

Electrical Specifications @ 25°C — Operating Temperature 0°C to 70°C

Part [2] Number	Turns Ratio (±5%)		Primary Pins	Common Mode Choke	Sine Wave Inductance OCL (µH MIN)	Interwinding Capacitance Cww[1] (pF MAX)	Leakage Inductance LL[1] (µH MAX)	DCR (Ω MAX)	Hipot (Vrms)	Schem.	Mech
	Transmit	Receive									
SURFACE MOUNT [2]										PAGES 6-7	PAGES 8-9
23Z128SM	1CT:1.414CT	1CT:1CT	6-8/1-3	—	200	15	0.5	0.4	2000	T4	SMT5
23Z356SM	1CT:1.414CT	1CT:1CT	6-8/1-3	✓	200	12	0.5	0.6	2000	T7	SMT5
23Z467SM	1CT:2CT	1CT:1CT	6-8/1-3	✓	140	12	0.2	0.6	2000	T7	SMT5
E2023 [4]	1CT: 2.5CT	1CT: 1CT	6-8/1-3	✓	200	15	0.5	0.4	2000	T10	SMT4
E4001	1CT:2CT	1CT:1CT	6-8/1-3	✓	112	8	0.3	0.8	3000	T5	SMT4
EX2024 [3]	1CT: 2.5CT	1CT:1CT	6-8/1-3	✓	350	30	0.8	0.6	2000	T10	SMT4
PE-65454	1:1.414	1:1	3-4/1-2	—	140	12	0.2	0.4	2000	T1	SMT2
PE-65745	1CT: 1.414CT	1CT:1CT	6-8/1-3	—	140	12	0.2	0.3	1500	T4	SMT4
PE-68023	1CT:2CT	1CT:1CT	1-3/6-8	✓	200	12	0.3	1.0	1500	T6	SMT4
PE-68048	1CT: 1.414CT	1CT:1CT	6-8/1-3	✓	110	15	0.4	1.0	1500	T5	SMT4
PE-68052	2CT:1CT	1CT:1CT	1-3/6-8	✓	140	12	0.3	1.0	1500	T6	SMT4
PE-68810	—	1:1 (4X)	1-2/3-4	—	140	12	0.2	0.4	2000	T3	SMT4
PE-68820	1:1.414 (4X)	—	1-2/3-4 5-6/7-8	—	40	12	0.2	0.4	2000	T3	SMT4
THROUGH HOLE										PAGE 6	PAGE 10
23Z128	1CT: 2CT	1CT:1CT	6-8/1-3	—	140	15	0.5	0.4	2000	T4	TH3

1. **OCL, Cww** and **LL** are measured at 20 mVrms, 100 kHz.
2. **For** Tape & Reel packaging, add the suffix **"T"** to the end of the part number when ordering. e.g. E2023**T.**
3. **Part** numbers denoted "**EX"** are extended temperature parts -40°C to 85°C, electrical specifications @ 25°C.
4. **E2023NL** is the RoHS compliant version of E2023.

ISOLATION TRANSFORMERS FOR ETHERNET

AUI Transformers

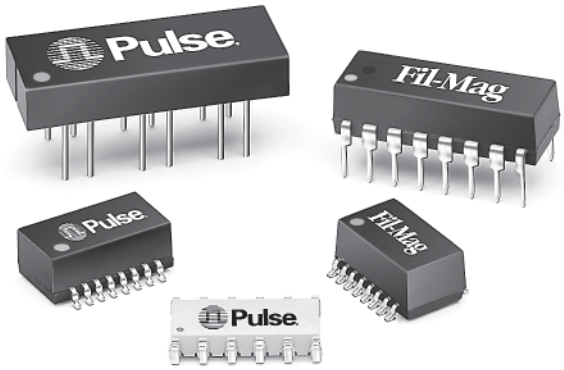

- Low leakage inductance and coupling capacitance for faster rise times
- Small form factor, 50 mil lead spacing
- Through hole, auto-insertable, 16-pin DIP package

Electrical Specifications @ 25°C — Operating Temperature 0°C to 70°C

Part Number[3]	Turns Ratio (±5%)	Primary Pins	Primary Sine Wave OCL[1] (µH ±20%)	Primary ET-Constant (V-µs MIN)	Rise Time[2] (ns MAX)	Interwinding Capacitance Cww[1] (pF MAX)	Leakage Inductance L_L[1] (µH MAX)	DCR (Ω MAX)	Schem.	Mech.	Hipot (Vrms)
SURFACE MOUNT[3]									PAGE 6	PAGES 8-9	
23Z90SM	1:1	1-2/4-5/7-8	75	2.4	3.0	10	0.20	0.20	T2	SMT5	2000
23Z91SM	1:1	1-2/4-5/7-8	100	2.4	3.0	10	0.20	0.30	T2	SMT5	2000
23Z108SM[5]	1:1	1-2/4-5/7-8	350	2.5	3.5	16	0.30	0.35	T2	SMT5	2000
PE-65723	1:1	1-2/4-5/7-8	75	1.8	3.0	8	0.20	0.30	T2	SMT4	2000
PE-65727	1:1	1-2/4-5/7-8	150	1.2	3.0	12	0.20	0.30	T2	SMT4	2000
PE-65728	1:1	1-2/4-5/7-8	100	1.8	3.0	9	0.20	0.30	T2	SMT4	2000
THROUGH HOLE									PAGES 6	PAGE 9-10	
PE-64108	1:1	1-2/4-5/7-8	100	2.1	3.5	10	0.25	0.40	T2	TH2	2000
PE-64109	1:1	1-2/4-5/7-8	150	3.0	3.0	15	0.20	0.45	T2	TH2	2000

1. OCL, C_{WW} and L_L are measured at 20 mVrms, 100 kHz.
2. Rise time is measured in 75 Ω systems.
3. For Tape & Reel packaging, add a suffix "T" to the end of the part number when ordering. e.g. PE-65723T.

Typical Application Circuit

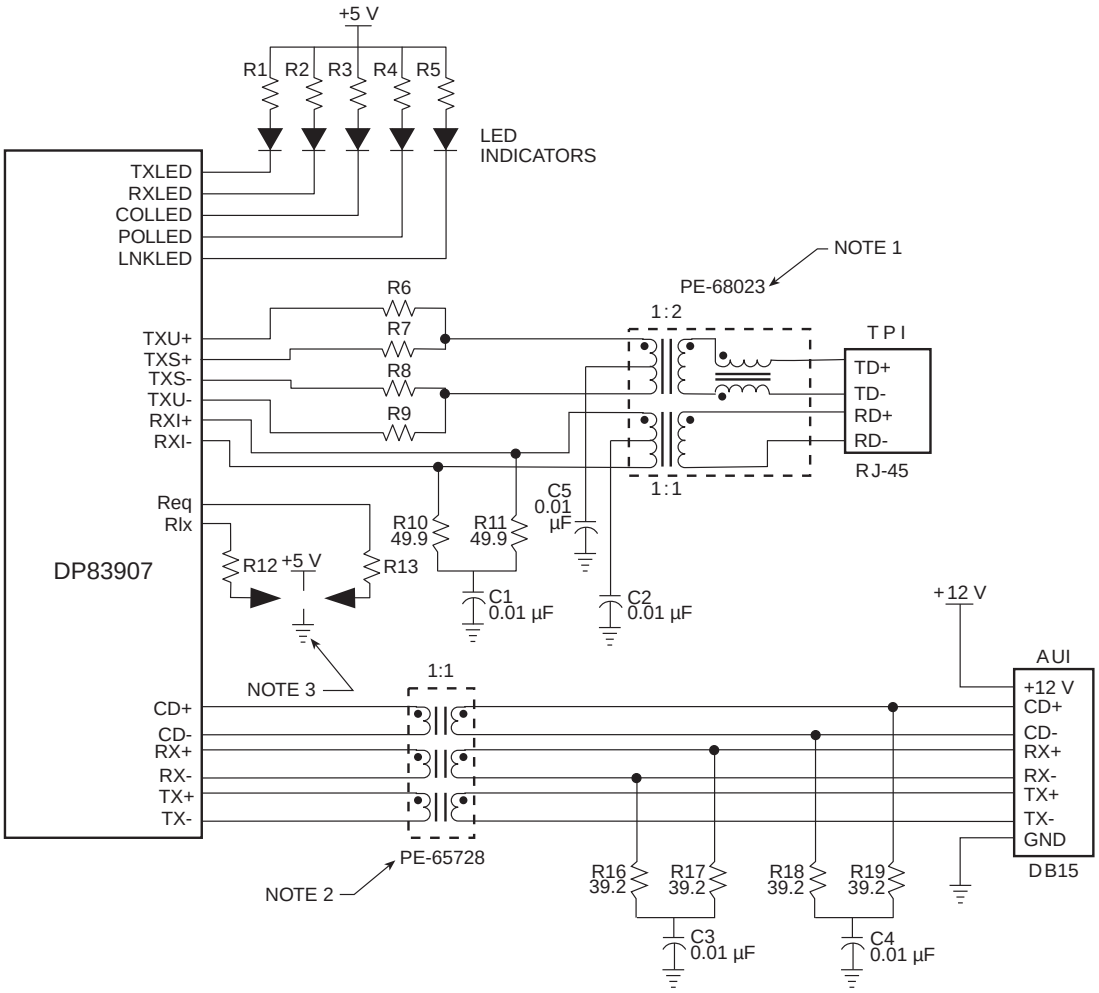

NOTES:
1. Connections at pins 12 and 13 apply to PE-68023 only. These are test points. Do not ground.
2. For specific information, see pages 2 and 3 in this catalog.
3. For specific connection, refer to National's Application Notes.

Typical 10Base-T Application Circuit

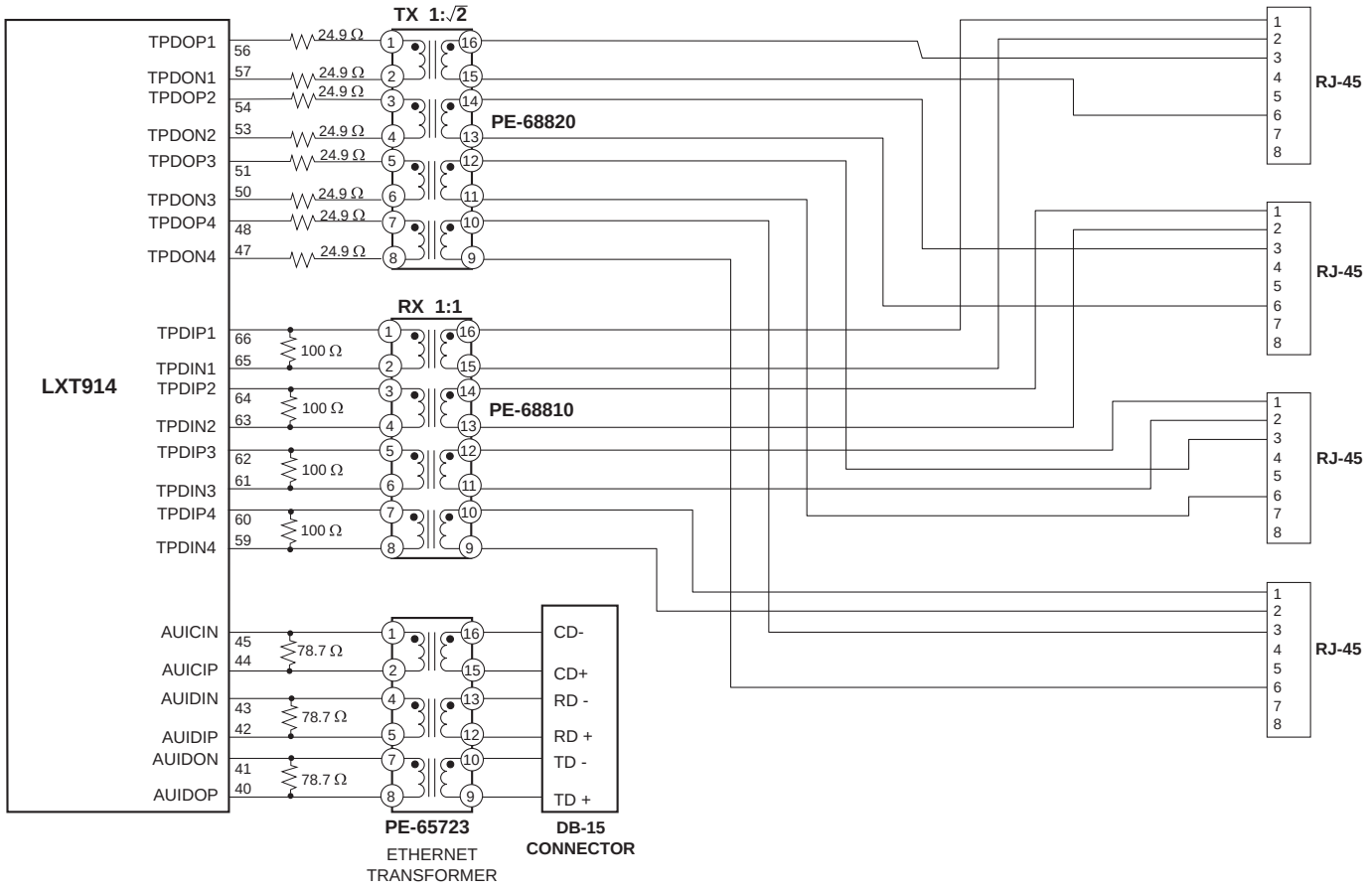

Schematics

T1

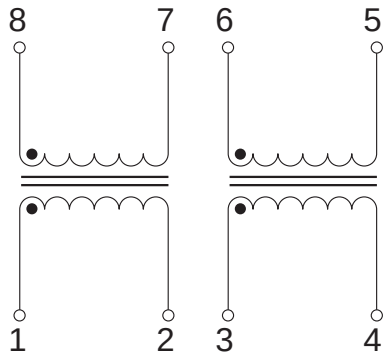

T2

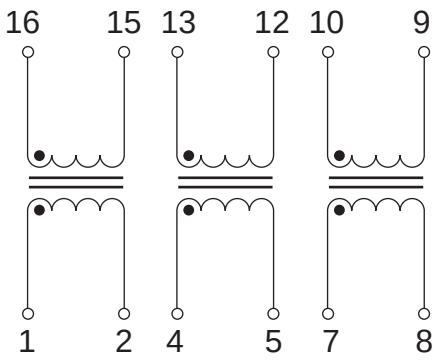

T3

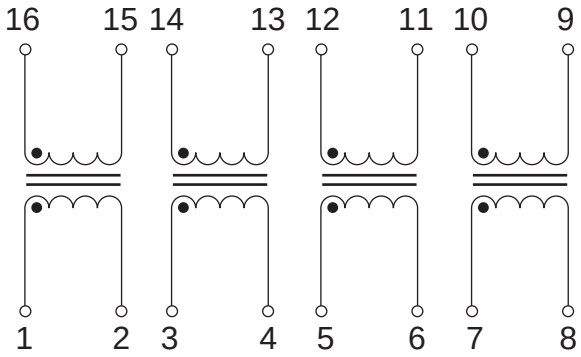

T4

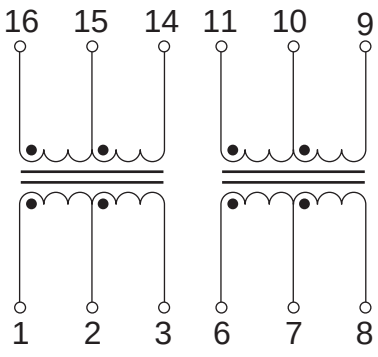

Schematics *(continued)*

T5

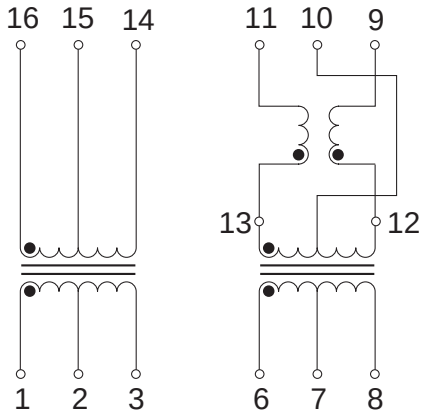

T6

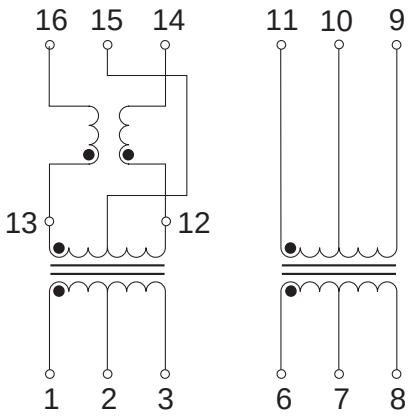

T7

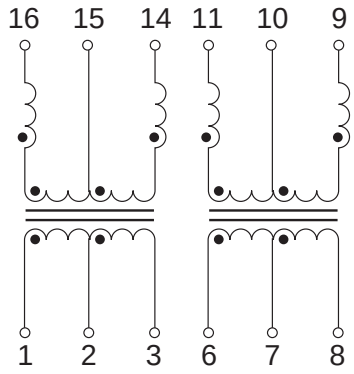

T10

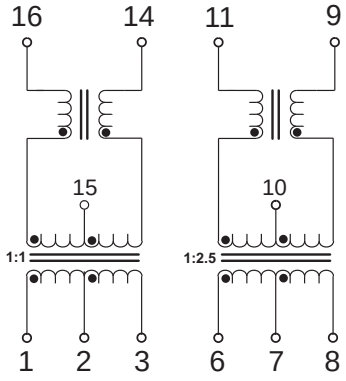

PINS 4, 5, 12 AND 13 NOT CONNECTED.

Surface Mount Mechanicals

SMT2

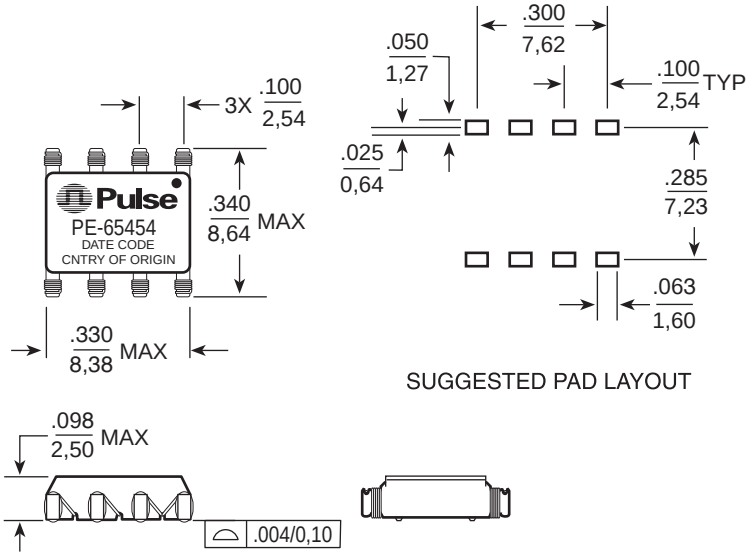

Dimensions: Inches / mm

Unless otherwise specified, all tolerances are ± .010 / 0,25

Weight . . . . . 0.22 grams
Tube 60/tube
Tape & Reel 1500/reel

SMT4

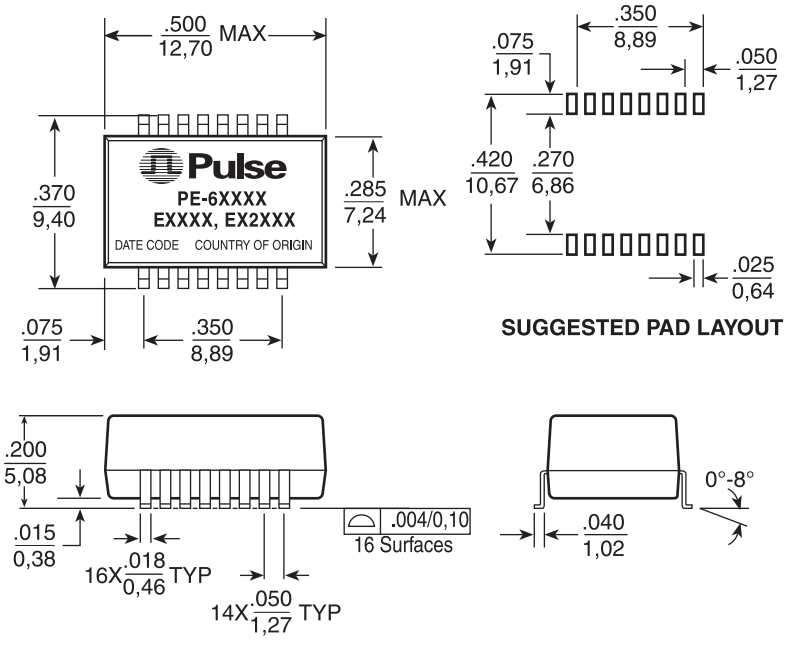

Dimensions: Inches / mm

Unless otherwise specified, all tolerances are ± .010 / 0,25

Weight . . . . . 0.82 grams
Tube 40/tube
Tape & Reel 900/reel

Through Hole Mechanicals - (*continued*)

SMT5

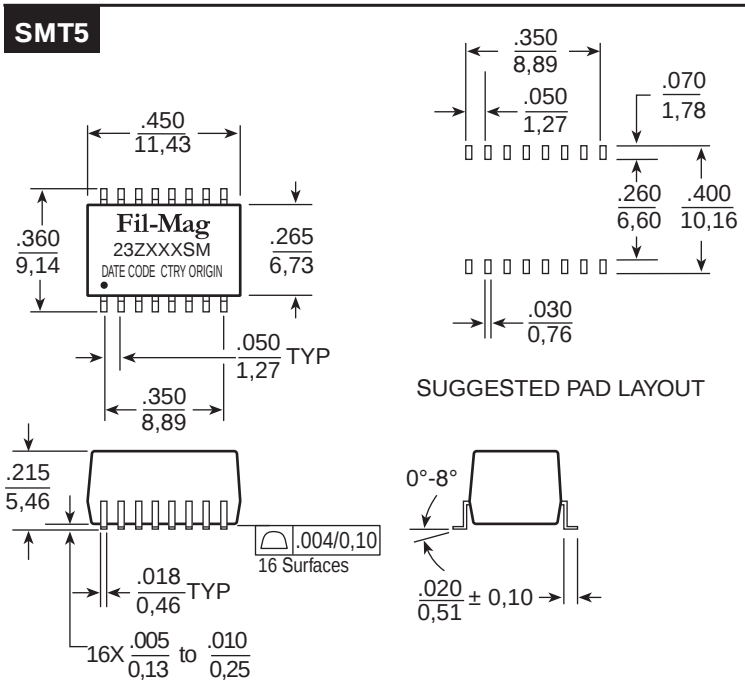

Dimensions: Inches / mm

Unless otherwise specified, all tolerances are ± .005 / 0,13

Weight . . . . . .0.85 grams
Tube 50/tube
Tape & Reel 750/reel

Through Hole Mechanicals

TH1

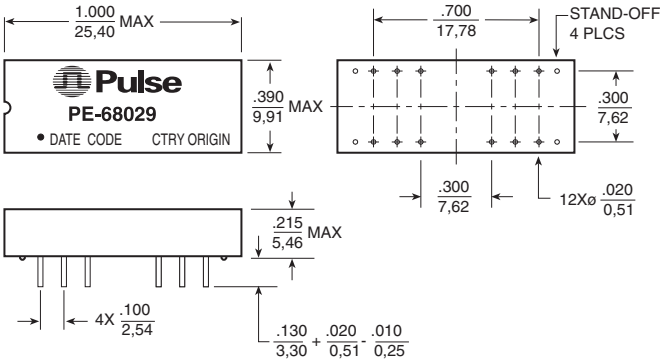

Weight . . . . . .2.17 grams
Tube 20/tube

TH2

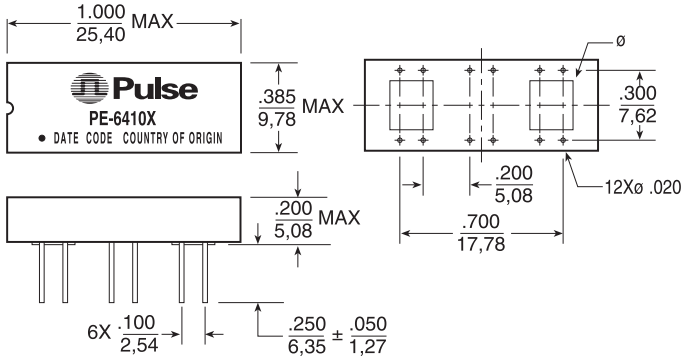

Weight . . . . . .2.18 grams
Tube 20/tube

Dimensions: Inches / mm Unless otherwise specified, all tolerances are ± .010 / 0,25

Through Hole Mechanicals - *contnued*

TH3

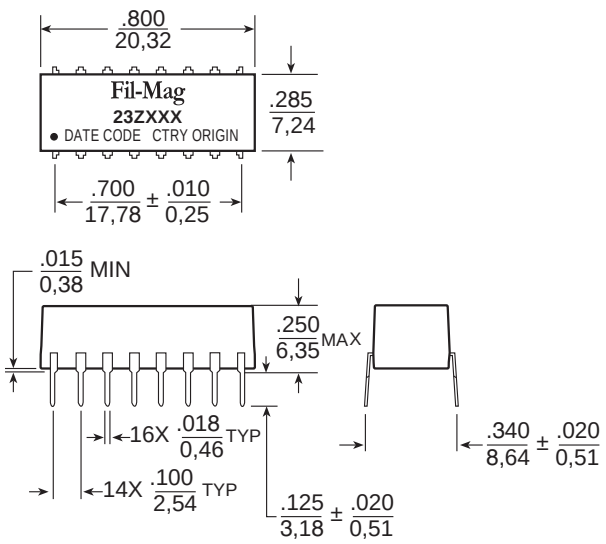

Weight . . . . . .1.7 grams
Tube 28/tube

Dimensions: Inches / mm

Unless otherwise specified, all tolerances are ± .005 / 0,13

TH4

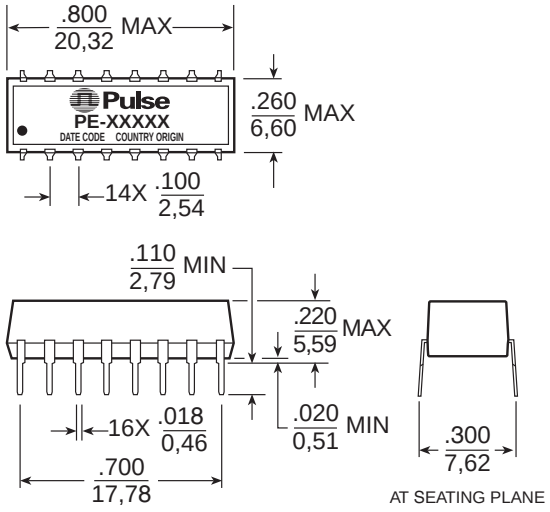

Dimensions: Inches / mm

Unless otherwise specified, all tolerances are ± .010 / 0,25

For More Information:

Pulse Worldwide Headquarters
12220 World Trade Dr.
San Diego, CA 92128
U.S.A.

www.pulseeng.com
Tel: 858 674 8100
Fax: 858 674 8262

Pulse Europe
Einsteinstrasse 1
D-71083 Herrenberg
Germany

Tel: 49 7032 7806 0
Fax: 49 7032 7806 135

Pulse China Headquarters
B402, Shenzhen Academy of Aerospace Technology Bldg.
10th Kejinan Rd.
High-Tech Zone
Nanshan District
Shenzen, PR China 518057
TEL: 86 755 33966678
FAX: 86 755 33966700

Pulse North China
Room 1503
XinYin Building
No. 888 YiShan Rd.
Shanghai 200233
China

Tel: 86 21 54643211/2
Fax: 86 21 54643210

Pulse South Asia
135 Joo Seng Rd.
#03-02
PM Industrial Bldg.
Singapore 368363

TEL: 65 6287 8998
FAX: 65 6280 0080

Pulse North Asia
No. 26, Kao Ching Rd.
Yang Mei Chen
Taoyuan Hsien
Taiwan
R. O. C.

Tel: 886 3 4643715
Fax: 886 3 4641911

Performance warranty of products offered on this data sheet is limited to the parameters specified. Data is subject to change without notice. Other brand and product names mentioned herein may be trademarks or registered trademarks of their respective owners.
© Copyright, 2009. Pulse Engineering, Inc. All rights reserved.