THT/SMT POWER INDUCTORS

Toroid - Designed for National's 150kHz Simple Switcher™

Pulse
A TECHNITROL COMPANY

RoHS COMPLIANT



- Tested and recommended by National Semiconductor
- Base material meets flammability requirements of UL 94V-0
- Available in surface mount and through hole versions

Electrical Specifications @ 25°C— Operating Temperature -40° to +130° C [7]

Pulse [6] THT Part Number	Pulse [5,6] SMT Part Number	National Part Number	In Circuit Operating Parameters [1]			Nominal DCR (Ω)	Package		
			Nominal Inductance (µH)	Rated Current (ADC)	Max [2] ETOP (V-µSec)		Through Hole	Surface Mount	Lead Diameter
PE-53801	PE-53801S	LM259X-L1	259	0.13	23.1	3.4	LP-25	LCI-20	—
PE-53802	PE-53802S	LM259X-L2	178	0.16	16.5	2.8	LP-25	LCI-20	—
PE-53803	PE-53803S	LM259X-L3	118	0.2	13.2	1.8	LP-25	LCI-20	—
PE-53804	PE-53804S	LM259X-L4	79	0.25	9.9	1.5	LP-25	LCI-20	—
PE-53805	PE-53805S	LM259X-L5	55	0.3	6.6	1.0	LP-25	LCI-20	—
PE-53806	PE-53806S	LM259X-L6	39	0.34	6.6	.80	LP-25	LCI-20	—
PE-53807	PE-53807S	LM259X-L7	26	0.45	6.6	.62	LP-25	LCI-20	—
PE-53808	PE-53808S	LM259X-L8	374	0.2	75.9	2.7	LP-30	LCI-30	—
PE-53809	PE-53809S	LM259X-L9	256	0.25	33	2.2	LP-30	LCI-30	—
PE-53810	PE-53810S	LM259X-L10	176	0.3	26.4	1.4	LP-30	LCI-30	—
PE-53811	PE-53811S	LM259X-L11	118	0.38	19.8	1.2	LP-30	LCI-30	—
PE-53812	PE-53812S	LM259X-L12	78	0.46	16.5	0.8	LP-30	LCI-30	—
PE-53813	PE-53813S	LM259X-L13	55	0.56	13.2	0.5	LP-30	LCI-30	—
PE-53814	PE-53814S	LM259X-L14	39	0.68	9.9	0.3	LP-30	LCI-30	—
PE-53815	PE-53815S	LM259X-L15	26	0.84	6.6	0.2	LP-30	LCI-30	—
PE-53816	PE-53816S	LM259X-L16	17	1.02	6.6	0.1	LP-30	LCI-30	—
PE-53817	PE-53817S	LM259X-L17	375	0.36	75.9	1.3	LP-37	LCI-37	—
PE-53818	PE-53818S	LM259X-L18	252	0.44	49.5	0.9	LP-37	LCI-37	—
PE-53819	PE-53819S	LM259X-L19	173	0.54	36.3	0.6	LP-37	LCI-37	—
PE-53820	PE-53820S	LM259X-L20	115	0.67	29.7	0.4	LP-37	LCI-37	—
PE-53821	PE-53821S	LM259X-L21	78	0.82	23.1	0.3	LP-37	LCI-37	—
PE-53822	PE-53822S	LM259X-L22	54	1.0	16.5	0.2	LP-37	LCI-37	—
PE-53823	PE-53823S	LM259X-L23	38	1.2	13.2	0.1	LP-37	LCI-37	—
PE-53824	PE-53824S	LM259X-L24	26	1.48	9.9	0.1	LP-37	LCI-37	—
PE-53825	PE-53825S	LM259X-L25	18	1.81	9.9	0.06	LP-37	LCI-37	—
PE-53826	PE-53826S	LM259X-L26	377	0.68	75.9	1.0	LP-44	LCI-44	—
PE-53827	PE-53827S	LM259X-L27	248	0.83	72.6	0.6	LP-44	LCI-44	—
PE-53828	PE-53828S	LM259X-L28	168	1.02	56.1	0.4	LP-44	LCI-44	—
PE-53829	PE-53829S	LM259X-L29	112	1.26	42.9	0.3	LP-44	LCI-44	—
PE-53830	PE-53830S	LM259X-L30	77	1.54	33	0.2	LP-44	LCI-44	—
PE-53831	PE-53831S	LM259X-L31	53	1.87	26.4	0.13	LP-44	LCI-44	—
PE-53932	PE-53932S	LM259X-L32	37	2.24	19.8	0.10	LP-44	LCI-44	—
PE-53933	PE-53933S	LM259X-L33	24	2.74	16.5	0.07	LP-44	LCI-44	—
PE-53934	PE-53934S	LM259X-L34	17	3.0	13.2	0.05	KM-1.0	LCI-44	.023
PE-53935	PE-53935S	LM259X-L35	250	1.5	72.6	0.23	KM-3.0	HCI-68	.023
PE-54036	PE-54036S	LM259X-L36	168	1.81	75.9	0.18	KM-3.0	HCI-68	.023
PE-54037	PE-54037S	LM259X-L37	114	2.22	62.7	0.10	KM-3.0	HCI-68	.025
PE-54038	PE-54038S	LM259X-L38	77	2.7	52.8	0.09	KM-3.0	HCI-68	.025
PE-54039	PE-54039S	LM259X-L39	53	3.0	42.9	0.08	KM-3.0	HCI-68	.025
PE-54040	PE-54040S	LM259X-L40	38	3.0	29.7	0.05	KM-3.0	HCI-68	.028
PE-54041	PE-54041S	LM259X-L41	25	3.0	19.8	0.04	KM-2.0	LCI-50	.028
PE-54042	—	LM259X-L42	167	2.5	75.9	0.14	KM-4.0	—	.028
PE-54043	—	LM259X-L43	121	3.0	75.9	0.09	KM-4.0	—	.031
PE-54044	PE-54044S	LM259X-L44	77	3.0	59.4	0.08	KM-3.0	HCI-68	.025
PE-53900	—	LM258X-L	19	4.5	32[3]	0.02	KM-3.0	—	.035

Notes :

1. Inductance values may vary ±20%.
2. ETop rated at 150kHz except where designated.
3. ETop rated at 100kHz.
4. SIMPLE SWITCHER™ is a trademark of National Semiconductor Corp.
5. For SMT parts, optional Tape & Reel packaging can be ordered by addin a "**T**" suffix to the part number (i.e. PE-53801S becomes PE-53801S**T**). Pulse complies to industry standard tape and reel specification EIA481.
6. RoHS compliant parts are being introduced. Please contact Pulse for RoHS compliant part availability. If available, order part by adding the suffix "**NL**" to the part number (i.e.PE-53801 becomes PE-53801**NL** and PE-53801T becomes PE-53801**NL**T).
7. The temperature of the component (ambient plus temperature rise) must be within the stated operating temperature range.

THT/SMT POWER INDUCTORS
Toroid - Designed for National's 150kHz Simple Switcher™

Pulse
A TECHNITROL COMPANY

Mechanicals

LP Series

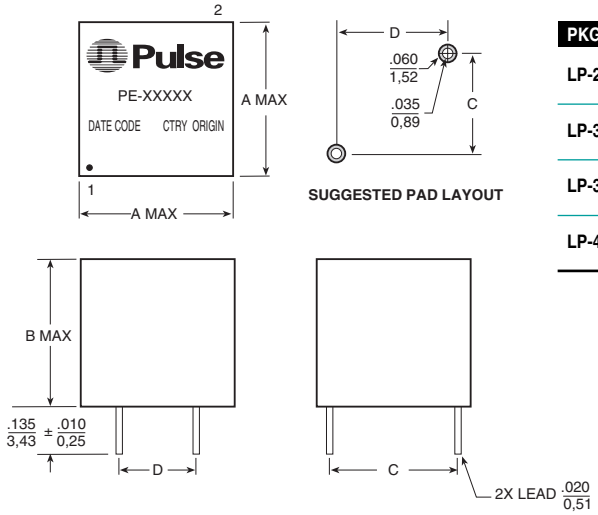

PKG	A	B	C	D
LP-25	.360 9,14	.310 7,87	.250 6,35	.250 6,35
LP-30	.400 10,16	.300 7,62	.300 7,62	.300 7,62
LP-37	.495 12,57	.375 9,52	.375 9,52	.375 9,52
LP-44	.635 16,13	.365 9,27	.500 12,7	.300 7,62

KM Series

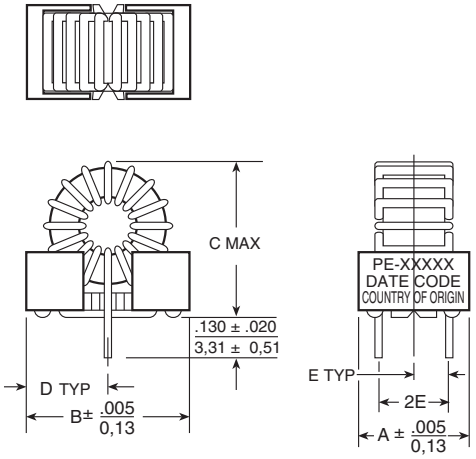

PKG	A	B	C	D	E
KM-1.0	.340 8,64	.580 14,73	.650 16,51	.290 7,37	.110 2,79
KM-2.0	.450 11,43	.650 16,51	.700 17,73	.325 8,26	.150 3,81
KM-3.0	.450 11,43	830 21,08	.950 24,13	.415 10,54	.150 3,81
KM-4.0	.610 15,50	.970 24,64	1.10 27,94	.475 12,07	.225 5,72

LCI Series

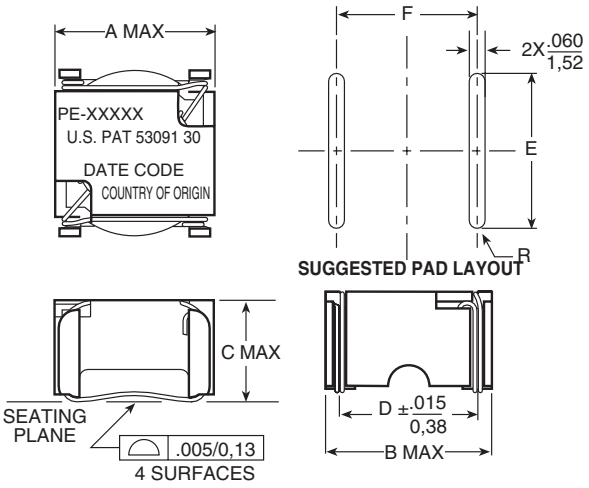

Notes:
1. Dimension "D" is measured across terminal blocks only.
2. Coil must clear seating plane by .010 / 0,25 MIN.

PKG	A	B	C	D	E	F
LCI-20	.340 8,64	.340 8,64	.270 6,86	.260 6,60	.300 7,62	.270 6,86
LCI-30	.435 11,05	.440 11,18	.360 9,14	.350 8,89	.400 10,16	.360 9,14
LCI-37	.565 14,35	.570 14,48	.360 9,14	.450 11,43	.520 13,21	.460 11,68
LCI-44	.600 15,24	.620 15,75	.390 9,91	.500 12,7	.550 13,97	.510 12,95
LCI-50	.670 17,02	.700 17,78	.390 9,91	.580 14,73	.620 15,75	.590 14,99

HCI-68

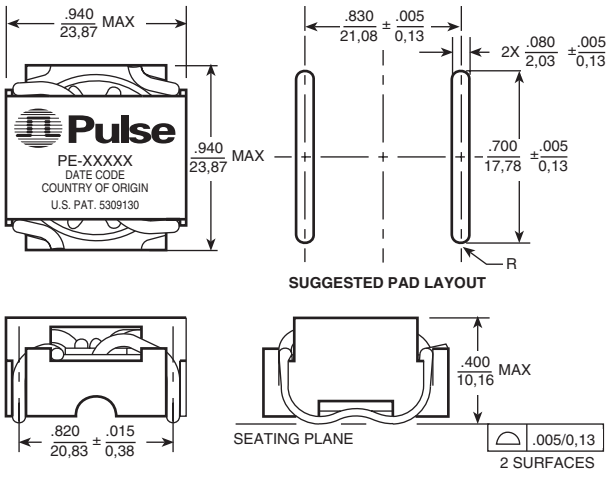

Note:
Coil must clear seating plane by .010 / 0,25 MIN

Dimensions: Inches / mm

Unless otherwise specified, all tolerances are ± .010 / 0,25