SMT Power Inductors

Toroid - SLIC Series

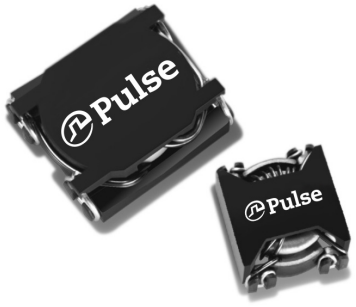

- *Fifteen package sizes*
- *Current Rating: up to 23.8A$_{DC}$*
- *Frequency Range: up to 1MHz*

Electrical Specifications @ 25°C - Operating Temperature -40°C to +130°C[6]									
Pulse[4,5] Part Number	Inductance @ Irated (µH)	Irated (A)	DCR (mΩ)		Inductance @ 0A$_{DC}$ (µH)	Reference ET (Volt -µsec)	Flux Density Factor (K1)	Core Loss Factor (K2)	Temp. Rise Factor (K3)
			TYP	MAX					
LCI-20									
PE-53630NL	1.01	3.40	9.35	11	1.1	0.53	5.43	3.29E-11	323.9
PE-53600NL	6.2	1.40	59.5	70	7	1.33	2.17	3.29E-11	323.9
PE-53601NL	17.6	1.00	106.25	125	22.7	2.4	1.21	3.29E-11	323.9
LCI-30									
PE-53650NL	3.8	4.80	14.705	17.3	5.2	1.76	1.28	1.39E-10	148.0
PE-53631NL	9.4	2.80	36.89	43.4	12.3	2.7	0.83	1.39E-10	148.0
PE-53602NL	29.7	1.40	141.1	166	35.3	4.6	0.49	1.39E-10	148.0
PE-53606NL	114	0.94	365	405	167	10	0.23	1.39E-10	148.0
LCI-37									
PE-53661NL	2.5	8.00	7.055	8.3	3.8	1.77	1.30	1.87E-10	114.2
PE-53651NL	5.1	5.40	15.045	17.7	7.5	2.51	0.92	1.87E-10	114.2
PE-53632NL	16.2	2.70	63	72	21.9	4.29	0.54	1.87E-10	114.2
PE-53604NL	58.1	1.30	246.5	290	73	7.83	0.29	1.87E-10	114.2
PE-53608NL	192	0.90	476	560	292	15.7	0.15	1.87E-10	114.2
PE-53611NL	383	0.72	732.7	862	672	23.5	0.10	1.87E-10	114.2
LCCI-20									
PE-53717NL	43.6	1.1	247.2	309	77	7.83	0.295	1.87E-10	114.23
LCI-44									
PE-53662NL	4.9	7.80	10.54	12.4	7.9	3.04	0.67	3.35E-10	85.7
PE-53652NL	9	5.50	25	28	14	4.06	0.51	3.35E-10	85.7
PE-53633NL	29.1	2.70	85	100	40.5	6.9	0.30	3.35E-10	85.7
PE-53613NL	645	0.74	1062.5	1250	1134	36.5	0.06	3.35E-10	85.7
HCI-37									
PE-53690NL	0.81	14.30	2.125	2.5	1.25	1.035	2.23	1.87E-10	114.2
PE-53680NL	1.32	11.50	3.4	4.0	2.1	1.33	1.74	1.87E-10	114.2
LCCI-44									
PE-53718NL	21.9	2.7	72.4	90.5	39.5	6.9	0.297	3.35E-10	85.71

SMT Power Inductors

Toroid - SLIC Series

Electrical Specifications @ 25°C - Operating Temperature -40°C to +130°C[6]									
Pulse[4,5] Part Number	Inductance @ Irated (µH)	Irated (A)	DCR (mΩ)		Inductance @ $0A_{DC}$ (µH)	Reference ET (Volt -µsec)	Flux Density Factor (K1)	Core Loss Factor (K2)	Temp. Rise Factor (K3)
			TYP	MAX					
HCI-44									
PE-53691*NL	1.68	13.90	3.06	3.6	2.8	1.83	1.12	3.35E-10	85.7
PE-53681NL	2.5	11.40	4.59	5.4	4.2	2.23	0.92	3.35E-10	85.7
LCI-50									
PE-53663NL	9.3	7.20	15.895	18.7	16	4.92	0.41	4.52E-10	67.9
PE-53653NL	16.1	5.10	27.2	32.0	25.9	6.27	0.32	4.52E-10	67.9
PE-53634NL	50	2.60	113.05	133	72.9	10.5	0.19	4.52E-10	67.9
PE-53614NL	1070	0.71	1445	1700	1950	54.4	0.04	4.52E-10	67.9
LCCI-50									
PE-53719NL**	4.025	6.4	18.4	23	6.575	3.135	0.638	4.52E-10	67.89
HCI-50									
PE-53692*NL	3.5	12.40	5.61	6.6	6.5	3.1	0.64	4.52E-10	67.9
PE-53682NL	4.7	10.40	7.055	8.3	8.4	3.58	0.56	4.52E-10	67.9
HCCI-44									
PE-53361NL	0.53	23.8	1.0	3	0.88	1	2.020	3.35E-10	85.71
HCCI-50									
PE-53362NL	1.1	21	1.7	2.5	2.1	1.75	1.116	4.52E-10	67.89
HCI-68									
PE-53700*NL	5.2	15.40	5.27	6.2	10.5	5.21	0.35	9.58E-10	44.6
PE-53683NL	9.4	10.90	10.455	12.3	17.6	6.84	0.27	9.58E-10	44.6
HCCI-68									
PE-53363NL	2.1	22.4	2.5	3.4	4	3.25	0.559	9.58E-10	4.56

Notes:

1. Reference values are for an inductor with a 55°C temperature rise. The core loss is 10% of the copper loss at the ET listed and 500kHz.
2. Core does not saturate abruptly. The ET and DC current are limited by the desired inductance and temperature rise.
3. In high volt-time applications, additional heating in the component can occur due to core losses in the inductor which may necessitate derating the current in order to limit the temperature rise of the component. In order to determine the approximate total losses (or temperature rise) for a given application, both copper and core losses should be taken into account.

   Estimated Temperature Rise:

   $Trise = K3 * (Coreloss\ (W) + Copperloss\ (W))^{.833}\ (C)$

   $CopperLoss = Irms^2 * DCR_Typical\ (m\Omega) / 1000$

   $CopperLoss = K2 * (Freq_kHz)^{1.26} * (\Delta B)^{2.11}$

   $\Delta B = K1 * Volt\text{-}\mu sec * 100$
4. Optional Tape & Reel packaging can be ordered by adding a "**T**" suffix to the part number (i.e. P0595NL becomes P0595NL**T**). Pulse complies to industry standard tape and reel specification EIA481.
5. The "**NL**" suffix indicates an RoHS-compliant part number. Non-NL suffixed parts are not necessarily RoHS compliant, but are electrically and mechanically equivalent to NL versions. If a part number does not have the "**NL**" suffix, but an RoHS compliant version is required, please contact Pulse for availability.
6. The temperature of the component (ambient plus temperature rise) must be within the stated operating temperature range.

** Contact Pulse for availability

Mechanical

High Current Inductors (HCI)

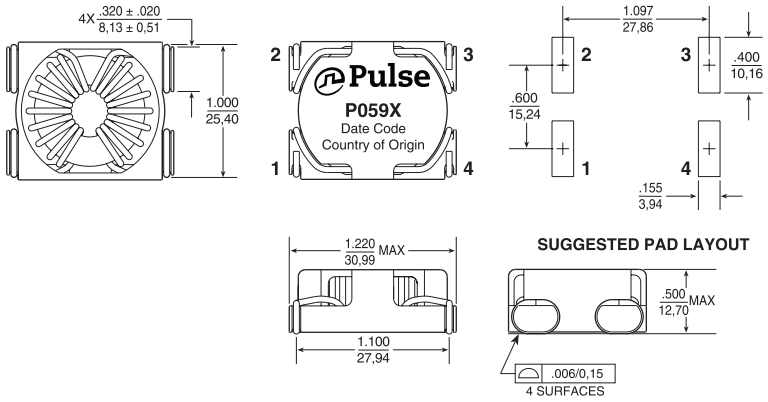

PKG	A	B	C	D	E	F
HCI-37	.620 15,75	.605 15,37	.370 9,40	.500 12,70	.440 11,18	.500 12,70
HCI-44	.670 17,02	.670 17,02	.390* 9,91	.560 14,22	.490 12,45	.570 14,48
HCI-50	.740 18,80	.740 18,80	.390* 9,91	.630 16,00	.560 14,22	.640 16,26
HCI-68	.940 23,88	.940 23,88	.390* 9,91	.820 20,83	.700 17,78	.830 21,08

* Dimension "C" is .400/10,16 for the marked models because of heavier wire gage.

Mechanical

Low Current Inductors (LCCI)

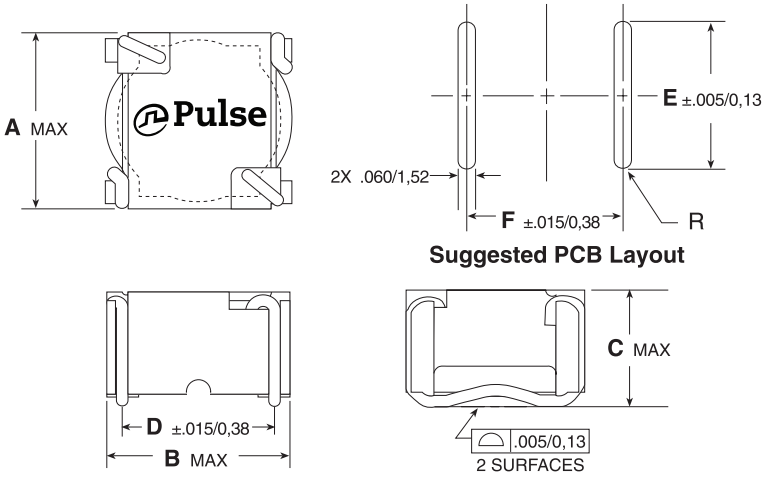

PKG	A	B	C	D	E	F
LCI-20	.340 8,64	.340 8,64	.270 6,86	.260 6,60	.300 7,62	.270 6,86
LCI-30	.435 11,05	.440 11,18	.360 9,14	.350 8,89	.400 10,16	.360 9,14
LCI-37	.565 14,35	.570 14,48	.360 9,14	.450 11,43	.520 13,21	.460 11,68
LCI-44	.600 15,24	.620 15,75	.390 9,91	.500 12,70	.550 13,97	.500 12,70
LCI-50	.670 17,02	.700 17,78	.390 9,91	.580 14,73	.620 15,75	.590 14,99

Mechanicals *(continued)*

High Current Coupled Inductors (HCCI)

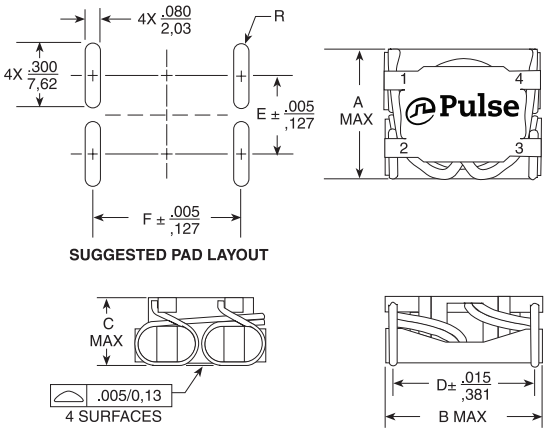

Schematic

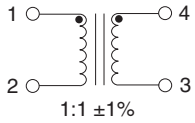

Low Current Coupled Inductors (LCCI)

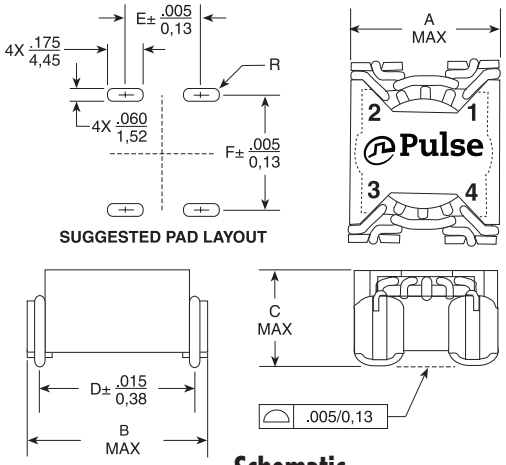

Schematic

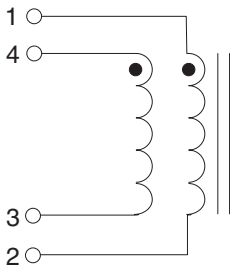

Size Codes						
	HCCI-44	**HCCI-50**	**HCCI-68**	**LCCI-37**	**LCCI-44**	**LCCI-50**
A	.715/18,16	.800/20,32	1.000/25,40	.560/14,22	.590/14,99	.670/17,02
B	.865/21,97	.910/23,11	1.110/28,19	.645/16,38	.715/18,16	.770/19,56
C	.390/9,91	.390/9,91	.390/9,91	.350/8,89	.390/9,91	.390/9,91
D	.760/10,30	.800/20,32	1.000/25,40	.520/13,21	.600/15,24	.650/16,51
E	.360/9,14	.440/11,18	.620/15,75	.340/8,64	.370/9,40	.445/11,30
F	.770/19,56	.810/20,57	1.010/13,46	.530/13,46	.610/15,49	.660/16,76

For More Information

Pulse Worldwide Headquarters
15255 Innovation Drive Ste 100
San Diego, CA 92128
U.S.A.

Tel: 858 674 8100
Fax: 858 674 8262

Pulse Europe
Pulse Electronics GmbH
Am Rottland 12
58540 Meinerzhagen
Germany

Tel: 49 2354 777 100
Fax: 49 2354 777 168

Pulse China Headquarters
Pulse Electronics (ShenZhen) CO., LTD
D708, Shenzhen Academy of
Aerospace Technology,
The 10th Keji South Road,
Nanshan District, Shenzhen,
P.R. China 518057

Tel: 86 755 33966678
Fax: 86 755 33966700

Pulse North China
Room 2704/2705
Super Ocean Finance Ctr.
2067 Yan An Road West
Shanghai 200336
China

Tel: 86 21 62787060
Fax: 86 2162786973

Pulse South Asia
3 Fraser Street 0428
DUO Tower
Singapore 189352

Tel: 65 6287 8998
Fax: 65 6280 0080

Pulse North Asia
1F., No.111 Xiyuan Road
Zhongli District
Taoyuan City 32057
Taiwan (R.O.C)

Tel: 886 3 4356768
Fax: 886 3 4356820

Performance warranty of products offered on this data sheet is limited to the parameters specified. Data is subject to change without notice. Other brand and product names mentioned herein may be trademarks or registered trademarks of their respective owners. © Copyright, 2019. Pulse Electronics, Inc. All rights reserved.