4-BIT, ECL-INTERFACED PROGRAMMABLE DELAY LINE (SERIES PDU1016H)

data delay devices, inc.

FEATURES

- Digitally programmable in 16 delay steps
- Monotonic delay-versus-address variation
- Precise and stable delays
- Input & outputs fully 10KH-ECL interfaced & buffered
- Fits 32-pin DIP socket

PACKAGES

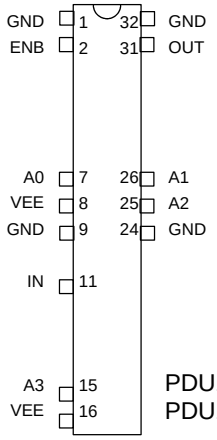

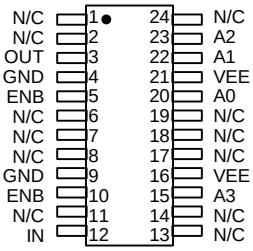

PDU1016H-xxC4 SMD
PDU1016H-xxMC4 Mil SMD

PDU1016H-xx DIP
PDU1016H-xxM Mil DIP

FUNCTIONAL DESCRIPTION

The PDU1016H-series device is a 4-bit digitally programmable delay line. The delay, TD_A, from the input pin (IN) to the output pin (OUT) depends on the address code (A3-A0) according to the following formula:

$$TD_A = TD_0 + T_{INC} * A$$

where A is the address code, T_{INC} is the incremental delay of the device, and TD_0 is the inherent delay of the device. The incremental delay is specified by the dash number of the device and can range from 0.5ns through 100ns, inclusively. The enable pin (ENB) is held LOW during normal operation. When this signal is brought HIGH, OUT is forced into a LOW state. The address is not latched and must remain asserted during normal operation.

PIN DESCRIPTIONS

IN	Signal Input
OUT	Signal Output
A0-A3	Address Bits
ENB	Output Enable
VEE	-5 Volts
GND	Ground

SERIES SPECIFICATIONS

- **Total programmed delay tolerance:** 5% or 1ns, whichever is greater
- **Inherent delay (TD_0):** 5.5ns typical for dash numbers up to 5, greater for larger #'s
- **Setup time and propagation delay:**
  - **Address to input setup (T_{AIS}):** 3.6ns
  - **Disable to output delay (T_{DISO}):** 1.7ns typical
- **Operating temperature:** 0° to 70° C
- **Temperature coefficient:** 100PPM/°C (excludes TD_0)
- **Supply voltage V_{EE}:** -5VDC ± 5%
- **Power Dissipation:** 615mw typical (no load)
- **Minimum pulse width:** 20% of total delay

NOTE: Any dash number between .5 and 100 not shown is also available.

DASH NUMBER SPECIFICATIONS

Part Number	Incremental Delay Per Step (ns)	Total Delay (ns)
PDU1016H-.5	0.5 ± 0.3	7.5 ± 1.0
PDU1016H-1	1.0 ± 0.5	15 ± 1.0
PDU1016H-2	2.0 ± 0.5	30 ± 1.5
PDU1016H-3	3.0 ± 1.0	45 ± 2.2
PDU1016H-4	4.0 ± 1.0	60 ± 3.0
PDU1016H-5	5.0 ± 1.0	75 ± 3.7
PDU1016H-6	6.0 ± 1.0	90 ± 4.5
PDU1016H-8	8.0 ± 1.0	120 ± 6.0
PDU1016H-10	10.0 ± 1.5	150 ± 7.5
PDU1016H-15	15.0 ± 1.5	225 ± 11.2
PDU1016H-20	20.0 ± 2.0	300 ± 15.0
PDU1016H-25	25.0 ± 2.5	375 ± 18.8
PDU1016H-30	30.0 ± 3.0	450 ± 22.5
PDU1016H-40	40.0 ± 4.0	600 ± 30.0
PDU1016H-50	50.0 ± 5.0	750 ± 37.5
PDU1016H-60	60.0 ± 6.0	900 ± 45.0
PDU1016H-80	80.0 ± 8.0	1200 ± 60.0
PDU1016H-100	100.0 ± 10.0	1500 ± 75.0

©2001 Data Delay Devices

APPLICATION NOTES

ADDRESS UPDATE

The PDU1016H is a memory device. As such, special precautions must be taken when changing the delay address in order to prevent spurious output signals. The timing restrictions are shown in Figure 1.

After the last signal edge to be delayed has appeared on the OUT pin, a minimum time, T_{OAX}, is required before the address lines can change. This time is given by the following relation:

$$T_{OAX} = \max \{ (A_i - A_{i-1}) * T_{INC} , 0 \}$$

where A_{i-1} and A_i are the old and new address codes, respectively. Violation of this constraint may, depending on the history of the input signal, cause spurious signals to appear on the OUT pin. The possibility of spurious signals persists until the required T_{OAX} has elapsed.

A similar situation occurs when using the ENB signal to disable the output while IN is active. In this case, the unit must be held in the disabled state until the device is able to "clear" itself. This is achieved by holding the ENB signal high and the IN signal low for a time given by:

$$T_{DISH} = A_i * T_{INC}$$

Violation of this constraint may, depending on the history of the input signal, cause spurious signals to appear on the OUT pin. The possibility of spurious signals persists until the required T_{DISH} has elapsed.

INPUT RESTRICTIONS

There are three types of restrictions on input pulse width and period listed in the **AC Characteristics** table. The **recommended** conditions are those for which the delay tolerance specifications and monotonicity are guaranteed. The **suggested** conditions are those for which signals will propagate through the unit without significant distortion. The **absolute** conditions are those for which the unit will produce some type of output for a given input.

When operating the unit between the recommended and absolute conditions, the delays may deviate from their values at low frequency. However, these deviations will remain constant from pulse to pulse if the input pulse width and period remain fixed. In other words, the delay of the unit exhibits frequency and pulse width dependence when operated beyond the recommended conditions. Please consult the technical staff at Data Delay Devices if your application has specific high-frequency requirements.

Please note that the increment tolerances listed represent a design goal. Although most delay increments will fall within tolerance, they are not guaranteed throughout the address range of the unit. Monotonicity is, however, guaranteed over all addresses.

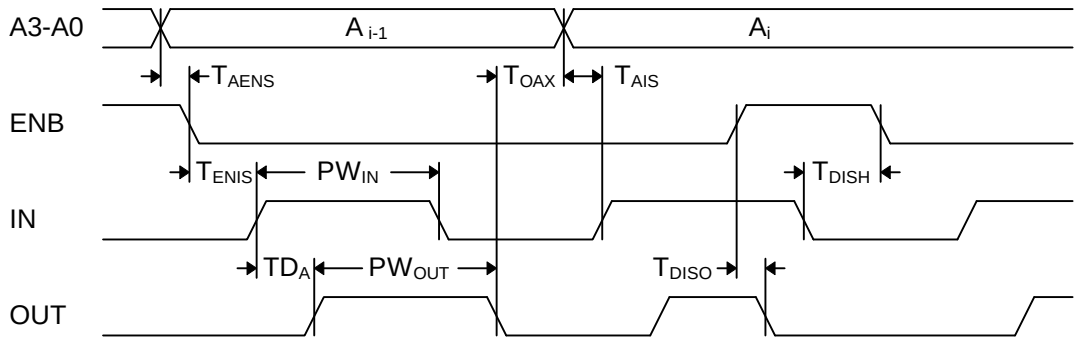

Figure 1: Timing Diagram

DEVICE SPECIFICATIONS

TABLE 1: AC CHARACTERISTICS

PARAMETER		SYMBOL	MIN	TYP	UNITS
Total Programmable Delay		TD_T		15	T_{INC}
Inherent Delay		TD_0		5.5	ns*
Disable to Output Low Delay		T_{DISO}		1.7	ns
Address to Enable Setup Time		T_{AENS}	1.0		ns
Address to Input Setup Time		T_{AIS}	3.6		ns
Enable to Input Setup Time		T_{ENIS}	3.6		ns
Output to Address Change		T_{OAX}	See Text		
Disable Hold Time		T_{DISH}	See Text		
Input Period	Absolute	PER_{IN}	16		% of TD_T
	Suggested	PER_{IN}	40		% of TD_T
	Recommended	PER_{IN}	200		% of TD_T
Input Pulse Width	Absolute	PW_{IN}	8		% of TD_T
	Suggested	PW_{IN}	20		% of TD_T
	Recommended	PW_{IN}	100		% of TD_T

* Greater for dash numbers larger than 5

TABLE 2: ABSOLUTE MAXIMUM RATINGS

PARAMETER	SYMBOL	MIN	MAX	UNITS	NOTES
DC Supply Voltage	V_{EE}	-7.0	0.3	V	
Input Pin Voltage	V_{IN}	V_{EE} - 0.3	0.3	V	
Storage Temperature	T_{STRG}	-55	150	C	
Lead Temperature	T_{LEAD}		300	C	10 sec

TABLE 3: DC ELECTRICAL CHARACTERISTICS

(0C to 75C)

PARAMETER	SYMBOL	MIN	TYP	MAX	UNITS	NOTES
High Level Output Voltage	V_{OH}	-1.020		-0.735	V	V_{IH} = MAX,50Ω to -2V
Low Level Output Voltage	V_{OL}	-1.950		-1.600	V	V_{IL} = MIN, 50Ω to -2V
High Level Input Voltage	V_{IH}			-1.070	V	
Low Level Input Voltage	V_{IL}	-1.480			V	
High Level Input Current	I_{IH}			475	µA	V_{IH} = MAX
Low Level Input Current	I_{IL}	0.5			µA	V_{IL} = MIN

PACKAGE DIMENSIONS

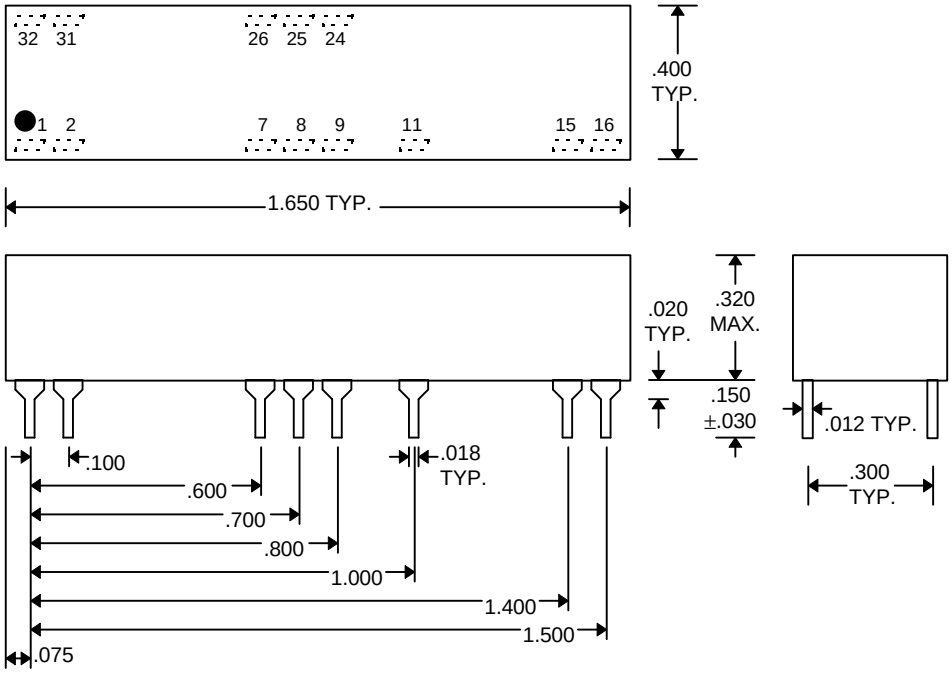

PDU1016H-xx (Commercial DIP)
PDU1016H-xxM (Military DIP)

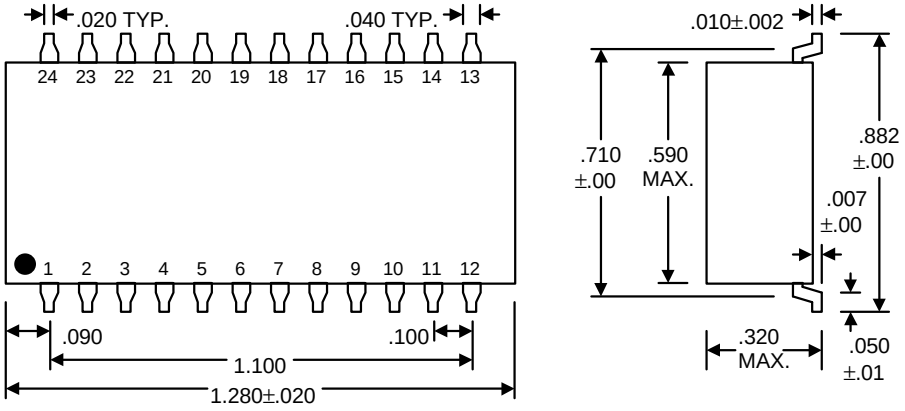

PDU1016H-xxC4 (Commercial SMD)
PDU1016H-xxMC4 (Military SMD)

DELAY LINE AUTOMATED TESTING

TEST CONDITIONS

INPUT:		**OUTPUT:**	
Ambient Temperature:	$25^oC \pm 3^oC$	**Load:**	50Ω to -2V
Supply Voltage (Vcc):	-5.0V ± 0.1V	**C_{load}:**	5pf ± 10%
Input Pulse:	Standard 10KH ECL levels	**Threshold:**	$(V_{OH} + V_{OL}) / 2$ (Rising & Falling)
Source Impedance:	50Ω Max.		
Rise/Fall Time:	2.0 ns Max. (measured between 20% and 80%)		
Pulse Width:	PW_{IN} = 1.5 x Total Delay		
Period:	PER_{IN} = 10 x Total Delay		

NOTE: The above conditions are for test only and do not in any way restrict the operation of the device.

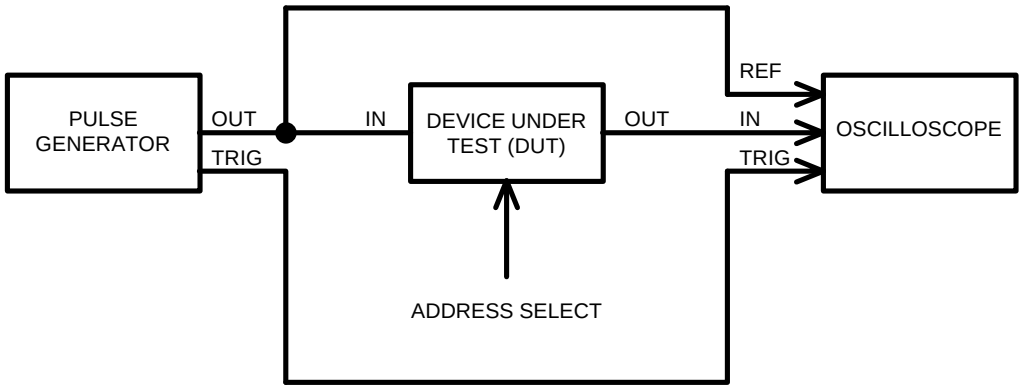

Test Setup

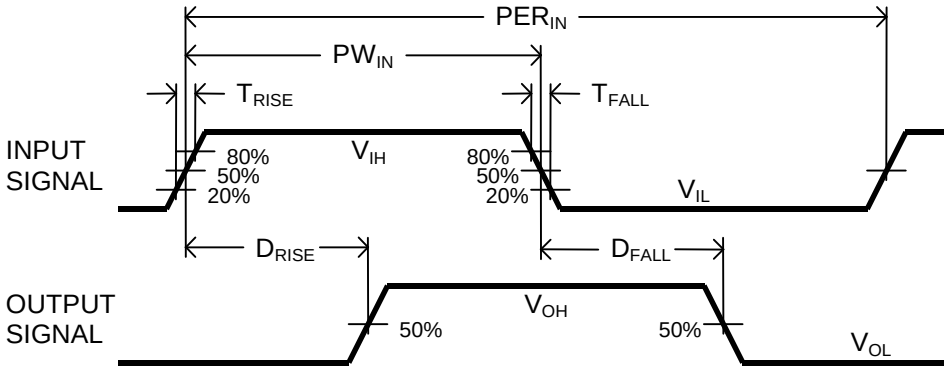

Timing Diagram For Testing