Plug-in Signal Conditioners M-UNIT

PULSE SCALER

(pulse dividing; selectable range)

Functions & Features

- Galvanically isolating pulse rate signals and converting them into convenient engineering unit
- Excitation
- Scaling factor adjustable with the front switches
- Uniform output pulse
- Various outputs (relay, open collector and voltage pulses)
- Isolation up to 2000 V AC
- High-density mounting

Typical Applications

- Positive displacement flowmeters and turbine meters
- Dry contact signal produced at rotating machine

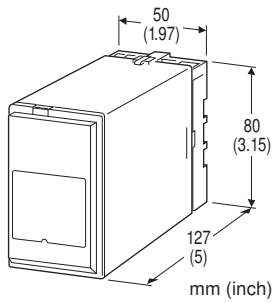

MODEL: PDU–[1][2][3][4]–[5][6]

ORDERING INFORMATION

- Code number: PDU-[1][2][3][4]-[5][6]

Specify a code from below for each of [1] through [6].
(e.g. PDU-CM1N-B/Q)

- Use Ordering Information Sheet (No. ESU-1368). Default setting (table below) will be used if not otherwise specified.
- Specify the specification for option code /Q
(e.g. /C01/S01)

Factory default setting

ITEM	DEFAULT
Scaling factor	1 / (1×10^0)
Output pulse width	Approx. 50% duty ratio at the max. input frequency (400 msec. max.); Limited to the range indicated in Output Pulse Width code 3 for relay output
Filter	Without; For dry contact input with frequency ≤10 Hz, the filter is automatically provided.

[1] INPUT

A: Dry contact
B: Voltage pulse (Specify sensitivity)
C: 5 V pulse (sensitivity 2 V)
D: 12 V/24 V pulse (sensitivity 5 V)
H: Two-wire current pulse

[2] OUTPUT

A: Open collector (max. 100 kHz)
M: 5 V pulse (max. 100 kHz)
N: 12 V pulse (max. 100 kHz)
P: 24 V pulse (max. 100 kHz)
H: Relay contact (max. 5 Hz)
( ) = Max. frequency

[3] OUTPUT PULSE WIDTH

1: One-shot output (5 – 200 µsec.)
(Not selectable with relay contact.)
2: One-shot output (0.18 – 9 msec.)
(Not selectable with relay contact.)
3: One-shot output (9 – 400 msec.)

[4] OUTPUT LOGIC

N: The same as the input
R: Inverted

[5] POWER INPUT

AC Power
B: 100 V AC
C: 110 V AC
D: 115 V AC
F: 120 V AC
G: 200 V AC
H: 220 V AC
J: 240 V AC

DC Power
S: 12 V DC
R: 24 V DC
V: 48 V DC

[6] OPTIONS

blank: none
/Q: With options (specify the specification)

SPECIFICATIONS OF OPTION: Q (multiple selections)

COATING (For the detail, refer to M-System's web site.)

/C01: Silicone coating

/C02: Polyurethane coating

/C03: Rubber coating

TERMINAL SCREW MATERIAL

/S01: Stainless steel

GENERAL SPECIFICATIONS

Construction: Plug-in

Connection: M3.5 screw terminals

Screw terminal: Chromated steel (standard) or stainless steel

Housing material: Flame-resistant resin (black)

Isolation: Input to output to power

Input pulse sensing: DC coupled

Sensitivity adjustment: Single-turn screwdriver adjustment (front); 0 – ±7 V

Hysteresis (deadband): Approx. 0.5 V

Input filter: Provided for 10 Hz or lower output frequency (time constant approx. 1 msec.)

Scaling factor adjustment: 10-position rotary switches (front);

$1 / (m \times 10^{\wedge n})$ m = 1 - 9999, n = 0 - 6

Output pulse width adjustment: Multi-turn screwdriver adjustment (front); 5 µsec. – 400 msec.

INPUT SPECIFICATIONS

Frequency range: 0 – 100 kHz (10 Hz max. with filter)

Excitation: 12 V DC @ 30 mA; shortcircuit protection

Pulse width time requirement: 5 µsec. min. (10 ms with filter)

■ **Dry Contact**

Sensing: 7.5V DC @ 1mA

ON/OFF level: ≥ 30 kΩ/5 V for OFF; ≤ 1 kΩ/1 V for ON

■ **Voltage Pulse**: Specify DC offset and amplitude.

Waveform: Square or sine

Input impedance: 10 kΩ min.

Input amplitude: 2 – 50 Vp-p

Offset: 0 – ±7 V

Max. voltage between input terminals: ±32 V

• **5V, 12V, 24V Pulse**

Waveform: Square or sine

Input impedance: 10 kΩ min.

Detecting level

(Input: 5 V pulse: 12 V/24 V pulse)

V_H: ≥ 3 V: ≥ 6 V

V_L: ≤ 1 V: ≤ 4 V

■ **Two-wire Current Pulse**

Input resistance: Receiving resistor 220 Ω

Maximum current: ±50 mA

Hi/Lo level: ≤ 5 mA for Lo, ≥ 15 mA for Hi

■ **Voltage pulse waveform**

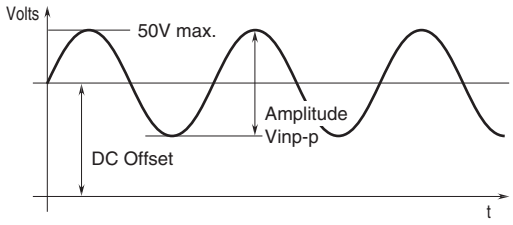

OUTPUT SPECIFICATIONS

■ **Open Collector**: 50 V DC @ 50 mA (resistive load)

Maximum frequency: 100 kHz with load resistance ≤ 1 kΩ

Saturation voltage: 1.0 V DC

■ **Voltage Pulse**:

High level: Rating (5, 12 or 24 V) ±10 %

Low level: ≤ 0.5 V

Maximum frequency: 100 kHz

Load resistance:

1 kΩ min. for 5 V

2.4 kΩ min. for 12 V,

4.8 kΩ min. for 24 V

■ **Relay Contact**:

120 V AC @ 200 mA (cos ø = 1)

30 V DC @ 200 mA (resistive load)

Electrical life 3×10^5 cycles (rate 30/min.)

Maximum switching voltage: 250 V AC or 30 V DC

Maximum switching power: 24 VA or 6 W

Minimum load: 5 V DC @ 10 mA

Mechanical life: 2×10^7 cycles

For maximum relay life with inductive loads, external protection is recommended.

Maximum frequency: 5 Hz

OUTPUT PULSE WIDTH

• **One-shot Output**: Preset pulse width ±20 %;

The pulse width is factory set to approx. 50 % duty ratio at the maximum frequency. For relay output, it is limited within the range indicated in Code 3 specification.

Adjustable pulse width: 5 µsec. – 400 msec.

INSTALLATION

Power input

• **AC**: Operational voltage range: rating ±10 %, 50/60 ±2 Hz, approx. 2 VA

•**DC**: Operational voltage range: rating ±10 %, ripple 10 %p-p max., approx. 2 W (80 mA at 24 V)

Operating temperature: -5 to +60°C (23 to 140°F)

Operating humidity: 30 to 90 %RH (non-condensing)

Mounting: Surface or DIN rail

Weight: 350 g (0.77 lb)

PERFORMANCE

Response time:
≤ 25 µsec. without filter
≤ 2 msec. with filter
≤ 20 msec. with relay contact pulse
Insulation resistance: ≥ 100 MΩ with 500 V DC
Dielectric strength: 2000 V AC @1 minute (input to output to power to ground)

EXTERNAL VIEW

Note: This unit is factory calibrated according to the Ordering Information Sheet.

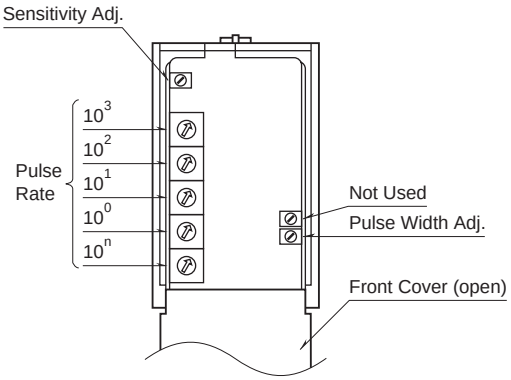

OUTPUT LOGIC

INPUT TYPE	PULSE LOGIC	INPUT	VOLTAGE PULSE OUTPUT	OPEN COLLECTOR or RELAY CONTACT
Voltage Pulse Input 2-wire Current Pulse Input [ON current (H) OFF current (L)]	Non Inverted	H L	H L	OFF ON
	Inverted	H L	H L	OFF ON
Dry Contact Input	Non Inverted	OFF ON	H L	OFF ON
	Inverted	OFF ON	H L	OFF ON

The pulse width in one-shot means the bold lined section of a pulse waveform.

EXTERNAL DIMENSIONS & TERMINAL ASSIGNMENTS unit: mm (inch)

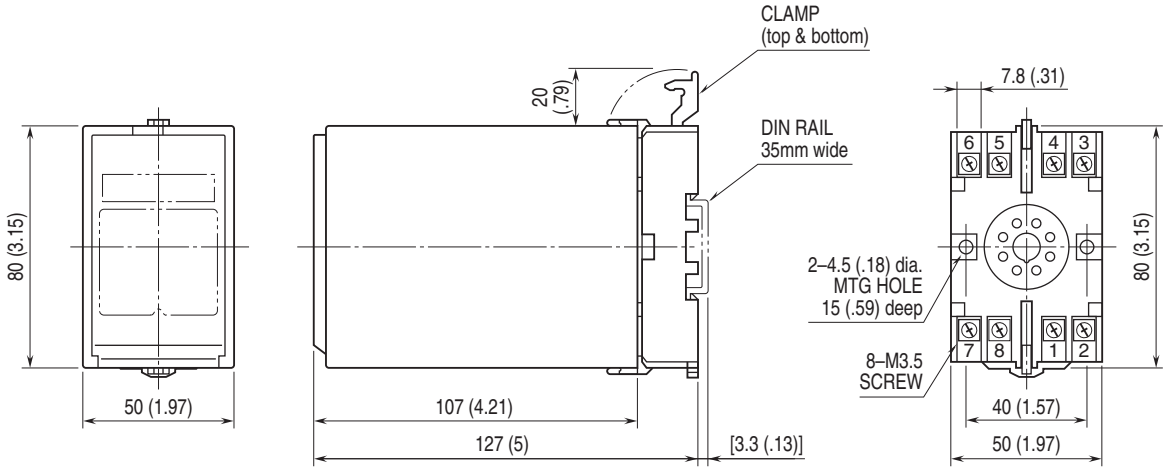

• When mounting, no extra space is needed between units.

SCHEMATIC CIRCUITRY & CONNECTION DIAGRAM

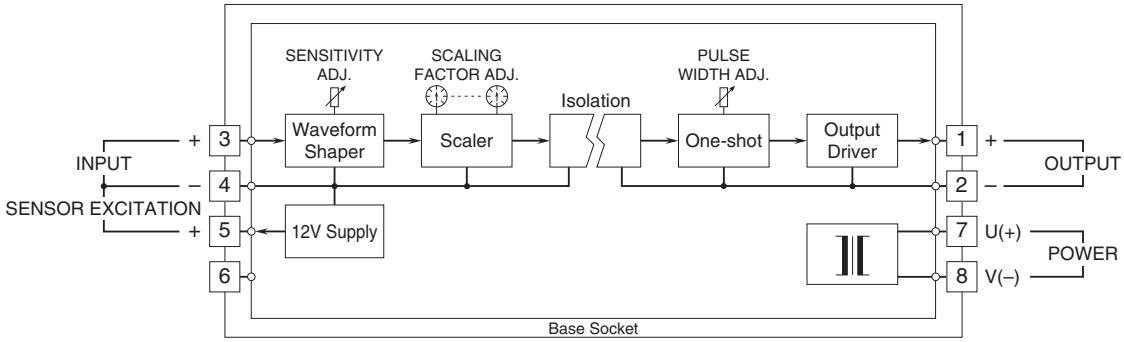

Input Connection Examples

■ Dry Contact

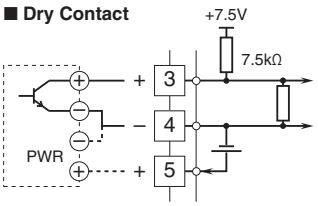

■ 2-Wire Current Pulse
• Built-in Excitation

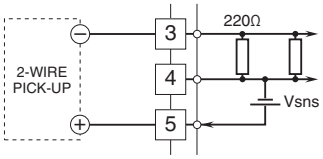

■ Voltage Pulse

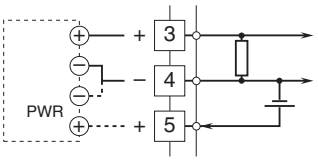

• External DC Supply

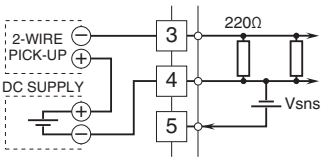

Output Connection Examples

■ Open Collector

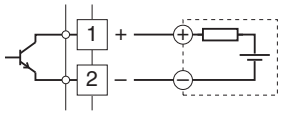

■ Voltage Pulse

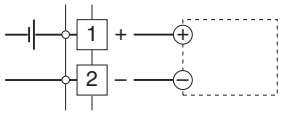

■ Relay Contact
• AC Powered

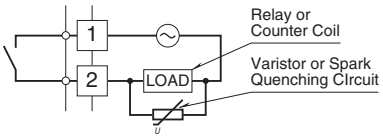

• DC Powered

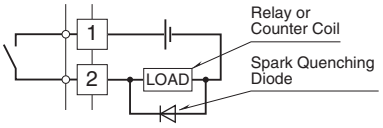

⚠ Specifications are subject to change without notice.