# DATA SHEET

## PDTC124E series

NPN resistor-equipped transistors;
R1 = 22 kΩ, R2 = 22 kΩ

Product data sheet
Supersedes data of 2003 Apr 14

2004 Aug 17

NXP founded by Philips

# NPN resistor-equipped transistors; R1 = 22 kΩ, R2 = 22 kΩ

# PDTC124E series

## FEATURES

- Built-in bias resistors
- Simplified circuit design
- Reduction of component count
- Reduced pick and place costs.

## APPLICATIONS

- General purpose switching and amplification
- Inverter and interface circuits
- Circuit driver.

## QUICK REFERENCE DATA

| SYMBOL | PARAMETER | TYP. | MAX. | UNIT |
|---|---|---|---|---|
| $V_{CEO}$ | collector-emitter voltage | – | 50 | V |
| $I_O$ | output current (DC) | – | 100 | mA |
| R1 | bias resistor | 22 | – | kΩ |
| R2 | bias resistor | 22 | – | kΩ |

## DESCRIPTION

NPN resistor-equipped transistor (see “Simplified outline, symbol and pinning” for package details).

## PRODUCT OVERVIEW

| TYPE NUMBER | PACKAGE | | MARKING CODE | PNP COMPLEMENT |
|---|---|---|---|---|
| | PHILIPS | EIAJ | | |
| PDTC124EE | SOT416 | SC-75 | 06 | PDTA124EE |
| PDTC124EEF | SOT490 | SC-89 | 36 | PDTA124EEF |
| PDTC124EK | SOT346 | SC-59 | 06 | PDTA124EK |
| PDTC124EM | SOT883 | SC-101 | DX | PDTA124EM |
| PDTC124ES | SOT54 (TO-92) | SC-43 | TC124E | PDTA124ES |
| PDTC124ET | SOT23 | – | *17[1] | PDTA124ET |
| PDTC124EU | SOT323 | SC-70 | *06[1] | PDTA124EU |

**Note**

1. * = p: Made in Hong Kong.
   * = t: Made in Malaysia.
   * = W: Made in China.

# NPN resistor-equipped transistors; R1 = 22 kΩ, R2 = 22 kΩ

# PDTC124E series

**SIMPLIFIED OUTLINE, SYMBOL AND PINNING**

| TYPE NUMBER | SIMPLIFIED OUTLINE AND SYMBOL | PINNING | |
|---|---|---|---|
| | | PIN | DESCRIPTION |
| PDTC124ES | 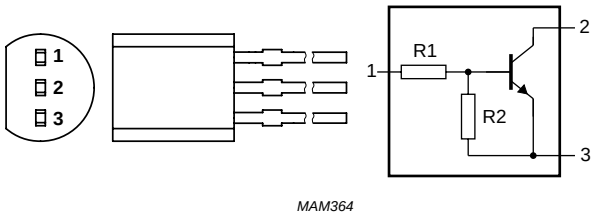 MAM364 | 1<br>2<br>3 | base<br>collector<br>emitter |
| PDTC124EE<br>PDTC124EEF<br>PDTC124EK<br>PDTC124ET<br>PDTC124EU | 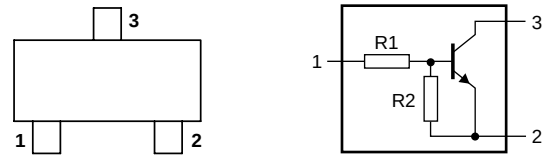 Top view MDB269 | 1<br>2<br>3 | base<br>emitter<br>collector |
| PDTC124EM | 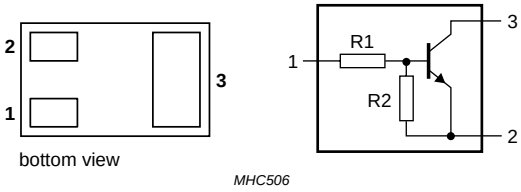 bottom view MHC506 | 1<br>2<br>3 | base<br>emitter<br>collector |

## LIMITING VALUES

In accordance with the Absolute Maximum Rating System (IEC 60134).

| SYMBOL | PARAMETER | CONDITIONS | MIN. | MAX. | UNIT |
|---|---|---|---|---|---|
| $V_{CBO}$ | collector-base voltage | open emitter | – | 50 | V |
| $V_{CEO}$ | collector-emitter voltage | open base | – | 50 | V |
| $V_{EBO}$ | emitter-base voltage | open collector | – | 10 | V |
| $V_I$ | input voltage | | | | |
| | positive | | – | +40 | V |
| | negative | | – | −10 | V |
| $I_O$ | output current (DC) | | – | 100 | mA |
| $I_{CM}$ | peak collector current | | – | 100 | mA |
| $P_{tot}$ | total power dissipation | $T_{amb} \leq 25$ °C | | | |
| | SOT54 | note 1 | – | 500 | mW |
| | SOT23 | note 1 | – | 250 | mW |
| | SOT346 | note 1 | – | 250 | mW |
| | SOT323 | note 1 | – | 200 | mW |
| | SOT416 | note 1 | – | 150 | mW |
| | SOT490 | notes 1 and 2 | – | 250 | mW |
| | SOT883 | notes 2 and 3 | – | 250 | mW |
| $T_{stg}$ | storage temperature | | −65 | +150 | °C |
| $T_j$ | junction temperature | | – | 150 | °C |
| $T_{amb}$ | operating ambient temperature | | −65 | +150 | °C |

**Notes**

1. Refer to standard mounting conditions.
2. Reflow soldering is the only recommended soldering method.
3. Refer to SOT883 standard mounting conditions; FR4 with 60 μm copper strip line.

## THERMAL CHARACTERISTICS

| SYMBOL | PARAMETER | CONDITIONS | VALUE | UNIT |
|---|---|---|---|---|
| $R_{th\ j\text{-}a}$ | thermal resistance from junction to ambient | in free air | | |
| | SOT54 | note 1 | 250 | K/W |
| | SOT23 | note 1 | 500 | K/W |
| | SOT346 | note 1 | 500 | K/W |
| | SOT323 | note 1 | 625 | K/W |
| | SOT416 | note 1 | 833 | K/W |
| | SOT490 | notes 1 and 2 | 500 | K/W |
| | SOT883 | notes 2 and 3 | 500 | K/W |

**Notes**

1. Refer to standard mounting conditions.
2. Reflow soldering is the only recommended soldering method.
3. Refer to SOT883 standard mounting conditions; FR4 with 60 μm copper strip line.

**CHARACTERISTICS**

$T_{amb}$ = 25 °C unless otherwise specified.

| SYMBOL | PARAMETER | CONDITIONS | MIN. | TYP. | MAX. | UNIT |
|---|---|---|---|---|---|---|
| $I_{CBO}$ | collector-base cut-off current | $V_{CB}$ = 50 V; $I_E$ = 0 | – | – | 100 | nA |
| $I_{CEO}$ | collector-emitter cut-off current | $V_{CE}$ = 30 V; $I_B$ = 0 | – | – | 1 | μA |
| | | $V_{CE}$ = 30 V; $I_B$ = 0; $T_j$ = 150 °C | – | – | 50 | μA |
| $I_{EBO}$ | emitter-base cut-off current | $V_{EB}$ = 5 V; $I_C$ = 0 | – | – | 180 | μA |
| $h_{FE}$ | DC current gain | $V_{CE}$ = 5 V; $I_C$ = 5 mA | 60 | – | – | |
| $V_{CEsat}$ | collector-emitter saturation voltage | $I_C$ = 10 mA; $I_B$ = 0.5 mA | – | – | 150 | mV |
| $V_{i(off)}$ | input-off voltage | $I_C$ = 100 μA; $V_{CE}$ = 5 V | – | 1.1 | 0.8 | V |
| $V_{i(on)}$ | input-on voltage | $I_C$ = 5 mA; $V_{CE}$ = 0.3 V | 2.5 | 1.7 | – | V |
| R1 | input resistor | | 15.4 | 22 | 28.6 | kΩ |
| $\frac{R2}{R1}$ | resistor ratio | | 0.8 | 1 | 1.2 | |
| $C_c$ | collector capacitance | $I_E = i_e$ = 0; $V_{CB}$ = 10 V; f = 1 MHz | – | – | 2.5 | pF |

## PACKAGE OUTLINES

**Plastic surface-mounted package; 3 leads** **SOT416**

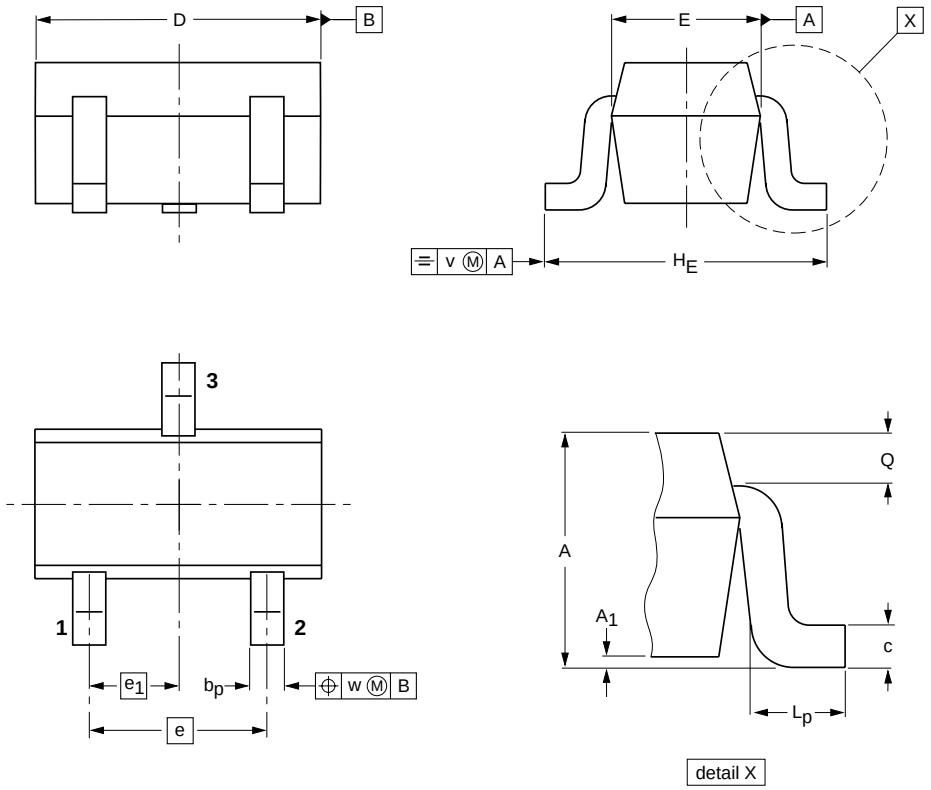


**DIMENSIONS (mm are the original dimensions)**

| UNIT | A | $A_1$ max | $b_p$ | c | D | E | e | $e_1$ | $H_E$ | $L_p$ | Q | v | w |
|---|---|---|---|---|---|---|---|---|---|---|---|---|---|
| mm | 0.95<br>0.60 | 0.1 | 0.30<br>0.15 | 0.25<br>0.10 | 1.8<br>1.4 | 0.9<br>0.7 | 1 | 0.5 | 1.75<br>1.45 | 0.45<br>0.15 | 0.23<br>0.13 | 0.2 | 0.2 |

| OUTLINE VERSION | REFERENCES | | | | EUROPEAN PROJECTION | ISSUE DATE |
|---|---|---|---|---|---|---|
| | IEC | JEDEC | JEITA | | | |
| SOT416 | | | SC-75 | | | ~~04-11-04~~<br>06-03-16 |

**Plastic surface-mounted package; 3 leads** **SOT490**

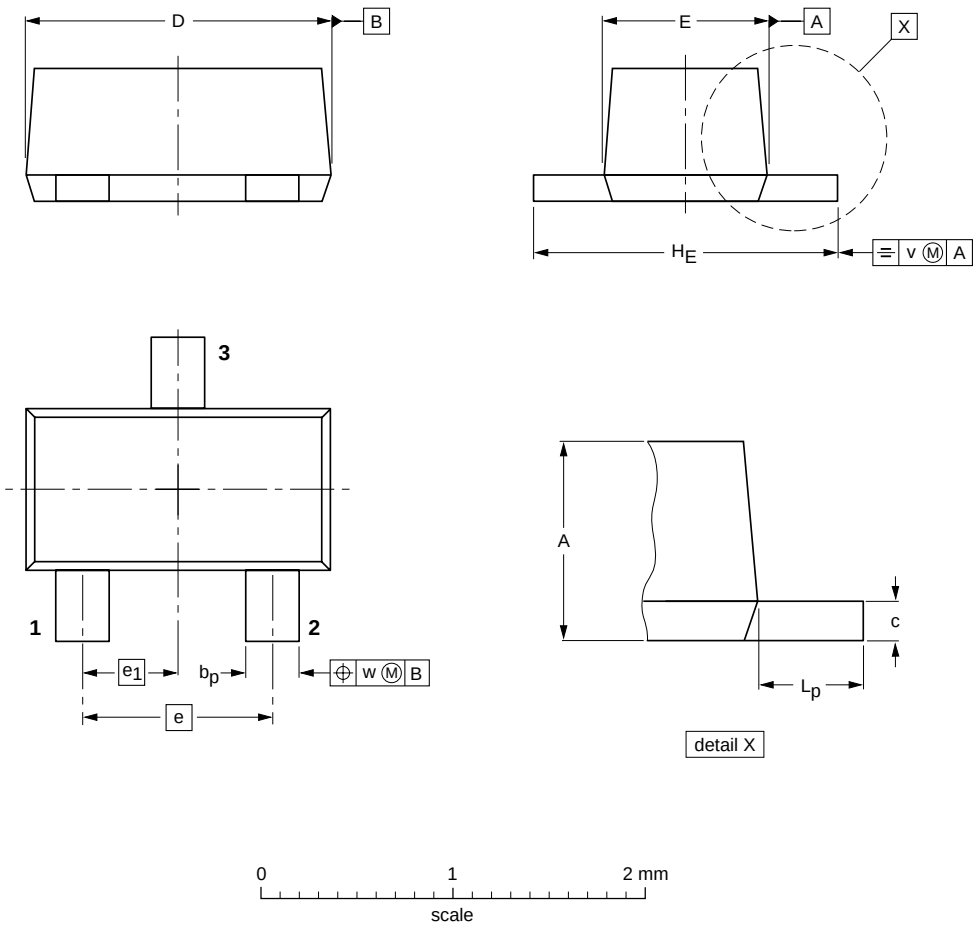


**DIMENSIONS (mm are the original dimensions)**

| UNIT | A | $b_p$ | c | D | E | e | $e_1$ | $H_E$ | $L_p$ | v | w |
|---|---|---|---|---|---|---|---|---|---|---|---|
| mm | 0.8<br>0.6 | 0.33<br>0.23 | 0.2<br>0.1 | 1.7<br>1.5 | 0.95<br>0.75 | 1.0 | 0.5 | 1.7<br>1.5 | 0.5<br>0.3 | 0.1 | 0.1 |

| OUTLINE VERSION | REFERENCES | | | | EUROPEAN PROJECTION | ISSUE DATE |
|---|---|---|---|---|---|---|
| | IEC | JEDEC | JEITA | | | |
| SOT490 | | | SC-89 | | | ~~05-07-28~~<br>06-03-16 |

**Plastic surface-mounted package; 3 leads** **SOT346**

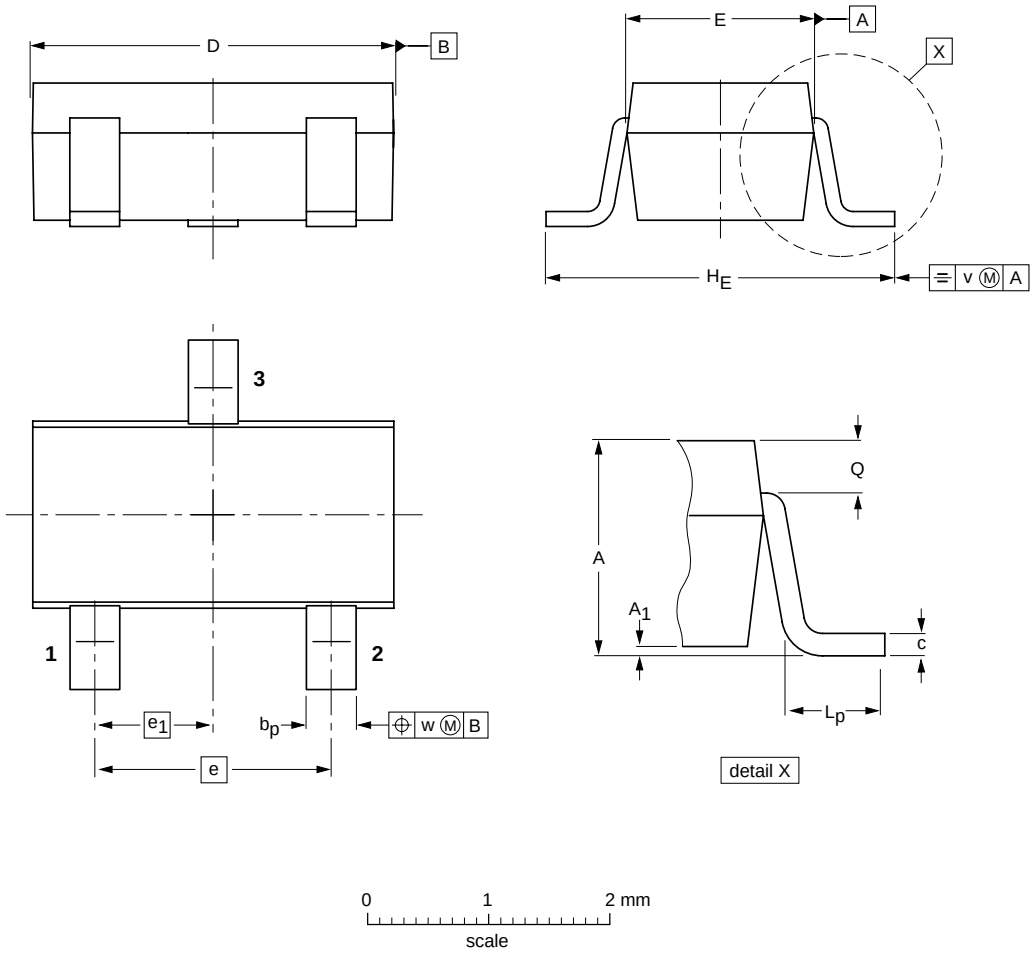


**DIMENSIONS (mm are the original dimensions)**

| UNIT | A | $A_1$ | $b_p$ | c | D | E | e | $e_1$ | $H_E$ | $L_p$ | Q | v | w |
|---|---|---|---|---|---|---|---|---|---|---|---|---|---|
| mm | 1.3<br>1.0 | 0.1<br>0.013 | 0.50<br>0.35 | 0.26<br>0.10 | 3.1<br>2.7 | 1.7<br>1.3 | 1.9 | 0.95 | 3.0<br>2.5 | 0.6<br>0.2 | 0.33<br>0.23 | 0.2 | 0.2 |

| OUTLINE VERSION | REFERENCES | | | | EUROPEAN PROJECTION | ISSUE DATE |
|---|---|---|---|---|---|---|
| | IEC | JEDEC | JEITA | | | |
| SOT346 | | TO-236 | SC-59A | | | ~~04-11-11~~<br>06-03-16 |

**Leadless ultra small plastic package; 3 solder lands; body 1.0 x 0.6 x 0.5 mm** **SOT883**

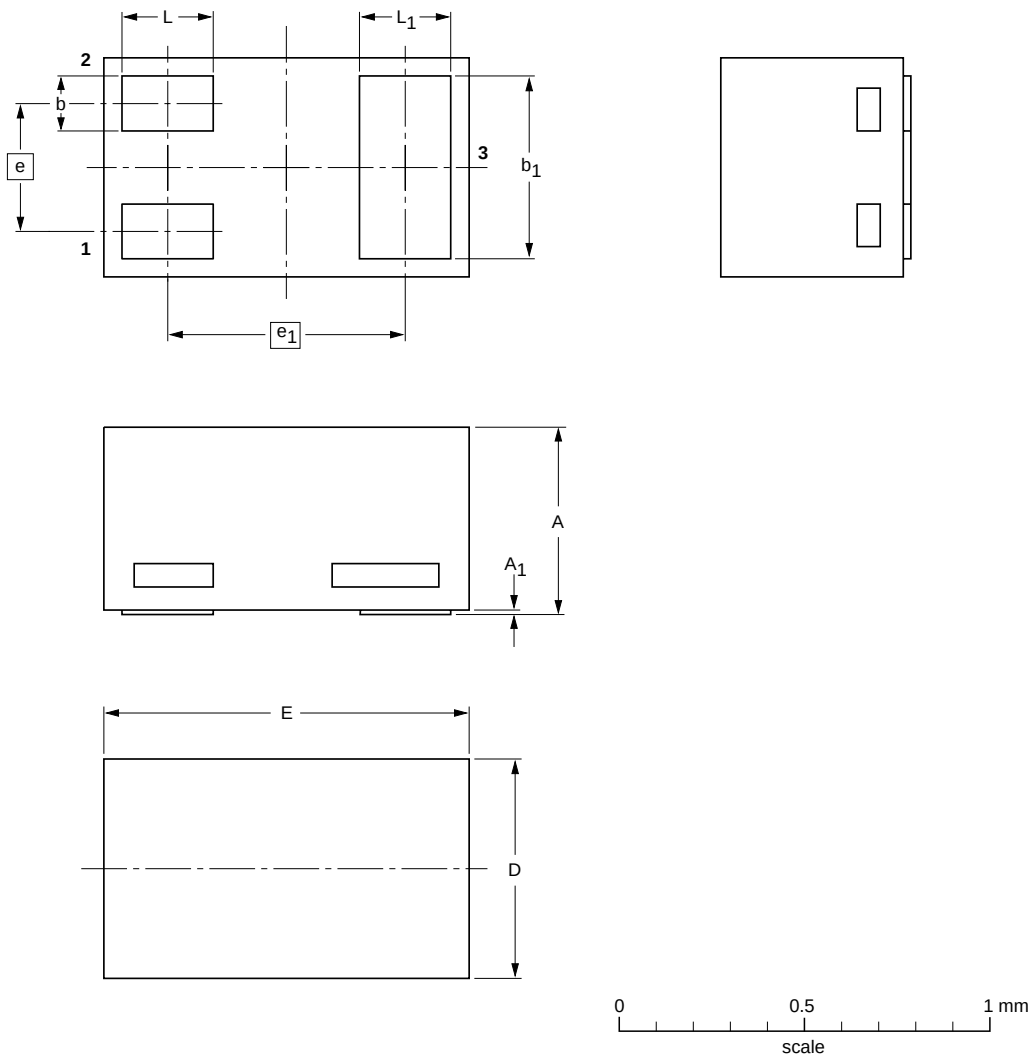


**DIMENSIONS (mm are the original dimensions)**

| UNIT | A(1) | A1 max. | b | b1 | D | E | e | e1 | L | L1 |
|---|---|---|---|---|---|---|---|---|---|---|
| mm | 0.50<br>0.46 | 0.03 | 0.20<br>0.12 | 0.55<br>0.47 | 0.62<br>0.55 | 1.02<br>0.95 | 0.35 | 0.65 | 0.30<br>0.22 | 0.30<br>0.22 |

**Note**

1. Including plating thickness

| OUTLINE VERSION | REFERENCES | | | | EUROPEAN PROJECTION | ISSUE DATE |
|---|---|---|---|---|---|---|
| | IEC | JEDEC | JEITA | | | |
| SOT883 | | | SC-101 | | | ~~03-02-05~~<br>03-04-03 |

**Plastic single-ended leaded (through hole) package; 3 leads** **SOT54**

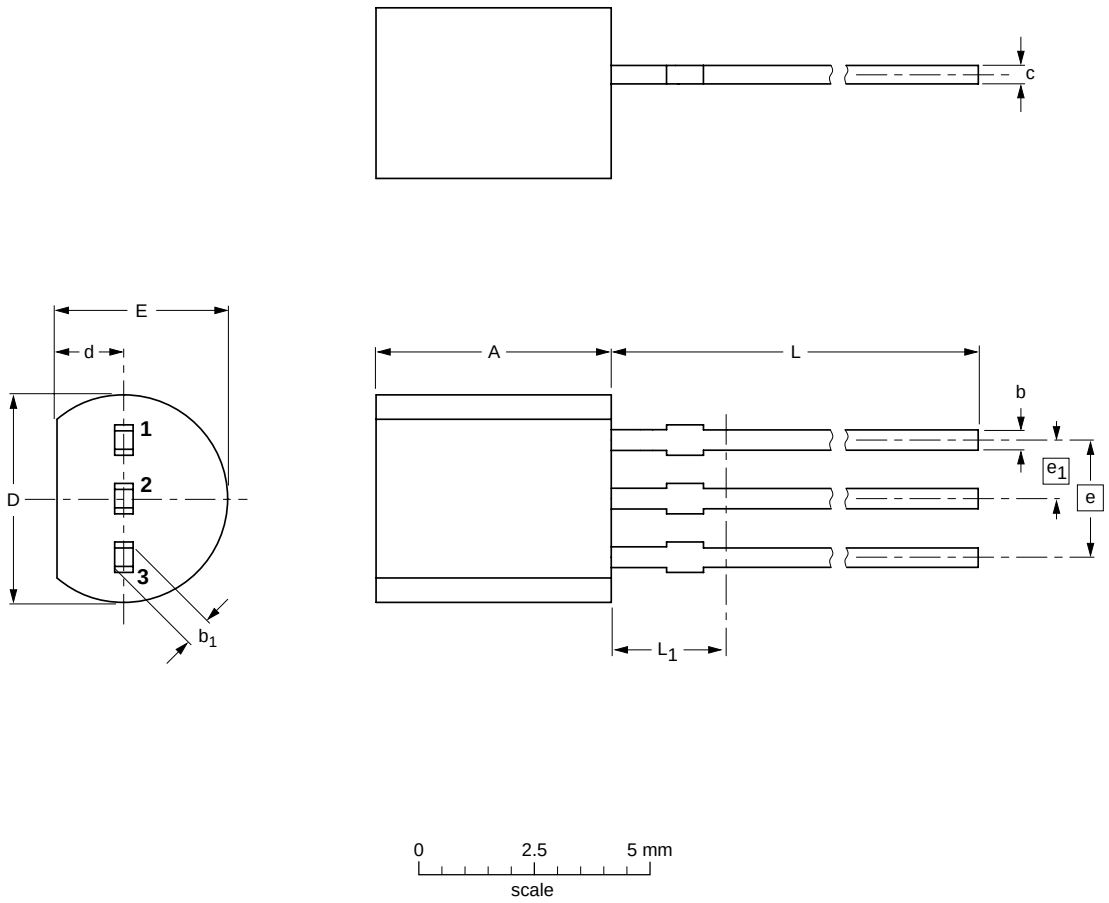


**DIMENSIONS (mm are the original dimensions)**

| UNIT | A | b | $b_1$ | c | D | d | E | e | $e_1$ | L | $L_1$ (1) max. |
|---|---|---|---|---|---|---|---|---|---|---|---|
| mm | 5.2<br>5.0 | 0.48<br>0.40 | 0.66<br>0.55 | 0.45<br>0.38 | 4.8<br>4.4 | 1.7<br>1.4 | 4.2<br>3.6 | 2.54 | 1.27 | 14.5<br>12.7 | 2.5 |

**Note**

1. Terminal dimensions within this zone are uncontrolled to allow for flow of plastic and terminal irregularities.

| OUTLINE VERSION | REFERENCES | | | | EUROPEAN PROJECTION | ISSUE DATE |
|---|---|---|---|---|---|---|
| | IEC | JEDEC | JEITA | | | |
| SOT54 | | TO-92 | SC-43A | | | ~~04-06-28~~<br>04-11-16 |

**Plastic surface-mounted package; 3 leads** **SOT23**

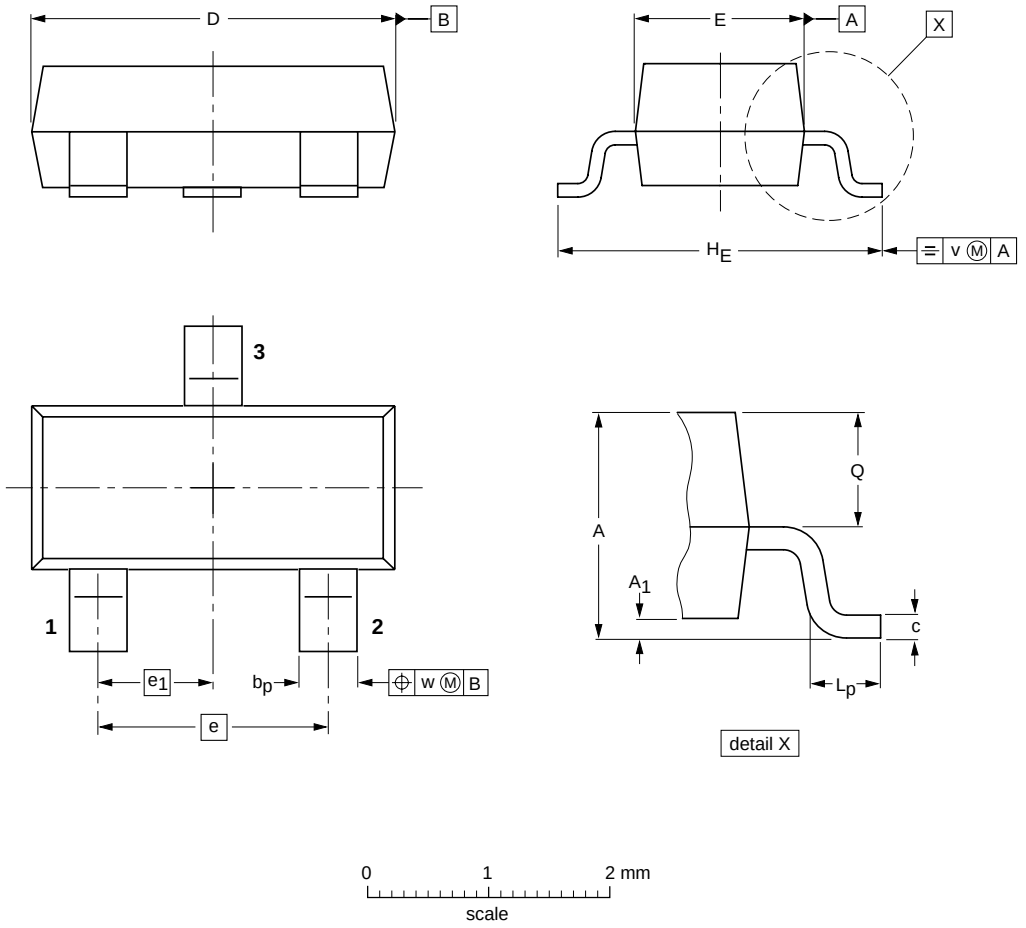


**DIMENSIONS (mm are the original dimensions)**

| UNIT | A | $A_1$ max. | $b_p$ | c | D | E | e | $e_1$ | $H_E$ | $L_p$ | Q | v | w |
|---|---|---|---|---|---|---|---|---|---|---|---|---|---|
| mm | 1.1<br>0.9 | 0.1 | 0.48<br>0.38 | 0.15<br>0.09 | 3.0<br>2.8 | 1.4<br>1.2 | 1.9 | 0.95 | 2.5<br>2.1 | 0.45<br>0.15 | 0.55<br>0.45 | 0.2 | 0.1 |

| OUTLINE VERSION | REFERENCES | | | | EUROPEAN PROJECTION | ISSUE DATE |
|---|---|---|---|---|---|---|
| | IEC | JEDEC | JEITA | | | |
| SOT23 | | TO-236AB | | | | ~~04-11-04~~<br>06-03-16 |

**Plastic surface-mounted package; 3 leads** **SOT323**

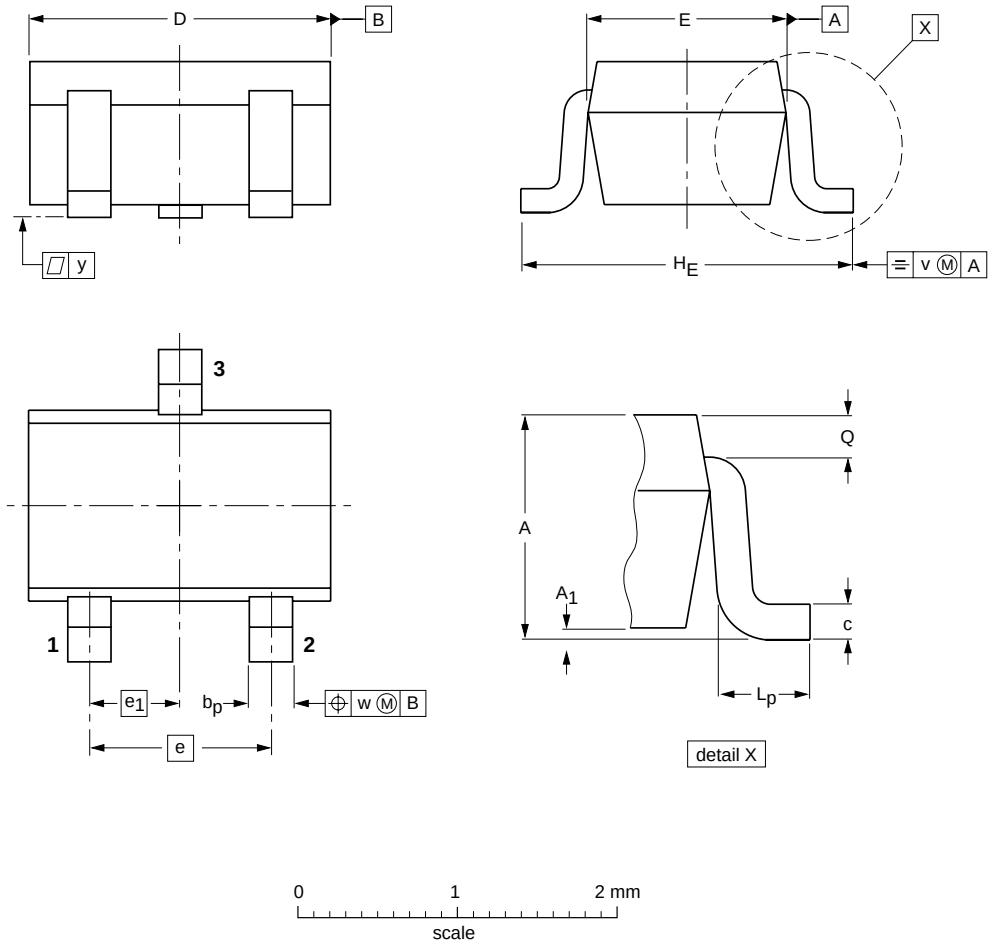


**DIMENSIONS (mm are the original dimensions)**

| UNIT | A | $A_1$ max | $b_p$ | c | D | E | e | $e_1$ | $H_E$ | $L_p$ | Q | v | w |
|---|---|---|---|---|---|---|---|---|---|---|---|---|---|
| mm | 1.1<br>0.8 | 0.1 | 0.4<br>0.3 | 0.25<br>0.10 | 2.2<br>1.8 | 1.35<br>1.15 | 1.3 | 0.65 | 2.2<br>2.0 | 0.45<br>0.15 | 0.23<br>0.13 | 0.2 | 0.2 |

| OUTLINE VERSION | REFERENCES | | | | EUROPEAN PROJECTION | ISSUE DATE |
|---|---|---|---|---|---|---|
| | IEC | JEDEC | JEITA | | | |
| SOT323 | | | SC-70 | | | ~~04-11-04~~<br>06-03-16 |

**DATA SHEET STATUS**

| DOCUMENT STATUS[1] | PRODUCT STATUS[2] | DEFINITION |
|---|---|---|
| Objective data sheet | Development | This document contains data from the objective specification for product development. |
| Preliminary data sheet | Qualification | This document contains data from the preliminary specification. |
| Product data sheet | Production | This document contains the product specification. |

**Notes**

1. Please consult the most recently issued document before initiating or completing a design.
2. The product status of device(s) described in this document may have changed since this document was published and may differ in case of multiple devices. The latest product status information is available on the Internet at URL http://www.nxp.com.

**DISCLAIMERS**

**General** — Information in this document is believed to be accurate and reliable. However, NXP Semiconductors does not give any representations or warranties, expressed or implied, as to the accuracy or completeness of such information and shall have no liability for the consequences of use of such information.

**Right to make changes** — NXP Semiconductors reserves the right to make changes to information published in this document, including without limitation specifications and product descriptions, at any time and without notice. This document supersedes and replaces all information supplied prior to the publication hereof.

**Suitability for use** — NXP Semiconductors products are not designed, authorized or warranted to be suitable for use in medical, military, aircraft, space or life support equipment, nor in applications where failure or malfunction of an NXP Semiconductors product can reasonably be expected to result in personal injury, death or severe property or environmental damage. NXP Semiconductors accepts no liability for inclusion and/or use of NXP Semiconductors products in such equipment or applications and therefore such inclusion and/or use is at the customer's own risk.

**Applications** — Applications that are described herein for any of these products are for illustrative purposes only. NXP Semiconductors makes no representation or warranty that such applications will be suitable for the specified use without further testing or modification.

**Limiting values** — Stress above one or more limiting values (as defined in the Absolute Maximum Ratings System of IEC 60134) may cause permanent damage to the device. Limiting values are stress ratings only and operation of the device at these or any other conditions above those given in the Characteristics sections of this document is not implied. Exposure to limiting values for extended periods may affect device reliability.

**Terms and conditions of sale** — NXP Semiconductors products are sold subject to the general terms and conditions of commercial sale, as published at http://www.nxp.com/profile/terms, including those pertaining to warranty, intellectual property rights infringement and limitation of liability, unless explicitly otherwise agreed to in writing by NXP Semiconductors. In case of any inconsistency or conflict between information in this document and such terms and conditions, the latter will prevail.

**No offer to sell or license** — Nothing in this document may be interpreted or construed as an offer to sell products that is open for acceptance or the grant, conveyance or implication of any license under any copyrights, patents or other industrial or intellectual property rights.

**Export control** — This document as well as the item(s) described herein may be subject to export control regulations. Export might require a prior authorization from national authorities.

**Quick reference data** — The Quick reference data is an extract of the product data given in the Limiting values and Characteristics sections of this document, and as such is not complete, exhaustive or legally binding.

# *NXP Semiconductors*

**Customer notification**

This data sheet was changed to reflect the new company name NXP Semiconductors, including new legal definitions and disclaimers. No changes were made to the technical content, except for package outline drawings which were updated to the latest version.

**Contact information**

For additional information please visit: **http://www.nxp.com**
For sales offices addresses send e-mail to: **salesaddresses@nxp.com**

© NXP B.V. 2009

All rights are reserved. Reproduction in whole or in part is prohibited without the prior written consent of the copyright owner.

The information presented in this document does not form part of any quotation or contract, is believed to be accurate and reliable and may be changed without notice. No liability will be accepted by the publisher for any consequence of its use. Publication thereof does not convey nor imply any license under patent- or other industrial or intellectual property rights.

Printed in The Netherlands R75/07/pp14 Date of release: 2004 Aug 17 Document order number: 9397 750 13669

founded by

PHILIPS