MATERIAL AND FINISH:
Insulator: PVC, black
Wire leads: PVC, 26 AWG
Snaps: Brass, Nickel plated

RoHS COMPLIANT

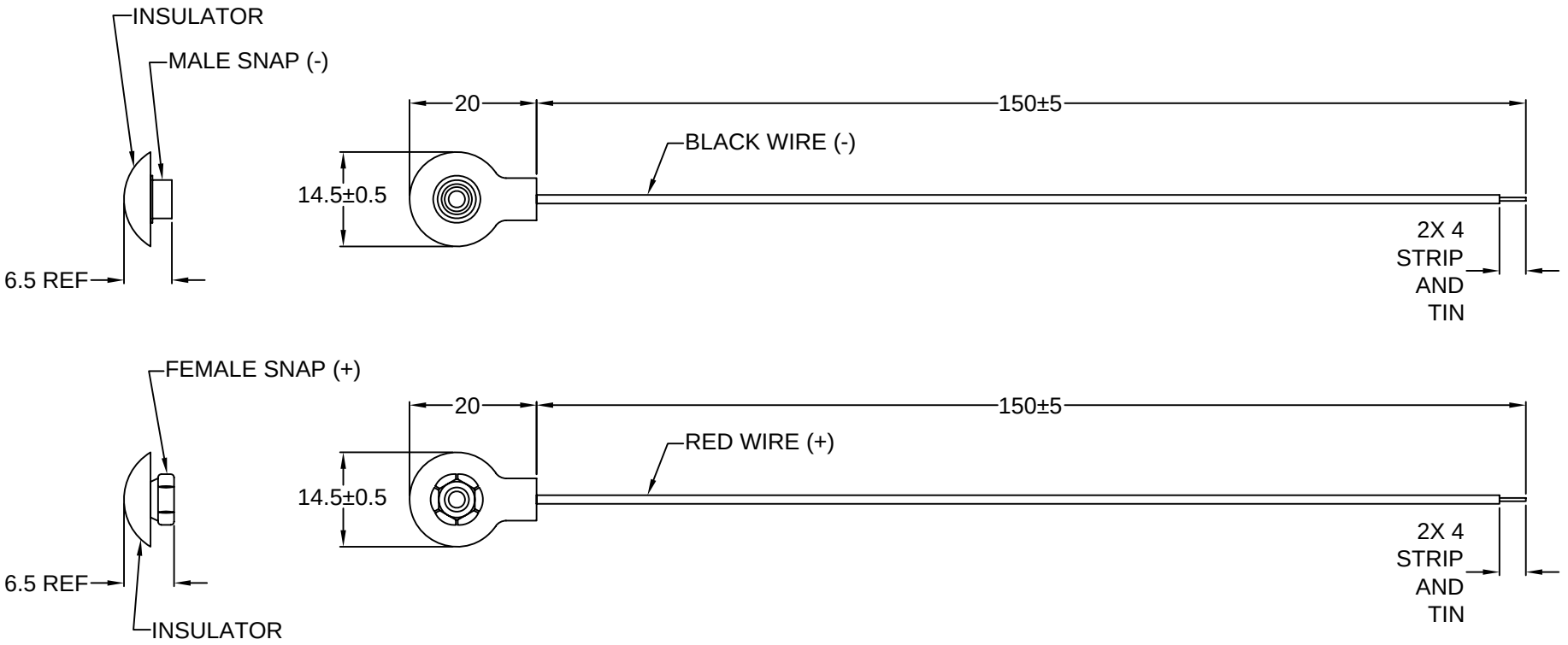

REVISIONS

REV	DATE	CHANGE	CHNG	CHCK	APPR

TOLERANCE
UNLESS OTHERWISE SPECIFIED
X ± 1
X.X ± 0.4
X.XX ± 0.20

DRAWN BY	GQ	DATE:	06/11/02
CHECK BY	TD	DATE:	06/12/02
APPR BY	PB	DATE:	06/12/02

Power Dynamics, Inc.
Phone: 973 560-0019 Whippany, New Jersey Fax: 973 560-0076

PART: 9V BATTERY SNAP SET
WITH PVC COVER

PART #: PDSN-9

SHEET 1 of 1

SIZE: A

SCALE: NTS

ALL DIMENSIONS FOR REFERENCE ONLY
DIMENSIONS ARE IN MILLIMETERS

REV: