REV.	DESCRIPTION	DATE
A	NEW DRAWING	12/1/2008

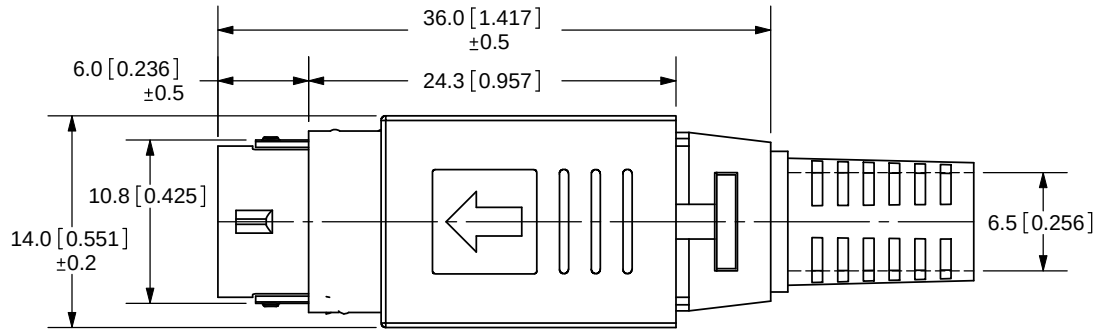

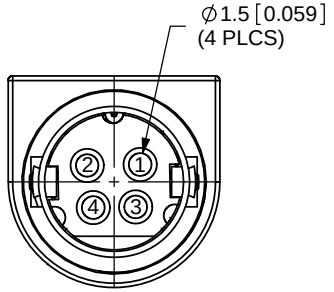

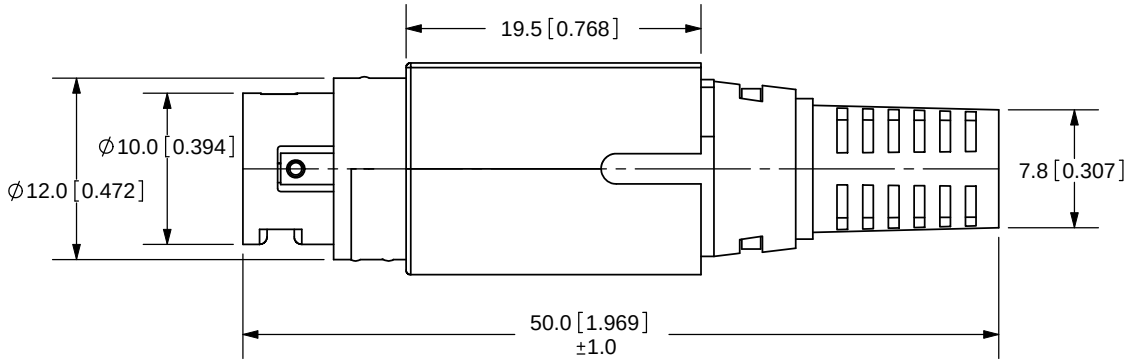

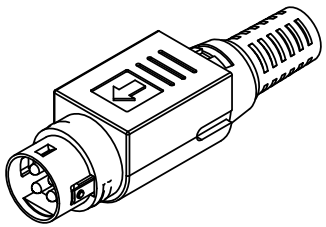

SCALE: 1:2

SPECIFICATIONS:
RATING: 20V DC @ 7.5A
INSULATION RESISTANCE: 50M OHMS MIN: 250V DC
VOLTAGE WITHSTAND: 250V AC R.M.S. FOR 1 MINUTE
LIFE: 5,000 CYCLES

	MATERIAL	PLATING
OUTER HOOD	ABS	
METAL SLEEVE	Brass	Nickel
CLAMP	Brass	Nickel
PIN/BODY	Brass/PBT	Silver
PLASTIC RING	POM	
METAL COVER	Brass	Nickel
SPRING	Steel	
INNER HOOD	ABS	
STRAIN RELIEF	PVC	

TOLERANCE:
±0.2mm UNLESS OTHERWISE SPECIFIED

RoHS

CUI INC

20050 SW 112th Ave.
Tualatin, OR 97062
Phone: 503-612-2300
800-275-4899
Fax: 503-612-2383
Website: www.cui.com

TITLE: 4-PIN POWER DIN PLUG		REV: A
PART NO. PDP-40	UNITS: MM [INCHES]	
DRAWN BY: ZRJ	APPROVED BY:	SCALE: 2:1

PC FILE NAME: PDP-40

COPYRIGHT 2008 BY CUI INC.

1	outer hood	6	metal cover
2	metal sleeve	7	spring
3	clamp	8	inner hood
4	pin body	9	strain relief
5	plastic ring		

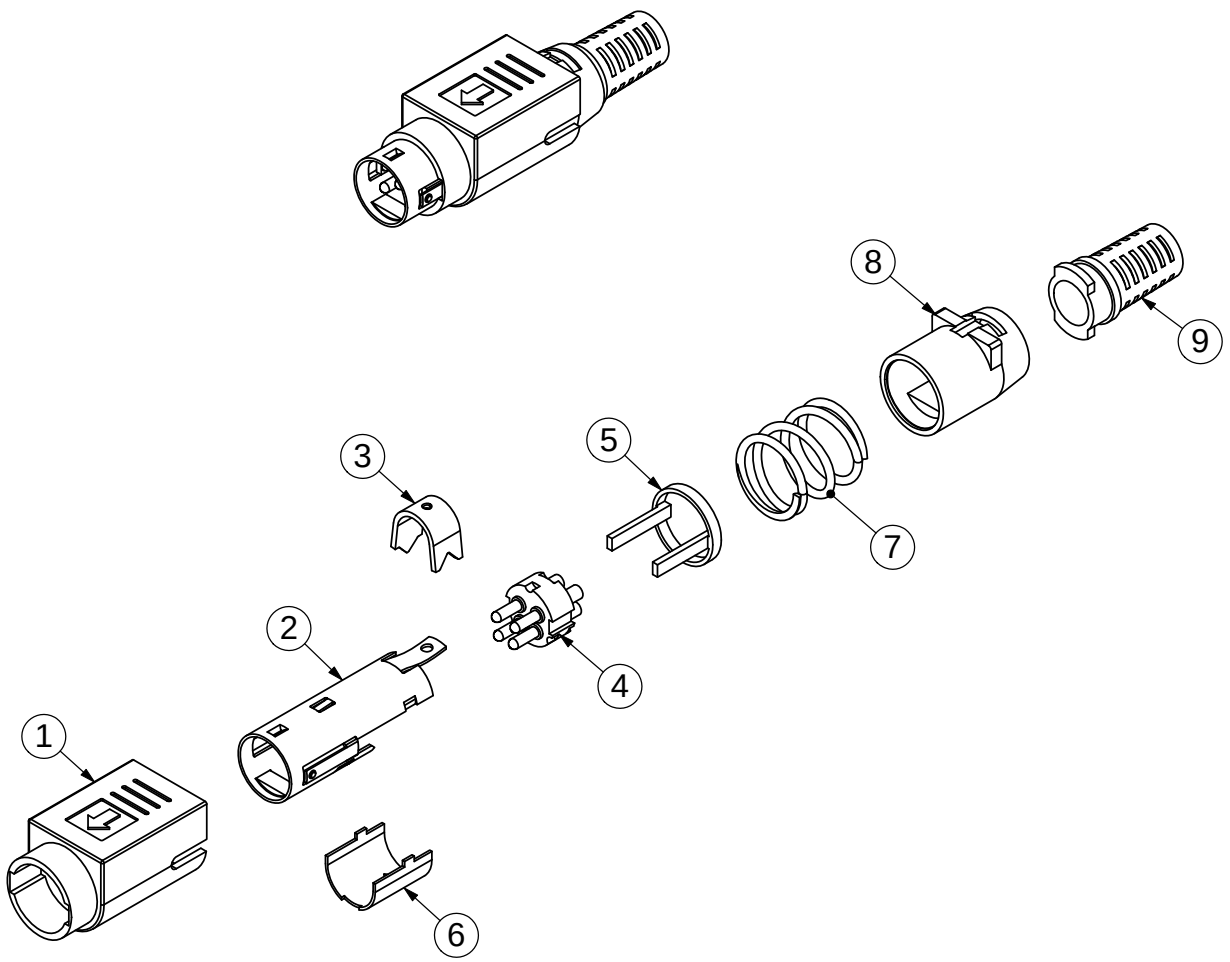

TITLE: 4-PIN POWER DIN PLUG		REV: A
PART NO. PDP-40	UNITS: MM [INCHES]	
DRAWN BY: ZRJ	APPROVED BY:	SCALE: 1:1

PC FILE NAME: PDP-40

COPYRIGHT 2008 BY CUI INC.

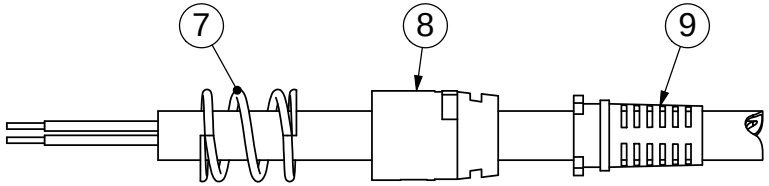

STEP 1
insert strain relief (**9**), inner hood (**8**), and spring (**7**) onto cable

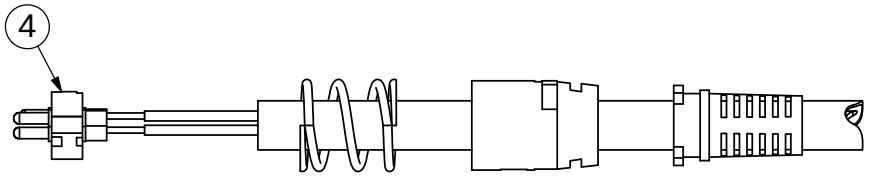

STEP 2
solder wires to contacts on pin body (**4**)

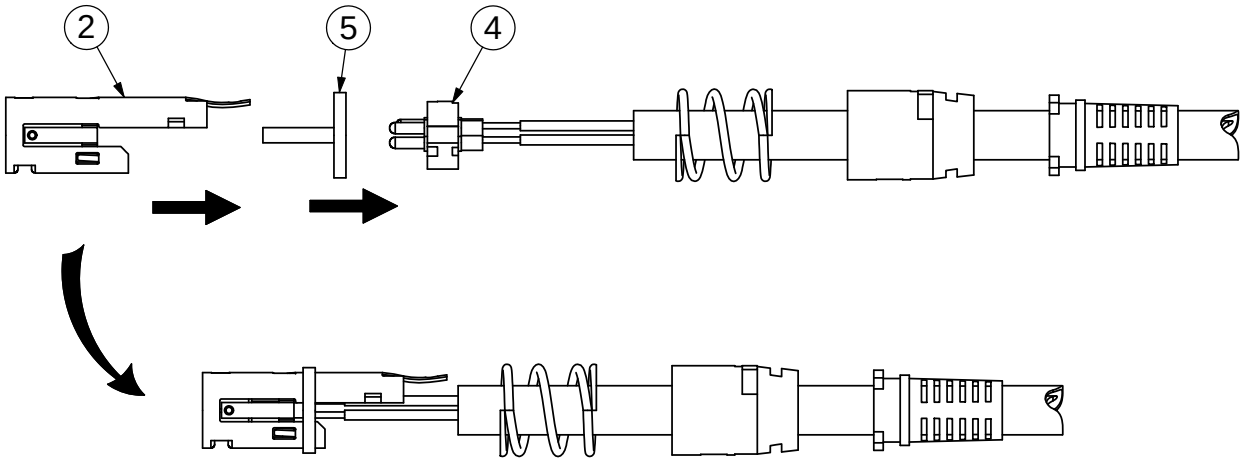

STEP 3
push pin body (**4**) and plastic ring (**5**) into metal sleeve (**2**)

TITLE: 4-PIN POWER DIN PLUG			REV: A
PART NO. PDP-40		UNITS: MM [INCHES]	
DRAWN BY: ZRJ	APPROVED BY:		SCALE: 1:1

PC FILE NAME: PDP-40

COPYRIGHT 2008 BY CUI INC.

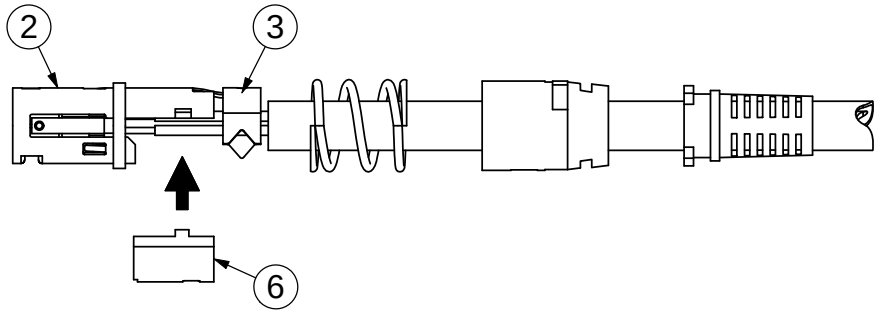

STEP 4
crimp the clamp (**3**) onto wires, assemble metal cover (**6**) onto metal sleeve (**2**)

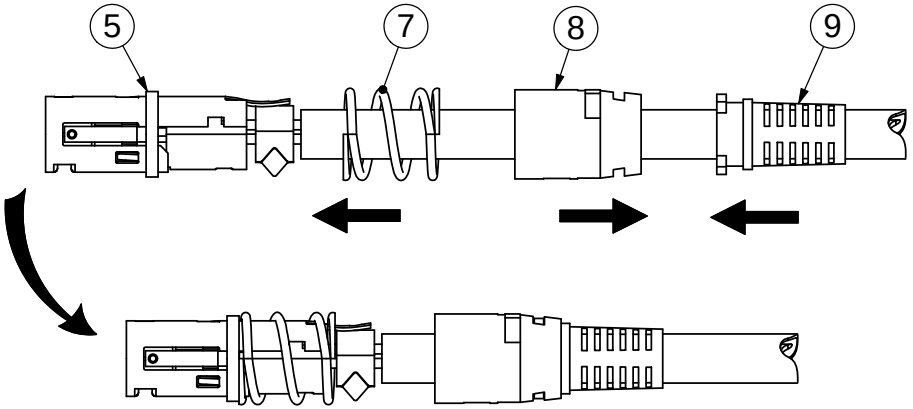

STEP 5
push spring (**7**) up to plastic ring (**5**), assemble inner hood (**8**) and strain relief (**9**) together

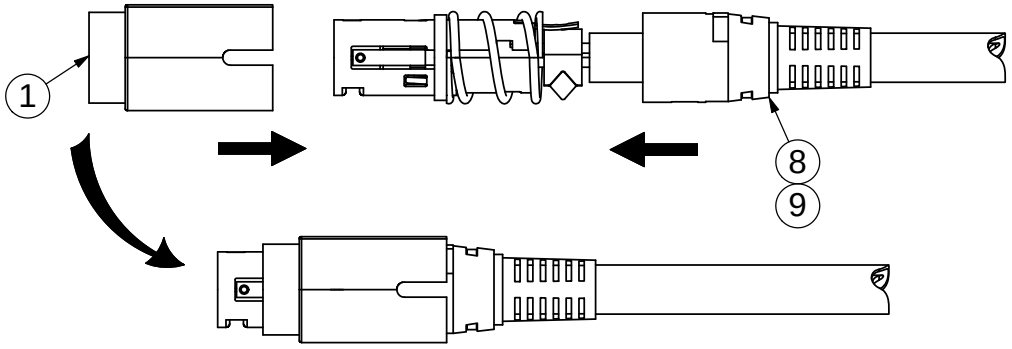

STEP 6
push outer hood (**1**) and inner hood/ strain relief (**8**,**9**) together

TITLE: 4-PIN POWER DIN PLUG		REV: A
PART NO. PDP-40	UNITS: MM [INCHES]	
DRAWN BY: ZRJ	APPROVED BY:	SCALE: 1:1

PC FILE NAME: PDP-40

COPYRIGHT 2008 BY CUI INC.