LUNA OPTOELECTRONICS

SMT Photodiode
PDB-C171SM

WWW.LUNAINC.COM **Precision – Control – Results**

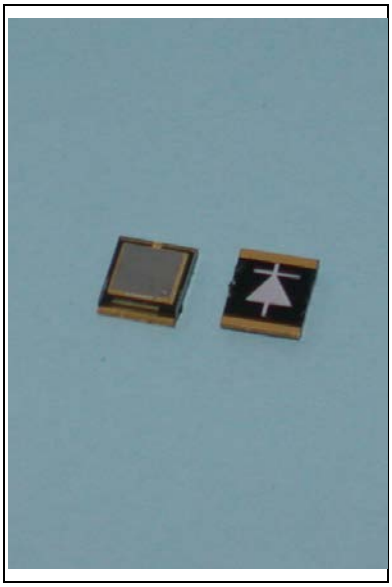

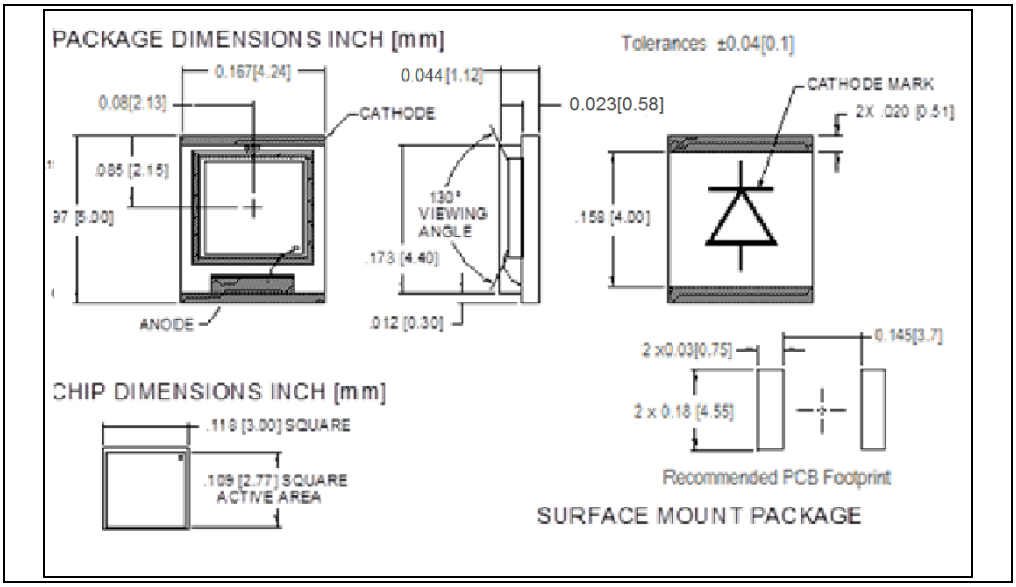

DESCRIPTION

The **PDB-C171SM** is a blue enhanced PIN silicon photodiode ideal for high speed photoconductive or photovoltaic applications assembled in a compact surface mount package.SMD package classified as a sensitivity level 2.

FEATURES

- Surface Mount
- Photoconductive
- High Speed
- Low cost

RELIABILITY

Contact Luna for recommendations on specific test conditions and procedures.

APPLICATIONS

- Photointerrrupters
- Oximeter sensors
- Barcode
- Glucometers

RoHS

ABSOLUTE MAXIMUM RATINGS

SYMBOL	MIN		MAX	UNITS	
Reverse Voltage	-	-	60	V	T_a = 23°C UNLESS OTHERWISE NOTED
Storage Temperature	-40	-	+80	°C	-
Operating Temperature	-40	to	+100	°C	-
Soldering Temperature	-	-	+260	°C	-
Wavelength Range	400	-	1050	Nm	
Maximum Power Dissipation	-	-	215	MW	

* 1/16 inch from case for 3 seconds max.

Information in this technical datasheet is believed to be correct and reliable. However, no responsibility is assumed for possible inaccuracies or omission. Specifications are subject to change without notice.

REV 01-04-16

© 2016 Luna Optoelectronics. All rights reserved.

Luna Optoelectronics, 1240 Avenida Acaso, Camarillo CA 93012 • Phone (805) 987-0146 • Fax (805) 484-9935

OPTO-ELECTRICAL PARAMETERS

T_a = 23°C UNLESS NOTED OTHERWISE

PARAMETER	TEST CONDITIONS	MIN	TYP	MAX	UNITS
Breakdown Voltage	I_{bias} = 10 µA	60	-	-	V
Responsivity	λ= 900 nm	0.60	0.68	-	A/W
Responsivity	λ= 1050 nm	-	0.3	-	A/W
Dark Current	V_{bias} = 10V	-	2	30	nA
Capacitance	V_{bias} = 3V; f = 1 MHz	-	25	-	pF
Rise Time (1KΩ load)	V_{bias} = 10V; λ= 820 nm	-	100	-	ns
Noise Equivalent Power	λ= 950 nm Vr=10V	-	$4X10^{-14}$	-	W/√Hz

TYPICAL PERFORMANCE

SPECTRAL RESPONSE

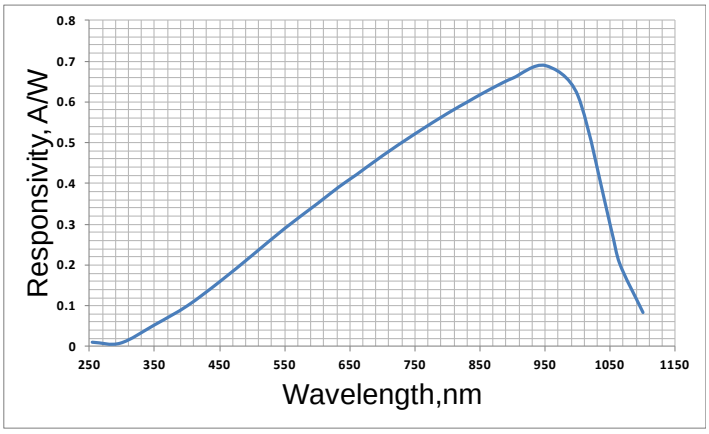

Information in this technical datasheet is believed to be correct and reliable. However, no responsibility is assumed for possible inaccuracies or omission. Specifications are subject to change without notice.

© 2016 Luna Optoelectronics. All rights reserved.

Luna Optoelectronics, 1240 Avenida Acaso, Camarillo CA 93012 • Phone (805) 987-0146 • Fax (805) 484-9935