Photodiode in Plastic Surface Mount Package

PDB-C150SM

WWW.LUNAINC.COM **Precision – Control – Results**



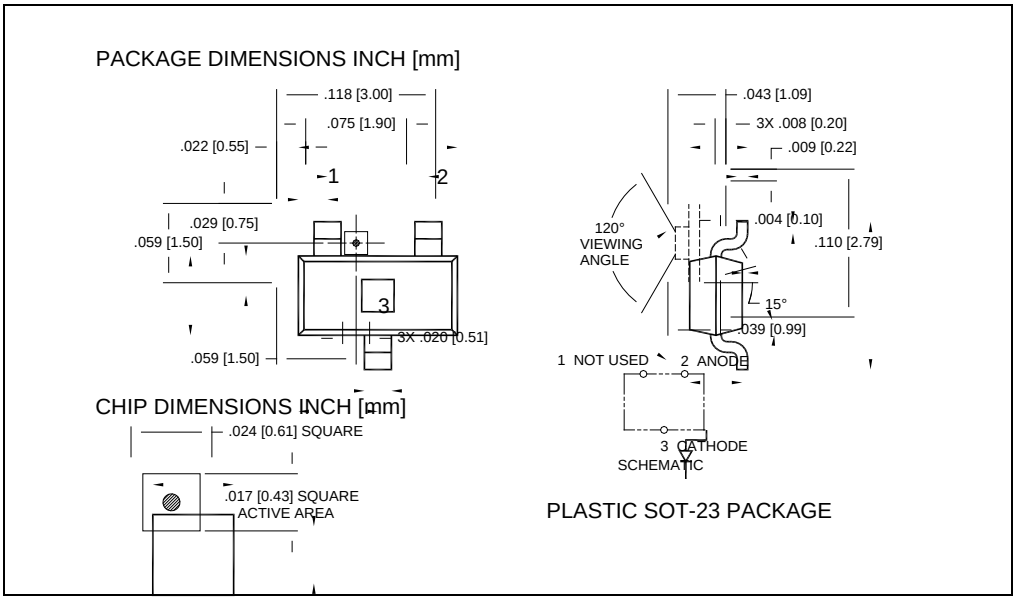

DESCRIPTION

The **PDB-C150SM** is a blue enhanced PIN silicon photodiode in a photoconductive mode packaged in a water clear SOT-23 surface mount package.

.

FEATURES

- Surface Mount
- Photoconductive
- High Speed
- Low cost

RELIABILITY

Contact Luna for recommendations on specific test conditions and procedures.

APPLICATIONS

- Industrial Control
- Opto Switches
- Opto Counters

RoHS

ABSOLUTE MAXIMUM RATINGS

SYMBOL	MIN		MAX	UNITS	
Reverse Voltage	-	-	50	V	T_a = 23°C UNLESS OTHERWISE NOTED
Storage Temperature	-40	-	+125	°C	-
Operating Temperature	-40	to	+80	°C	-
Soldering Temperature*	-	-	+260	°C	-

* 1/16 inch from case for 3 seconds max.

Information in this technical datasheet is believed to be correct and reliable. However, no responsibility is assumed for possible inaccuracies or omission. Specifications are subject to change without notice.

REV 01-04-16

© 2016 Luna Optoelectronics. All rights reserved.

Luna Optoelectronics, 1240 Avenida Acaso, Camarillo CA 93012 • Phone (805) 987-0146 • Fax (805) 484-9935

OPTO-ELECTRICAL PARAMETERS

T_a = 23°C UNLESS NOTED OTHERWISE

PARAMETER	TEST CONDITIONS	MIN	TYP	MAX	UNITS
Short Circuit Current	H= 100 fc, 2850 K	1	2	-	µA
Dark Current	V_R = 10 V	-	2	30	nA
Shunt Resistance	V_R = 10 mV	-	100	-	MΩ
Junction Capacitance	V_R =10V; f = 1 MHz	-	1	5	pF
Spectral Application Range	Spot Scan	400	-	1100	nm
Breakdown Voltage	I=10 µA	30	100	-	V
Noise Equivalent Power	V_R =10V@λ= Peak	-	$2.5x10^{-15}$	-	W/ $\sqrt{}$ Hz
Response Time**	RL = 50Ω,V_R = 50 V	-	6.0	-	nS

**Response time of 10% to 90% is specified at 660nm wavelength light.

TYPICAL PERFORMANCE

SPECTRAL RESPONSE

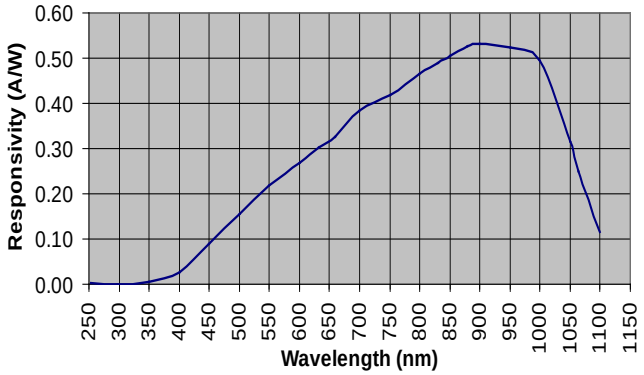

Information in this technical datasheet is believed to be correct and reliable. However, no responsibility is assumed for possible inaccuracies or omission. Specifications are subject to change without notice.

© 2016 Luna Optoelectronics. All rights reserved.

Luna Optoelectronics, 1240 Avenida Acaso, Camarillo CA 93012 • Phone (805) 987-0146 • Fax (805) 484-9935