PRIME VIEW

Version : 8.0

TECHNICAL SPECIFICATION

MODEL NO. : PD064VT4

☐Customer's Confirmation

Customer _____

PD064VT4

By _____

☐PVI's Confirmation

Confirmed By _____

Prepared By _____

FOR MORE INFORMATION:
AZ DISPLAYS, INC.
75 COLUMBIA, ALISO VIEJO, CA, 92656
Http://www.AZDISPLAYS.com

Date: July 11, 2007

This technical specification is subject to change without notice.

The information contained herein is the exclusive property of Prime View International Co., Ltd. and shall not be distributed, reproduced, or disclosed in whole or in part without prior written permission of Prime View International Co., Ltd.

Revision History

Rev.	Eng.	Issued Date	Revised Contents
1.0		Mar 11,2004	New
1.1		Mar 12,2004	Modify Page 3. Mechanical Specifications (Weight from 270g to 340g) Page 4. Mechanical Drawing of TFT-LCD Module (Module with back cover)
1.2		Nov 01,2004	Modify Page7: 7-2)Recommended Operation Condition for backlight Kick off voltage(25℃) from 790 to 970 Add: Kick-off voltage(0℃) Page22: Packing drawing
1.3		Jan 11,2005	Remove Page 20: Indication of Lot Number Label Add Page 20: Reliability (Note the protective film must be remove before temperature test)
1.4		Dec 05,2005	Page4 Mechanical Drawing of TFT-LCD Module 1.Add screw torsion SPEC.(1.5kgf-cm , Max) 2.Modify switch1 Pin NO. from 9 pins to 8 Pins 3.Modify switch1 Pin NO. from 3 pins to 2 Pins Page14 7-8)Control Board Dip switch Format SW1-2 (Rework): form Default(ON) modify to Default(OFF) SW1-3 (Rework) :form Default(OFF) modify to Default(ON) SW1-4 (Rework): form Default(OFF) modify to Default(ON)
1.5	蔡弘毅	Apr 28 2006,	Page8: 7-4)Input/ Output signal timing chart Hsync (Back-porch) Typ. From 48tc modify to 46tc Hsync(Front-porch) Typ. From 16tc modify to 18tc Hsync(Hpw+Hbp) Typ. From 144 tc modify to 142 tc Page14 7-8)Control Board Dip switch Format SW1-2 (Rework): form Default(OFF) modify to Default(ON) SW1-3 (Rework) :form Default(ON) modify to Default(OFF) SW1-4 (Rework): form Default(ON) modify to Default(OFF)
1.6	蔡弘毅	May 23, 2006	Page 16 9. Optical Characteristic 9-1) Specification : lamp life time from 20,000(typ)hrs modify to 50,000 (Min)
8.0	黃秀晶	July 11, 2007	Remove “Revision History” from Page23 to Page2 Modify Page2 Revision from 1.7 to 8.0

The information contained herein is the exclusive property of Prime View International Co., Ltd. and shall not be distributed, reproduced, or disclosed in whole or in part without prior written permission of Prime View International Co., Ltd.

TECHN*ICAL SPECIFICATION*

CONTENTS

NO.	*ITEM*	*PAGE*
-	Cover	1
-	Revision History	2
-	Contents	3
1	Application	4
2	Features	4
3	Mechanical Specifications	4
4	Mechanical Drawing of TFT-LCD module	5
5	Input / Output Terminals	6
6	Absolute Maximum Ratings	7
7	Electrical Characteristics	8
8	Power On Sequence	15
9	Optical Characteristics	16
10	Handling Cautions	19
11	Reliability Test	20
12	Block Diagram	21
13	Packing	22

The information contained herein is the exclusive property of Prime View International Co., Ltd. and shall not be distributed, reproduced, or disclosed in whole or in part without prior written permission of Prime View International Co., Ltd.

1. Application

This product applies computer peripheral, industrial meter, image communication and multi-media.

2. Features

. Compatible with VGA-480, VGA-400, VGA-350 mode
. Support the DENB mode
. Pixel in stripe configuration
. Slim and compact
. Display Colors: 262,144 colors
. Image Reversion: Up/Down and Left/Right
. Backlight lamps are Replaceable

3. Mechanical Specifications

Parameter	Specifications	Unit
Screen Size	6.4 (diagonal)	inch
Display Format	640X(R,G,B)X480	dot
Active Area	129.6 (H)X97.44 (V)	mm
Pixel Pitch	0.2025 (H)X0.203 (V)	mm
Pixel Configuration	Stripe	
Surface Treatment	Anti – Glare &Wide View film	
Outline Dimension	175.4 (W)X126.9 (H)X12.5 (D) (Typ.)	mm
Weight	340±10	g
Gray scale inversion direction	6 o’clock [ref to Page 16 viewing angle]	

The information contained herein is the exclusive property of Prime View International Co., Ltd. and shall not be distributed, reproduced, or disclosed in whole or in part without prior written permission of Prime View International Co., Ltd.

4. Mechanical Drawing of TFT-LCD Module

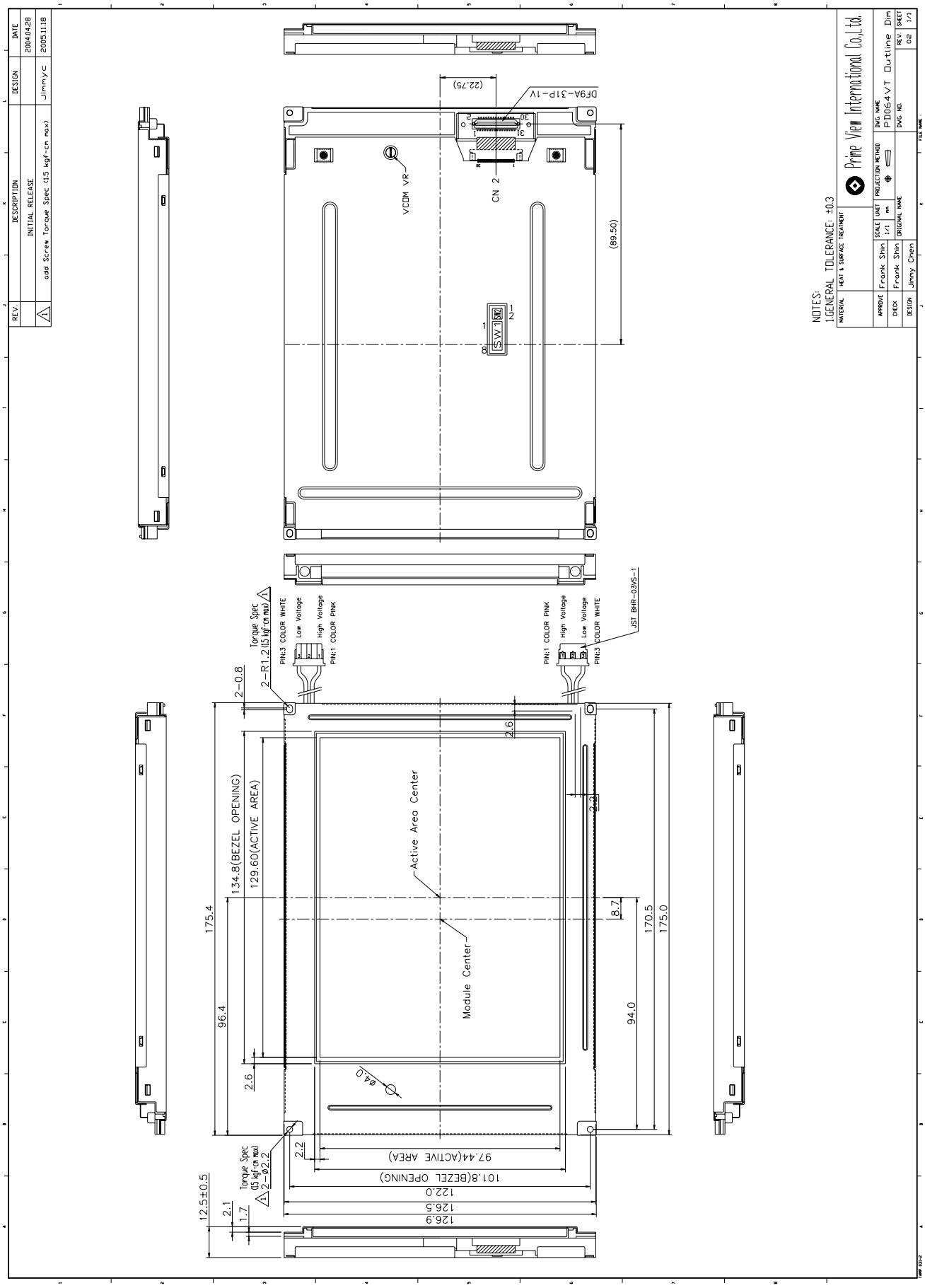

The information contained herein is the exclusive property of Prime View International Co., Ltd. and shall not be distributed, reproduced, or disclosed in whole or in part without prior written permission of Prime View International Co., Ltd.

5. Input / Output Terminals

5-1) TFT-LCD Panel Driving

LCD module connector (Reference)-DF9A-31P-1V

Pin No.	Symbol	Function	Remark
1	GND	Ground (0V)	
2	CLK	Clock Signal for Sampling Image Digital Data	
3	Hsync	Horizontal Synchronous Signal	Note 5-1
4	Vsync	Vertical Synchronous Signal	
5	GND	Ground (0V)	
6	R0	Red Image Data Signal (LSB)	
7	R1	Red Image Data Signal	
8	R2	Red Image Data Signal	
9	R3	Red Image Data Signal	
10	R4	Red Image Data Signal	
11	R5	Red Image Data Signal (MSB)	
12	GND	Ground (0V)	
13	G0	Green Image Data Signal (LSB)	
14	G1	Green Image Data Signal	
15	G2	Green Image Data Signal	
16	G3	Green Image Data Signal	
17	G4	Green Image Data Signal	
18	G5	Green Image Data Signal (MSB)	
19	GND	Ground (0V)	
20	B0	Blue Image Data Signal (LSB)	
21	B1	Blue Image Data Signal	
22	B2	Blue Image Data Signal	
23	B3	Blue Image Data Signal	
24	B4	Blue Image Data Signal	
25	B5	Blue Image Data Signal (MSB)	
26	GND	Ground (0V)	
27	DENB	Enable	Note 5-1 Note 5-2
28	VCC	DC +5.0V Power Supply	Note 5-3
29	VCC	DC +5.0V Power Supply	Note 5-3
30	R/L	Horizontal Image Shift-direction Select Signal	Note 5-4
31	U/D	Vertical Image Shift-direction Select Signal	Note 5-5

Note 5-1 : The relationship between DENB & SYNC. mode

1. DENB mode with the top priority.
2. When working with the SYNC. mode , the TFT-LCD module is compatible with three kinds of VGA timing . They are VGA-480 , VGA-400 and VGA-350 mode . The polarization of Hsync and Vsync determine the timings.

Mode / SYNC.	DENB	VGA-480	VGA-400	VGA-350
Hsync Polarization	Don’t care	Negative / Positive	Negative	Positive
Vsync Polarization	Don’t care	Negative / Positive	Positive	Negative

The information contained herein is the exclusive property of Prime View International Co., Ltd. and shall not be distributed, reproduced, or disclosed in whole or in part without prior written permission of Prime View International Co., Ltd.

Note 5-2 : DENB input signal.

If customer wanted to off the DENB mode , you must keep the DENB (pin 27) always High or Low.

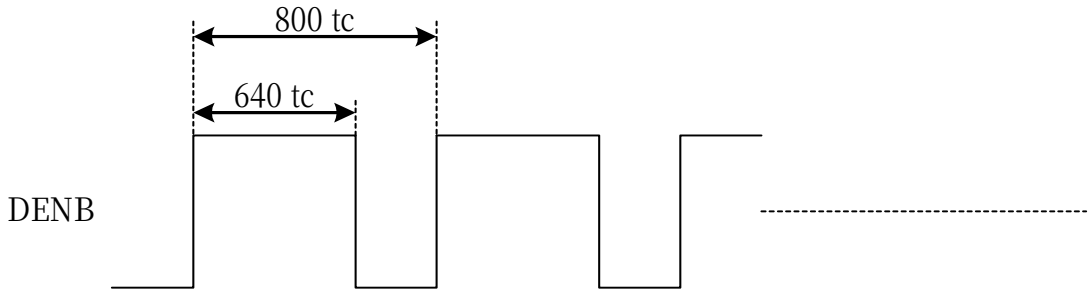

(tc: the period of sampling clock)

Note 5-3 : V_{CC} (TYP.)=+5V

Note 5-4 , 5-5 : The definitions of U/D & R/L

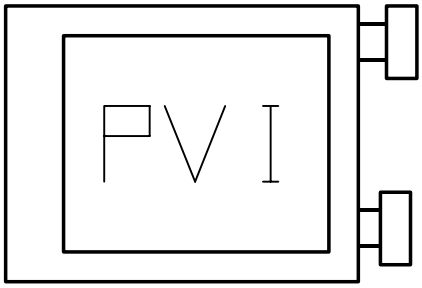

R/L(PIN 30)= High , U/D(PIN 31)= Low

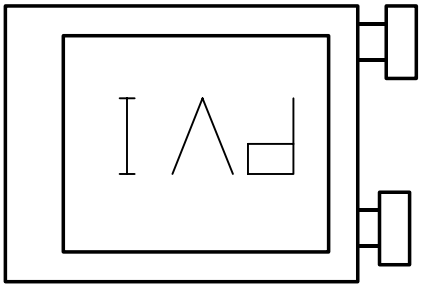

R/L(PIN 30)= Low , U/D(PIN 31)= High

6. Absolute Maximum Ratings :

The followings are maximum values , which if exceeded, may cause faulty operation or damage to the unit.

GND=0V, Ta=25℃

Parameters	Symbol	MIN.	MAX.	Unit	Remark
Supply Voltage	V_{CC}	-0.3	+7.0	V	
Input Signals Voltage	V_{sig}	-0.3	V_{CC}+0.3	V	Note 6-1

Note 6-1 : Input signals include CLK , Hsync , Vsync , DENB , R[0:5] , G[0:5] and B[0:5].

The information contained herein is the exclusive property of Prime View International Co., Ltd. and shall not be distributed, reproduced, or disclosed in whole or in part without prior written permission of Prime View International Co., Ltd.

7. Electrical Characteristics

7-1) Recommended Operating Condition for TFT-LCD panel :

GND = 0V , Ta = 25℃

Parameters	Symbol	Min.	Typ.	Max.	Unit	Remark
Supply Voltage	V_{CC}	+4.75	+5.0	+5.25	V	
Supply Input Ripple Voltage	V_{CCRP}	-	-	0.1	Vp-p	V_{CC}=+5V
Input Signals Voltage (High)	V_{IH}	+2.6	-	-	V	
Input Signals Voltage (Low)	V_{IL}	-	-	+0.5	V	

7-2) Recommended Operating Condition for backlight:

Ta = 25℃

Item	Symbol	Min.	Typ.	Max.	Unit	Remark
Lamp Current	I_L	3	6	7	mA	Note 7-1
Lamp Voltage	V_L	330	360	390	Vrms	I_L=6mA
Lamp frequency	P_L	-	40	-	KHz	Note 7-2
Starting voltage(25℃) (Reference Value)	V_S	-	475	523	Vrms	Note 7-3
Starting voltage(0℃) (Reference Value)	V_S	-	620	682	Vrms	Note 7-3

Note 7-1 : In order to satisfy the quality of B/L , no matter use what kind of inverter , the output lamp current must between Min. and Max. to avoid the abnormal display image caused by B/L.

Note 7-2: The waveform of lamp driving voltage should be as closed to a perfect SIN wave as possible.

Note 7-3 : The" Max of starting voltage " means the minimum voltage of inverter to turn on the CCFL. and it should be applied to the lamp for more than 1 second to start up. Otherwise the lamp may not be turned on.

Backlight driving connector: JST BHR-03VS-1 , 3 Pins, Pitch : 4 mm

Pin No	Symbol	Description	Remark
1	VL1	Input terminal (Hi voltage side)	
2	NC	No Connection	
3	VL2	Input terminal (Low voltage side)	Note 7-4

Note 7-4 : Low voltage side of backlight inverter connects with ground of inverter circuits.

7-3) Power Consumption

Parameters	Symbol	Typ.	Max.	Unit	Remark
Current Dissipation	I_{CC}	100	120	mA	V_{CC} =+5V
LCD Panel Power consumption (W/O B/L)	-	0.5	0.6	W	-
Backlight Power Consumption	-	4.32	-	W	Note 7-5

Note 7-5 : Backlight lamp power consumption is calculated by I_L X V_L.

The information contained herein is the exclusive property of Prime View International Co., Ltd. and shall not be distributed, reproduced, or disclosed in whole or in part without prior written permission of Prime View International Co., Ltd.

7-4) Input / Output signal timing chart

Parameters		Symbol	Format	Min.	Typ.	Max.	Unit	Note
CLK	Frequency	Fc=1/tc	All	-	25.175	-	MHz	Note 7-6
		tc	All	-	40	-	ns	
Hsync	Period	Hp	All	-	31.778	-	us	
				-	800	-	tc	
	Display period	Hd	All	-	640	-	tc	
	Pulse width	Hpw	All	12	96	139	tc	
	Back-porch	Hbp	All	12	46	139	tc	
	Front-porch	Hfp	All	-	18	-	tc	
	Hpw+Hbp		All	136	142	151	tc	
	Hsync-CLK	Hhc	All	10	-	Tc-10	ns	
	Vsync-Hsync	Hvh	All	0	0	200	tc	
Vsync	Period	Vp	480	-	16.8	-	ms	
				515	525	800	Hp	
			400	-	14.3	-	ms	
				446	449	480	Hp	
			350	-	14.3	-	ms	
				447	449	510	Hp	
	Display period	Vdp	480	-	480	-	Hp	
			400	-	400	-		
			350	-	350	-		
	Pulse width	Vpw	All	2	2	35	Hp	
	Back-porch	Vbp	480	2	33	35	Hp	
			400	2	35	38		
			350	2	60	63		
	Front-porch	Vfp	480	1	10	-	Hp	
			400	1	12	-		
			350	1	37	-		
	Vpw+Vbp		480	31	35	38	Hp	
			400	33	37	40		
			350	58	62	65		
Data	CLK-DATA	Dcd	All	10	-	-	ns	
	DATA-CLK	Ddc	All	10	-	-	ns	
DENB	Horizontal scanning period	T1	All	780	800	900	tc	
	Horizontal display period	T2	All	-	640	-	tc	
	Vertical display period	T3	All	-	480	-	T1	
	Frame cycling period	T4	All	515	525	800	T1	

Note 7-6 : tc is the period of sampling clock. In case of low-frequency , the image-flicker may occur.

The information contained herein is the exclusive property of Prime View International Co., Ltd. and shall not be distributed, reproduced, or disclosed in whole or in part without prior written permission of Prime View International Co., Ltd.

7-5) Display Time Range

(1) Vertical Timing :

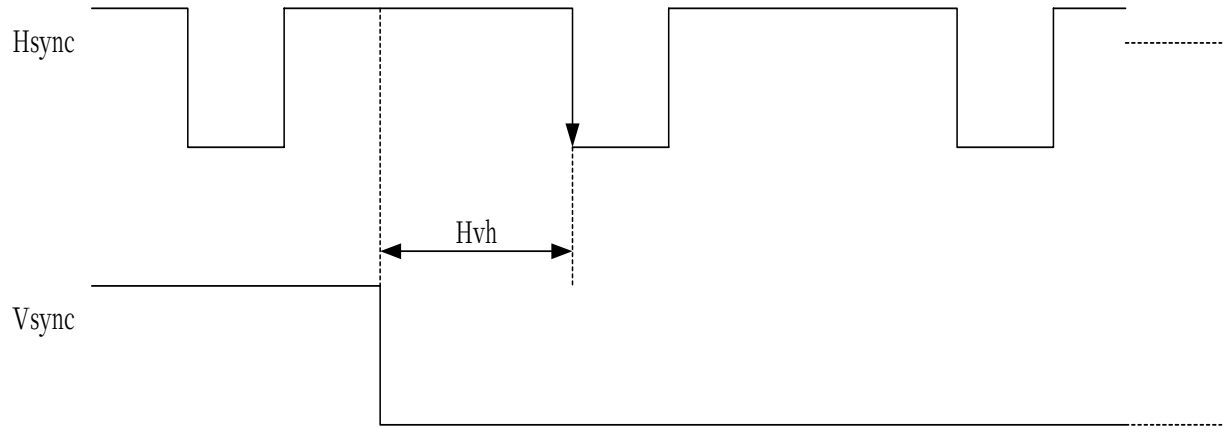

(2) Horizontal Timing :

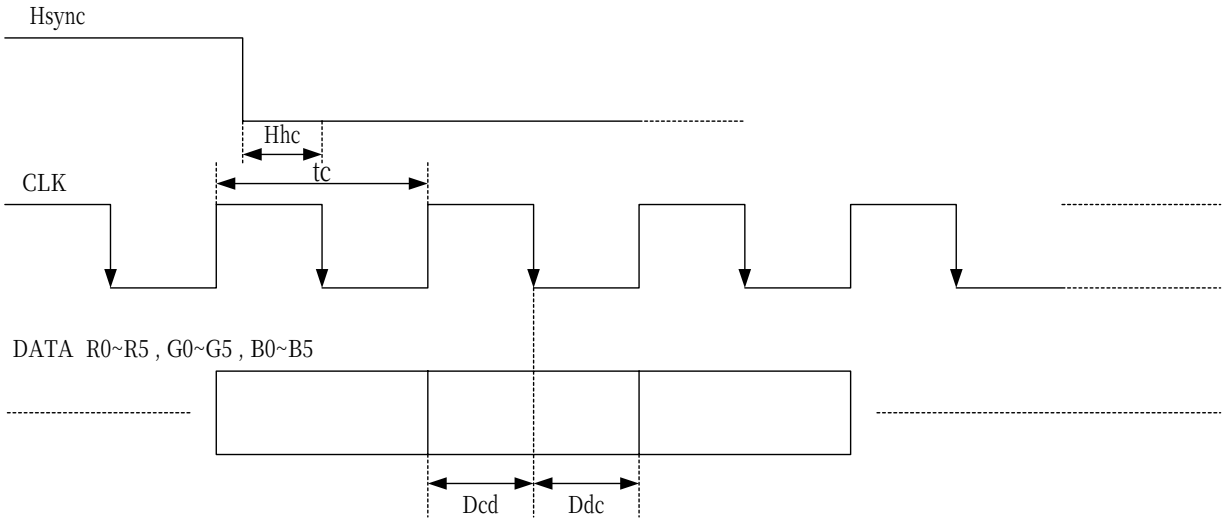

(3) DENB Timing :

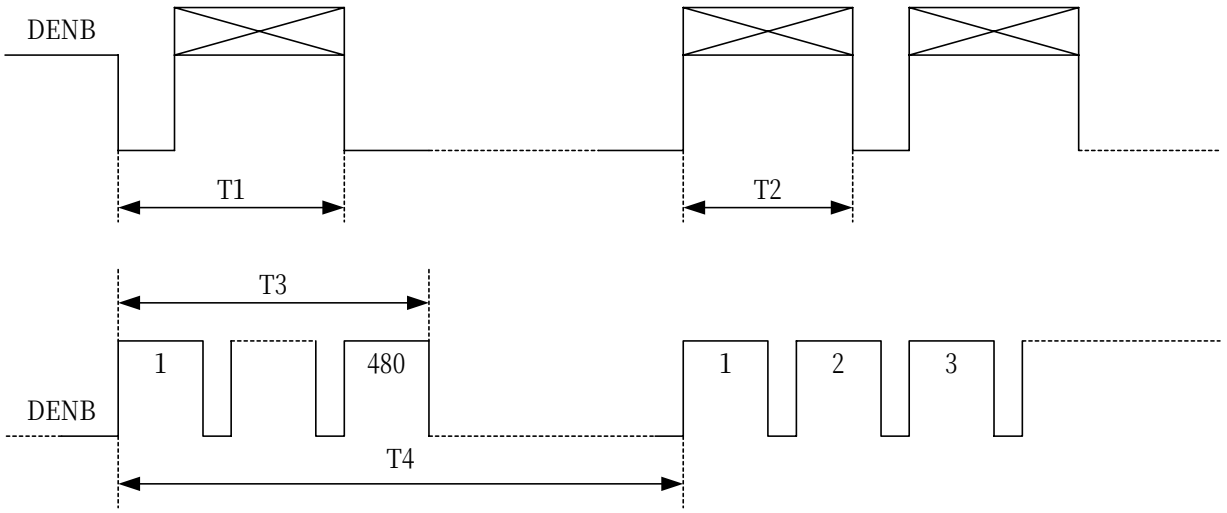

The information contained herein is the exclusive property of Prime View International Co., Ltd. and shall not be distributed, reproduced, or disclosed in whole or in part without prior written permission of Prime View International Co., Ltd.

(4) Detail of Horizontal Timing :

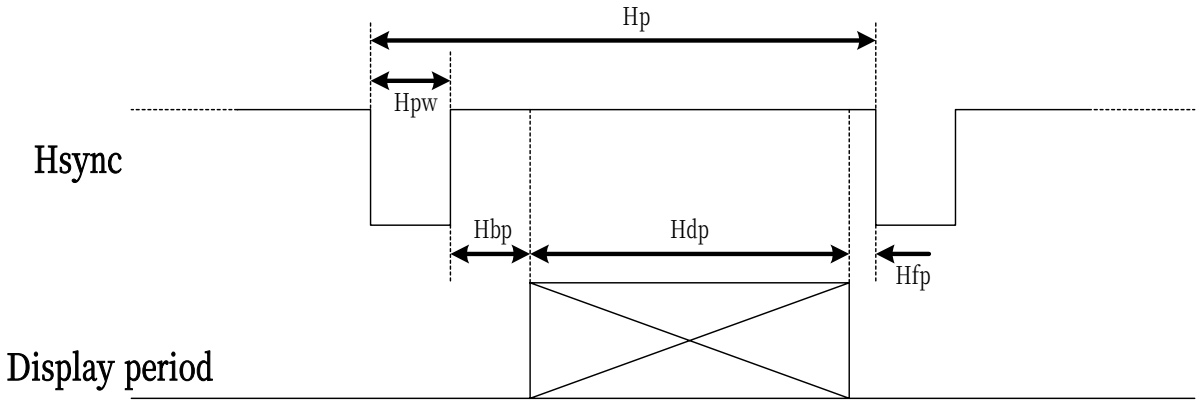

(a) VGA-480 Mode (Hsync = Positive / Negative Polarization)

Item	Description	Clock Cycles	Time
A	Horizontal Width	96	3.813 μs
B	Horizontal B-Porch	48	1.907 μs
C	Horizontal Display	640	25.422 μs
D	Horizontal F-Porch	16	0.636 μs
E	Horizontal Total	800	31.778 μs

(b) VGA-400 Mode (Hsync = Negative Polarization)

Item	Description	Clock Cycles	Time
A	Horizontal Width	96	3.813 μs
B	Horizontal B-Porch	48	1.907 μs
C	Horizontal Display	640	25.422 μs
D	Horizontal F-Porch	16	0.636 μs
E	Horizontal Total	800	31.778 μs

(c) VGA-350 Mode (Hsync = Positive Polarization)

Item	Description	Clock Cycles	Time
A	Horizontal Width	96	3.813 μs
B	Horizontal B-Porch	48	1.907 μs
C	Horizontal Display	640	25.422 μs
D	Horizontal F-Porch	16	0.636 μs
E	Horizontal Total	800	31.778 μs

The information contained herein is the exclusive property of Prime View International Co., Ltd. and shall not be distributed, reproduced, or disclosed in whole or in part without prior written permission of Prime View International Co., Ltd.

(5) Detail of Vertical Timing :

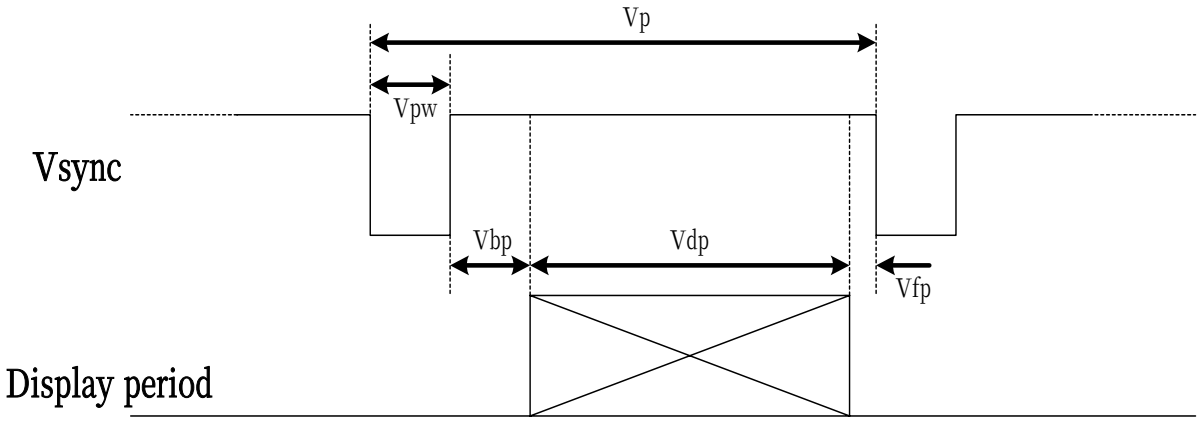

.

(a) VGA-480 Mode (Vsync = Positive / Negative Polarization)

Item	Description	Horizontal Lines	Time
A	Vertical Width	2	63.5 μs
B	Vertical B-Porch	33	1.049 ms
C	Vertical Display	480	15.253 ms
D	Vertical F-Porch	10	317.8 μs
E	Vertical Total	525	16.683 ms

(b) VGA-400 Mode (Vsync = Positive Polarization)

Item	Description	Horizontal Lines	Time
A	Vertical Width	2	63.5 μs
B	Vertical B-Porch	35	1.112 ms
C	Vertical Display	400	12.711 ms
D	Vertical F-Porch	12	381.0 μs
E	Vertical Total	449	14.268 ms

(c) VGA-350 Mode (Vsync = Negative Polarization)

Item	Description	Horizontal Lines	Time
A	Vertical Width	2	63.5 μs
B	Vertical B-Porch	60	1.907 ms
C	Vertical Display	350	11.122 ms
D	Vertical F-Porch	37	1.176 μs
E	Vertical Total	449	14.268 ms

The information contained herein is the exclusive property of Prime View International Co., Ltd. and shall not be distributed, reproduced, or disclosed in whole or in part without prior written permission of Prime View International Co., Ltd.

7-6) Vertical Display Position

Mode	Hsync	Vsync	V-Start Position	V-Display	Remark
VGA-480	Positive / Negative	Positive / Negative	34	480 lines	
VGA-400	Negative	Positive	17	400 lines	Note 7-7
VGA-350	Positive	Negative	30	350 lines	Note 7-8

Note 7-7 :As the format is VGA-400 (Hsync = Negative , Vsync = Positive) , LCD module will adjust the display area to the center of display . At this time , both of the upper and lower display areas have 40 blanking lines (the display color is black) . The actual display area is center 400 lines .

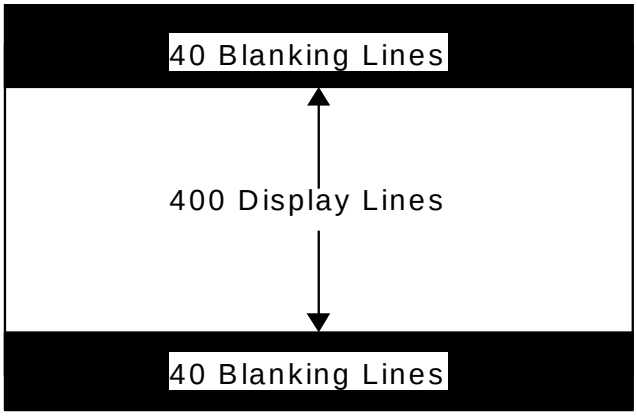

Note 7-8 : As the format is VGA-350 (Hsync = Positive, Vsync = Negative) , LCD module will adjust the display area to the center of display . At this time , both of the upper and lower display areas have 65 blanking lines (the display color is black) . The actual display area is center 350 lines .

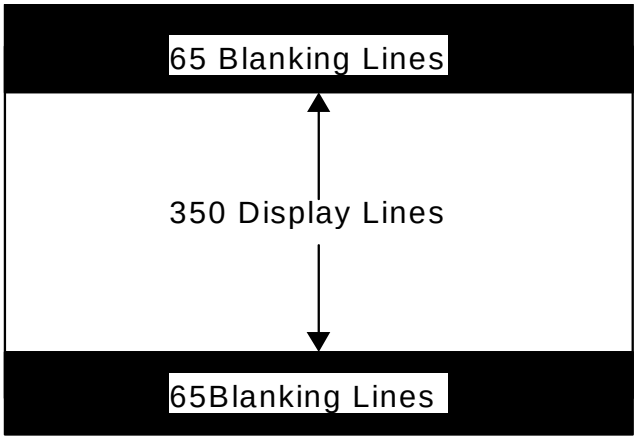

The information contained herein is the exclusive property of Prime View International Co., Ltd. and shall not be distributed, reproduced, or disclosed in whole or in part without prior written permission of Prime View International Co., Ltd.

7-7) Display Color and Gray Scale Reference

Color		Input Color Data																	
		Red						Green						Blue					
		R5	R4	R3	R2	R1	R0	G5	G4	G3	G2	G1	G0	B5	B4	B3	B2	B1	B0
Basic Colors	Black	0	0	0	0	0	0	0	0	0	0	0	0	0	0	0	0	0	0
	Red (63)	1	1	1	1	1	1	0	0	0	0	0	0	0	0	0	0	0	0
	Green (63)	0	0	0	0	0	0	1	1	1	1	1	1	0	0	0	0	0	0
	Blue (63)	0	0	0	0	0	0	0	0	0	0	0	0	1	1	1	1	1	1
	Cyan	0	0	0	0	0	0	1	1	1	1	1	1	1	1	1	1	1	1
	Magenta	1	1	1	1	1	1	0	0	0	0	0	0	1	1	1	1	1	1
	Yellow	1	1	1	1	1	1	1	1	1	1	1	1	0	0	0	0	0	0
	White	1	1	1	1	1	1	1	1	1	1	1	1	1	1	1	1	1	1
Red	Red (00)	0	0	0	0	0	0	0	0	0	0	0	0	0	0	0	0	0	0
	Red (01)	0	0	0	0	0	1	0	0	0	0	0	0	0	0	0	0	0	0
	Red (02)	0	0	0	0	1	0	0	0	0	0	0	0	0	0	0	0	0	0
	Darker																		
	↓	↓	↓	↓	↓	↓	↓	↓	↓	↓	↓	↓	↓	↓	↓	↓	↓	↓	↓
	Brighter																		
	Red (61)	1	1	1	1	0	1	0	0	0	0	0	0	0	0	0	0	0	0
	Red (62)	1	1	1	1	1	0	0	0	0	0	0	0	0	0	0	0	0	0
	Red (63)	1	1	1	1	1	1	0	0	0	0	0	0	0	0	0	0	0	0
Green	Green (00)	0	0	0	0	0	0	0	0	0	0	0	0	0	0	0	0	0	0
	Green (01)	0	0	0	0	0	0	0	0	0	0	0	1	0	0	0	0	0	0
	Green (02)	0	0	0	0	0	0	0	0	0	0	1	0	0	0	0	0	0	0
	Darker																		
	↓	↓	↓	↓	↓	↓	↓	↓	↓	↓	↓	↓	↓	↓	↓	↓	↓	↓	↓
	Brighter																		
	Green (61)	0	0	0	0	0	0	1	1	1	1	0	1	0	0	0	0	0	0
	Green (62)	0	0	0	0	0	0	1	1	1	1	1	0	0	0	0	0	0	0
	Green (63)	0	0	0	0	0	0	1	1	1	1	1	1	0	0	0	0	0	0
Blue	Blue (00)	0	0	0	0	0	0	0	0	0	0	0	0	0	0	0	0	0	0
	Blue (01)	0	0	0	0	0	0	0	0	0	0	0	0	0	0	0	0	0	1
	Blue (02)	0	0	0	0	0	0	0	0	0	0	0	0	0	0	0	0	1	0
	Darker																		
	↓	↓	↓	↓	↓	↓	↓	↓	↓	↓	↓	↓	↓	↓	↓	↓	↓	↓	↓
	Brighter																		
	Blue (61)	0	0	0	0	0	0	0	0	0	0	0	0	1	1	1	1	0	1
	Blue (62)	0	0	0	0	0	0	0	0	0	0	0	0	1	1	1	1	1	0
	Blue (63)	0	0	0	0	0	0	0	0	0	0	0	0	1	1	1	1	1	1

The information contained herein is the exclusive property of Prime View International Co., Ltd. and shall not be distributed, reproduced, or disclosed in whole or in part without prior written permission of Prime View International Co., Ltd.

7-8) Control Board Dip Switch Format

SW1(8 Pins)

Item	Symbol	Condition	Remark
SW 1-1	-	No connection	Default (OFF)
SW 1-2	HP3	Horizontal Shift (8 Line)	Default (ON)
SW 1-3	HP2	Horizontal Shift (4 Line)	Default (OFF)
SW 1-4	HP1	Horizontal Shift (2 Line)	Default (OFF)
SW 1-5	HP0	Horizontal Shift (1 Line)	Default (ON)
SW 1-6	VP2	Vertical Shift (4 Line)	Default (OFF)
SW 1-7	VP1	Vertical Shift (2 Line)	Default (ON)
SW 1-8	VP0	Vertical Shift (1Line)	Default (ON)

1. The default state is base on SYNC. mode (VGA-480)
2. Total horizontal shift line are 15 lines (HP0~HP3 on)
   Total vertical shift line are 7 lines (VP0~VP2 on)

SW2 (2 Pins)

Item	Symbol	Condition	Remark
SW 2-1	UD	Vertical Image Shift-direction Select	Default (ON)
SW 2-2	RL	Horizontal Image Shift-direction Select	Default (ON)

8. Power On Sequence

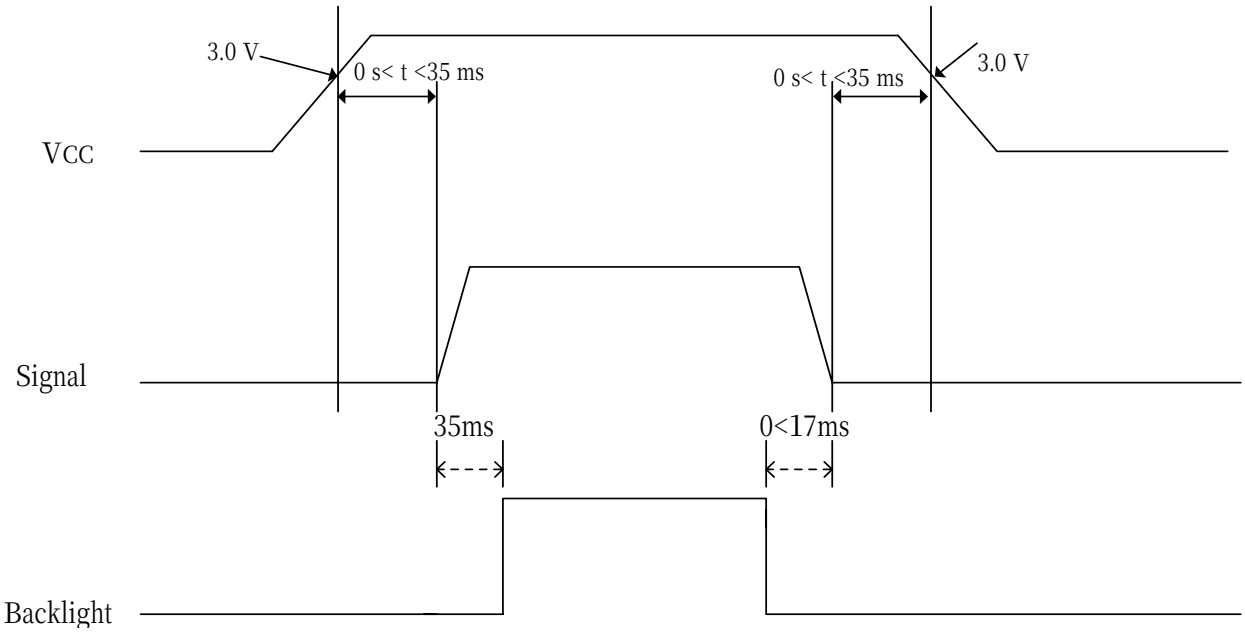

1. The supply voltage for input signals should be same as $V_{CC.}$
2. When the power is off , please keep whole signals (Hsync, Vsync, CLK, Data) low level or high impedance

The information contained herein is the exclusive property of Prime View International Co., Ltd. and shall not be distributed, reproduced, or disclosed in whole or in part without prior written permission of Prime View International Co., Ltd.

9. Optical Characteristic

9-1) Specification:

Ta=25℃

Parameter		Symbol	Condition	MIN.	TYP.	MAX.	Unit	Remarks
Viewing Angle	Horizontal	θ21, θ22	CR＞10	55	60	-	deg	Note 9-1
	Vertical	θ12		35	40	-	deg	
		θ11		50	55	-	deg	
Contrast Ratio		CR	At optimized Viewing angle	200	400	-	-	Note 9-2
Response time	Rise	Tr	θ=0°	-	15	30	ms	Note 9-4
	Fall	Tf		-	25	50	ms	
Brightness		L	θ=0°	350	400	-	cd/㎡	Note 9-3
Uniformity		U		75	80	-	%	Note 9-5
Cross Talk		-	θ=0°	-	-	3.5	%	Note 9-6
White Chromaticity		x	θ=0°	0.264	0.294	0.324	-	Note 9-3
		y		0.276	0.308	0.338	-	
Lamp Life Time		-	+25℃	50,000	-	-	hr	

Note 9-1 : The definitions of viewing angle diagrams :

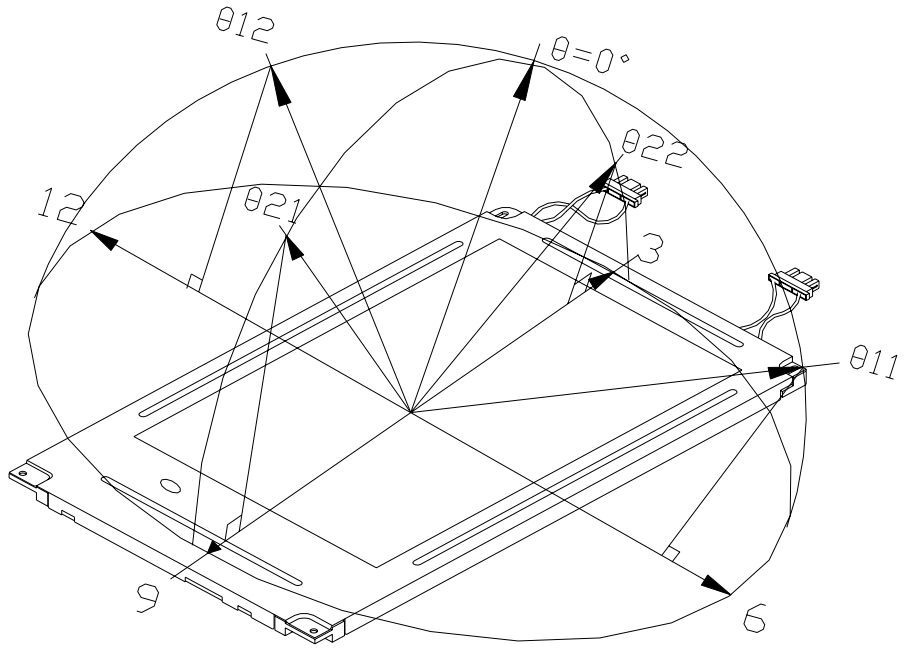

Note 9-2 : CR = $\frac{\text{Luminance when LCD is White}}{\text{Luminance when LCD is Black}}$

Contrast Ratio is measured in optimum common electrode voltage.

Note 9-3 : 1.Topcon BM-7 (fast) luminance meter 1°field of view is used in the testing (after 20~30 minutes operation).

2.Lamp current : 6 mA

3.Inverter model : TDK-347.

The information contained herein is the exclusive property of Prime View International Co., Ltd. and shall not be distributed, reproduced, or disclosed in whole or in part without prior written permission of Prime View International Co., Ltd.

Note 9-4 : The definitions of response time

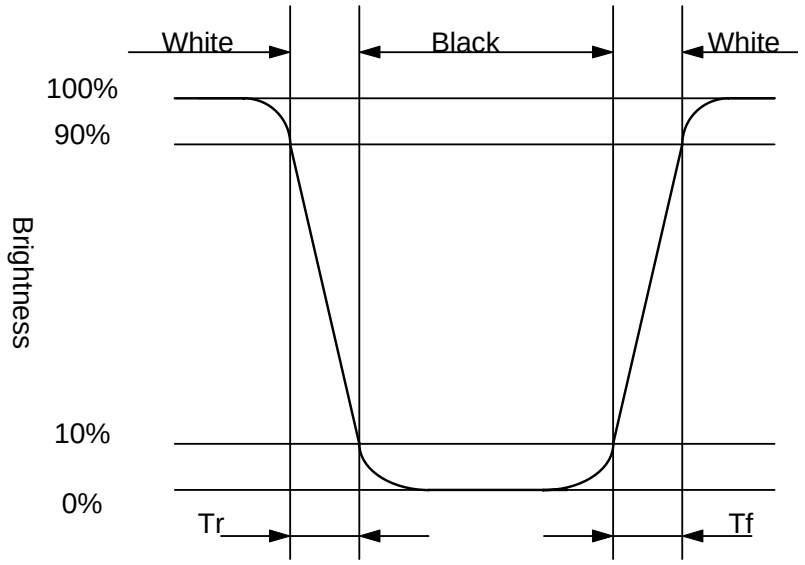

Note 9-5 : The uniformity of LCD is defined as

$$U = \frac{\text{The Minimum Brightness of the 9 testing Points}}{\text{The Maximum Brightness of the 9 testing Points}}$$

Luminance meter : BM-5A or BM-7 fast (TOPCON)
Measurement distance : 500 mm +/- 50 mm
Ambient illumination : < 1 Lux
Measuring direction : Perpendicular to the surface of module

The test pattern is white (Gray Level 63).

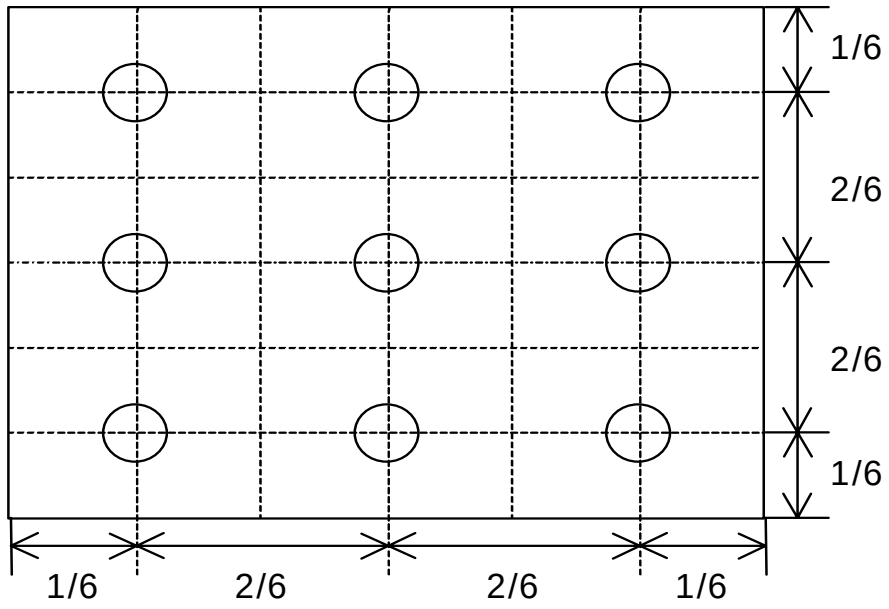

The information contained herein is the exclusive property of Prime View International Co., Ltd. and shall not be distributed, reproduced, or disclosed in whole or in part without prior written permission of Prime View International Co., Ltd.

Note 9-6 : Cross Talk (CTK) = $\frac{|YA-YB|}{YA} \times 100\%$

YA : Brightness of Pattern A

YB : Brightness of Pattern B

Pattern A

(Gray Level 46)

Pattern B

(Gray Level 46, central black box exclusive)

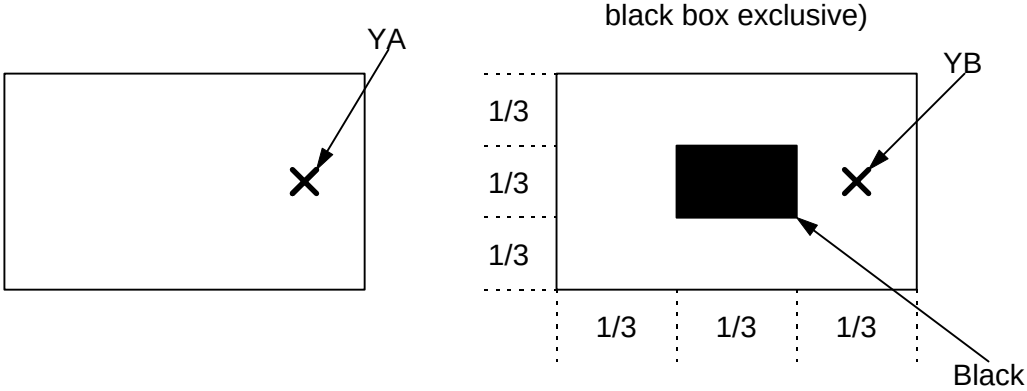

✕: Testing Point (A and B are at the same point.)

(Gray Level 0)

The information contained herein is the exclusive property of Prime View International Co., Ltd. and shall not be distributed, reproduced, or disclosed in whole or in part without prior written permission of Prime View International Co., Ltd.

10. Handling Cautions

10-1) Mounting of module

a) Please power off the module when you connect the input/output connector.

b) Please connect the ground pattern of the inverter circuit surely. If the connection is not perfect, some following problems may happen possibly.

1.The noise from the backlight unit will increase.

2.The output from inverter circuit will be unstable.

3.In some cases a part of module will heat.

c) Polarizer which is made of soft material and susceptible to flaw must be handled carefully.

d) Protective film (Laminator) is applied on surface to protect it against scratches and dirt. It is recommended to peel off the laminator before use and taking care of static electricity.

10-2) Precautions in mounting

a) When metal part of the TFT-LCD module (shielding lid and rear case) is soiled, wipe it with soft dry cloth.

b) Wipe off water drops or finger grease immediately. Long contact with water may cause discoloration or spots.

c) TFT-LCD module uses glass, which breaks or cracks easily if dropped or bumped on hard surface. Please handle with care.

d) Since CMOS LSI is used in the module. So take care of static electricity and earth yourself when handling.

10-3) Adjusting module

a) Adjusting volumes on the rear face of the module have been set optimally before shipment.

b) Therefore, do not change any adjusted values. If adjusted values are changed, the specifications described may not be satisfied.

10-4) Others

a) Do not expose the module to direct sunlight or intensive ultraviolet rays for many hours.

b) Store the module at a room temperature place.

c) The voltage of beginning electric discharge may over the normal voltage because of leakage current from approach conductor by to draw lump read lead line around.

d) If LCD panel breaks, it is possibly that the liquid crystal escapes from the panel.
Avoid putting it into eyes or mouth. When liquid crystal sticks on hands, clothes or feet. Wash it out immediately with soap.

e) Observe all other precautionary requirements in handling general electronic components.

f) Please adjust the voltage of common electrode as material of attachment by 1 module.

The information contained herein is the exclusive property of Prime View International Co., Ltd. and shall not be distributed, reproduced, or disclosed in whole or in part without prior written permission of Prime View International Co., Ltd.

11. Reliability Test

No	Test Item	Test Condition
1	High Temperature Storage Test	Ta = +80 ℃, 240 hrs
2	Low Temperature Storage Test	Ta = -30 ℃, 240 hrs
3	High Temperature Operation Test	Ta = +70 ℃, 240 hrs
4	Low Temperature Operation Test	Ta = -20 ℃, 240 hrs
5	High Temperature & High Humidity Operation Test	Ta = +60 ℃, 90%RH, 240 hrs
6	Thermal Cycling Test (non-operating)	-25℃ → +70℃, 200 Cycles 30 min 30 min
7	Shock Test (non-operating)	Gravity :490m/s Direction: ±X, ±Y, ±Z Pulse Width :11ms,half sine wave
8	Vibration Test (non-operating)	Frequency：10 ~ 57 H_Z /Vibration Width :0.075mm 58-500 H/ / Gravity :9.8m/s Sweep time: 11 minutes Test period: 3 hrs for each direction of X, Y, Z
9	Electrostatic Discharge Test (non-operating)	150pF, 330Ω Air : ±15KV ; Contact : ±8KV 10 times/point , 9 points/panel face

Ta: ambient temperature

Note : The protective film must be removed before temperature test.

[Criteria]

In the standard conditions, there is not display function NG issue occurred. (Including: line defect, no image). All the cosmetic specification is judged before the reliability stress.

The information contained herein is the exclusive property of Prime View International Co., Ltd. and shall not be distributed, reproduced, or disclosed in whole or in part without prior written permission of Prime View International Co., Ltd.

12. Block Diagram

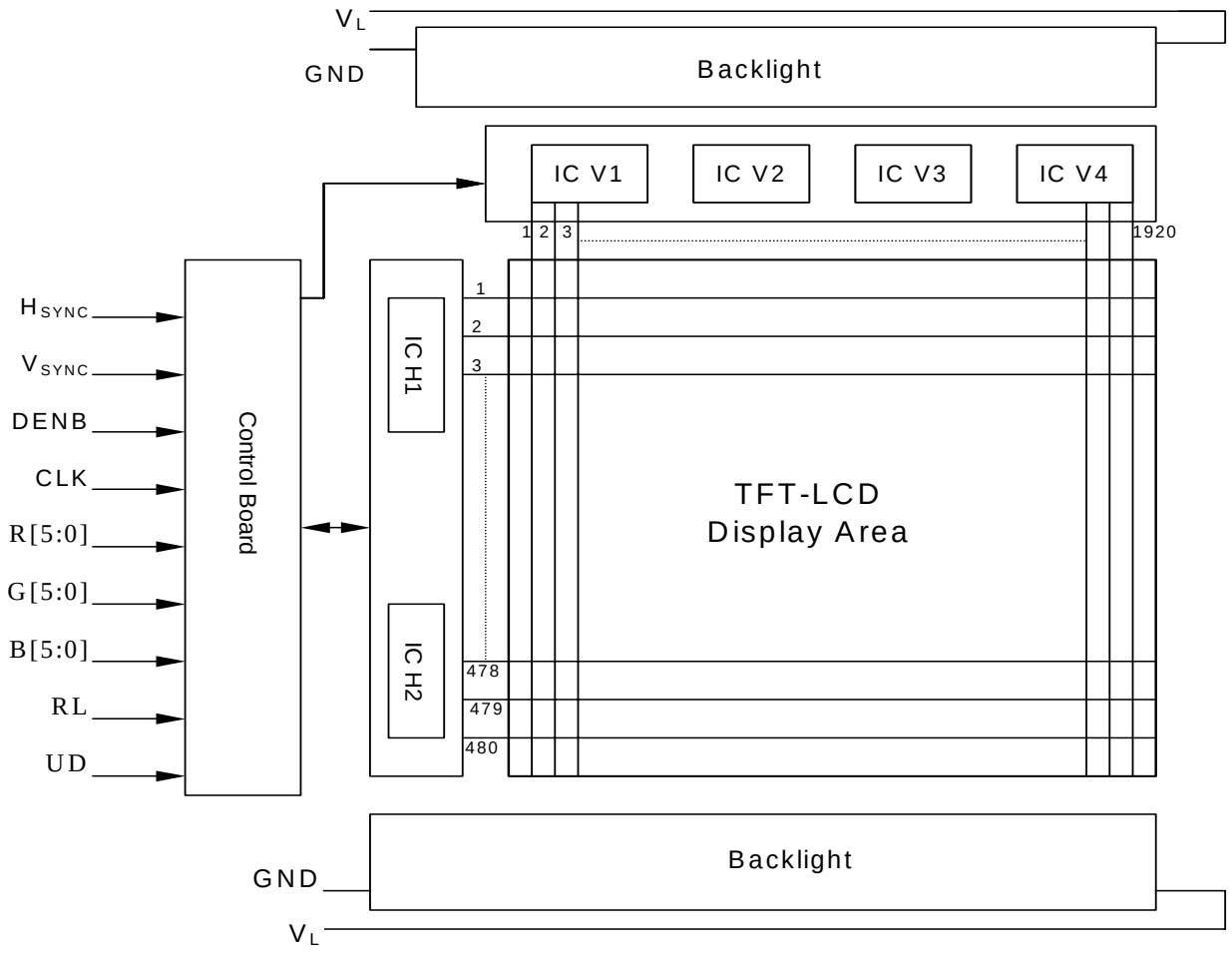

The information contained herein is the exclusive property of Prime View International Co., Ltd. and shall not be distributed, reproduced, or disclosed in whole or in part without prior written permission of Prime View International Co., Ltd.

13. Packing

ZONE	REV.	DOCUUMENT NO.	DESCRIPTION	DATE	REV.BY

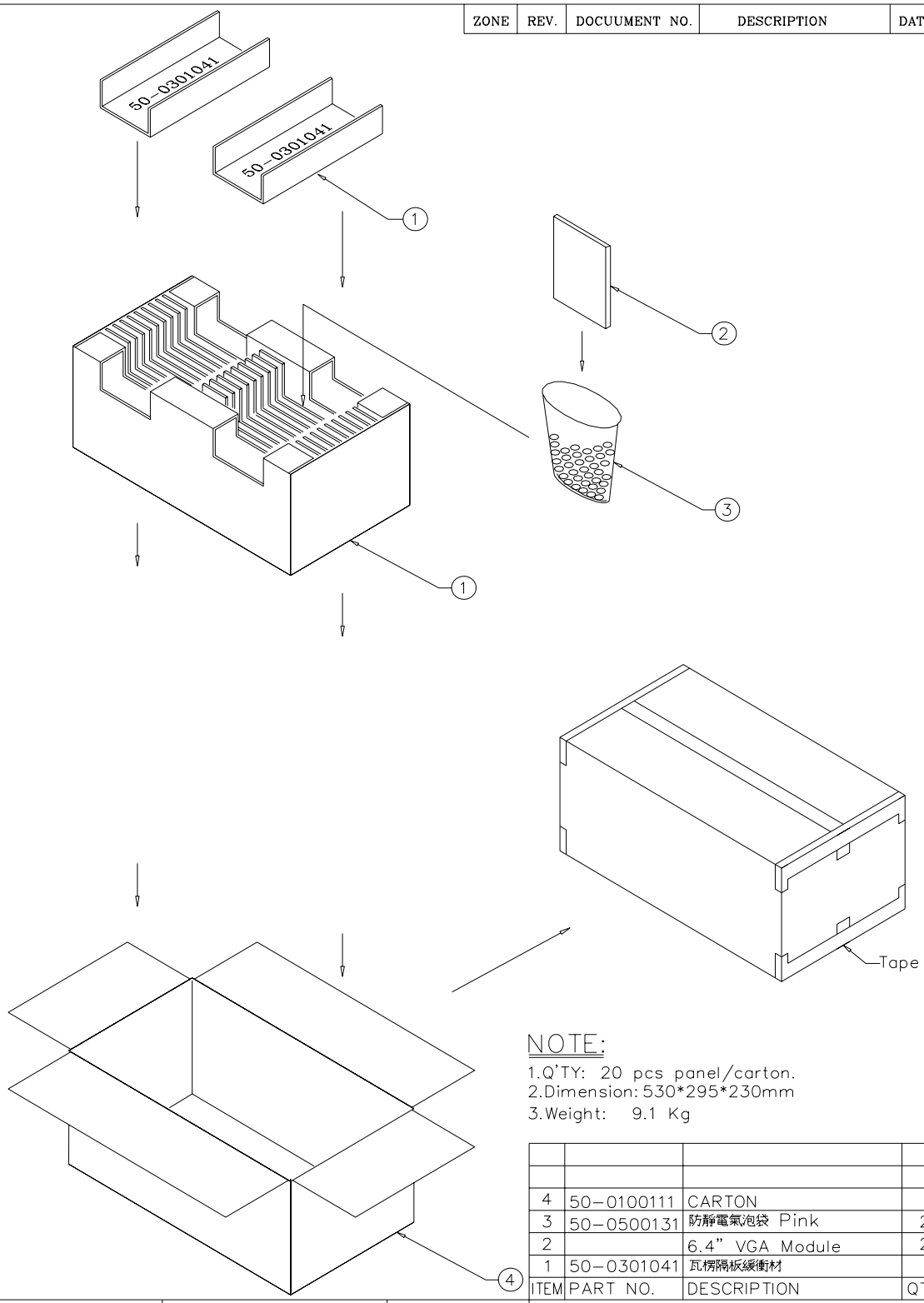

NOTE:

1.Q'TY: 20 pcs panel/carton.
2.Dimension: 530*295*230mm
3.Weight: 9.1 Kg

ITEM	PART NO.	DESCRIPTION	QTY	REMARK
4	50-0100111	CARTON	1	
3	50-0500131	防靜電氣泡袋 Pink	20	抗靜電
2		6.4" VGA Module	20	加下鐵蓋
1	50-0301041	瓦楞隔板緩衝材	1	上蓋+ 底座

MTL.SPEC.	UNSPECIFIED TOL'S ANGLE ROUGHNESS	REMARK	元太科技工業股份有限公司 Prime View International Co., Ltd.

APPROVE	Franks	'04.10.12	SCALE	UNIT	SHEET 1 OF 1	DWG.TITLE 6.4"VGA Module Packing Draw
CHECK	Franks	'04.10.12				
DRAWN	Jimmy	'04.10.12	MTL.NO.		DWG FILE:	REV. 01 / A4 SIZE

The information contained herein is the exclusive property of Prime View International Co., Ltd. and shall not be distributed, reproduced, or disclosed in whole or in part without prior written permission of Prime View International Co., Ltd.