MATERIAL SPECIFICATIONS:
Body & Housing: PA, UL-94V-HB / UL-94V-0 rated, color white
Contacts: Bronze, Gold plated

MECHANICAL SPECIFICATIONS:
Contacts: 8
Durability: >5000 mating cycles.
Cable Diameter: 2.5 - 8mm
Wire gauge: 24AWG max.

ELECTRICAL SPECIFICATIONS:
Rated current:: 2A per contact
Rated voltage: 175V
Contact resistance: ≤15 mohms
Rated impulse voltage: 1750V

IEC/UL 61010-1 SPECIFICATIONS:
Material group: I, II
Overload category: II
Pollution degree: 2

ENVIRONMENTAL SPECIFICATIONS:
Degree of Protection: IP67 unmated and mated
Operating Temperature: -25°C ~ +85°C

RoHS COMPLIANT

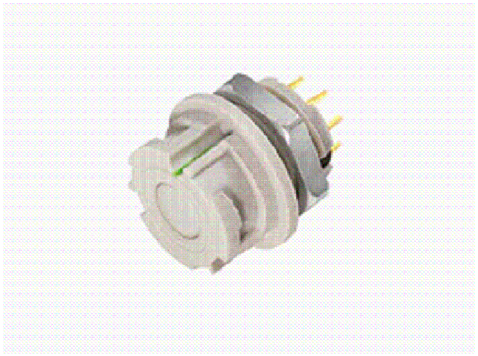

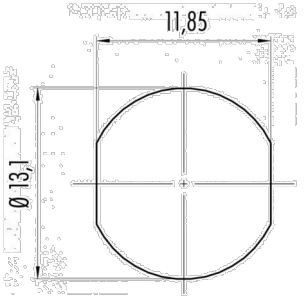

PANEL CUTOUT

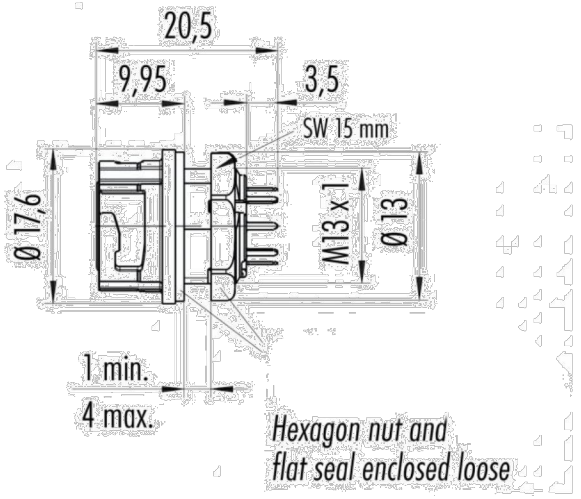

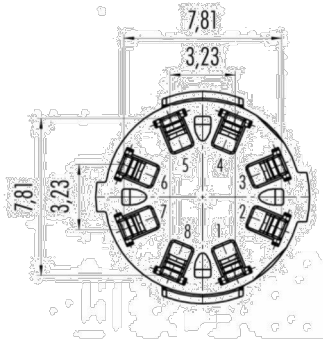

	X	Y
1	1,62	-3,90
2	3,90	-1,62
3	3,90	1,62
4	1,62	3,90
5	-1,62	3,90
6	-3,90	1,62
7	-3,90	-1,62
8	-1,62	-3,90

REVISIONS

REV	DATE	CHANGE	CHNG	CHCK	APPR

TOLERANCE
UNLESS OTHERWISE SPECIFIED
X ± 1
X.X ± 0.4
X.XX ± 0.13

DRAWN BY	PB	DATE:	7/26/16
CHECK BY		DATE:	
APPR BY		DATE:	

Power Dynamics, Inc.
Phone: 973 560-0019 Whippany, New Jersey Fax: 973 560-0076

PART: HARSH ENVIRONMENT CONNECTOR; SERIES 2
FEMALE PANEL MOUNT; PCB PINS; WHITE

PART #: PD-HEC2-FPC-P-W

SHEET 1 of 1

SIZE: A

SCALE: NTS

ALL DIMENSIONS FOR REFERENCE ONLY
DIMENSIONS ARE IN MILLIMETERS

REV: