MATERIAL AND FINISH:
Insulator: Nylon 66, black, UL-94V-0 rated
Contacts: Brass, Tin plated

ELECTRICAL SPECIFICATIONS:
Current rating: 10 A
Voltage rating: 250 VAC
Current rating: 15 A
Voltage rating: 250 VAC
Insulation resistance: 100 Mohm min. at 500 VDC
Dielectric withstanding voltage: 2000 VAC for one minute

MECHANICAL SPECIFICATION:
Contact pull out force: 10N ~ 50N

ENVIRONMENTAL:
Operating temperature: -25°C ~ +85°C

RoHS COMPLIANT

ORDERING CODE:
PD-43R03-__ 1
1

1) TERMINAL OPTIONS
1 = .187(4.8)
2 = .250(6.3)

NOTES:
Recommended panel thickness
0.8mm min. to 3.0mm max.

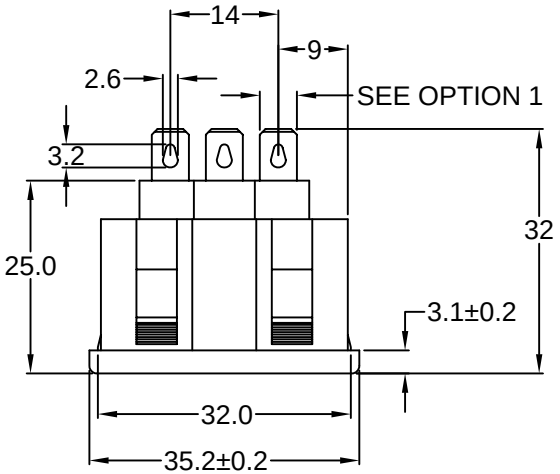

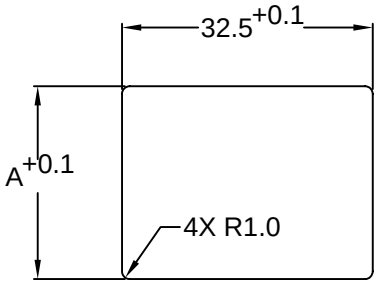

RECOMMENDED PANEL CUTOUT

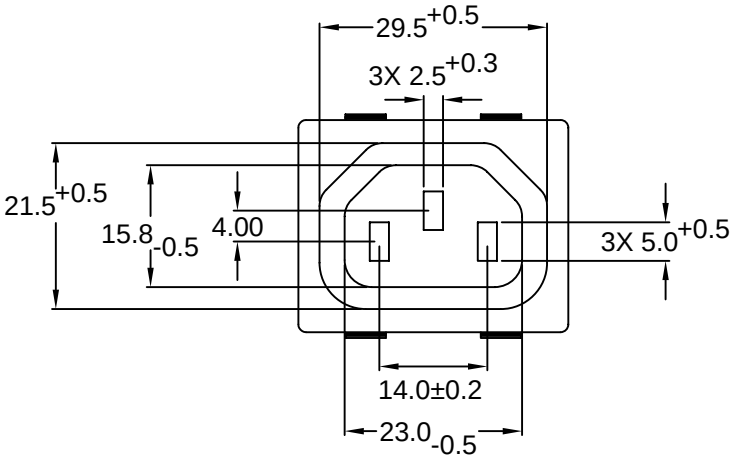

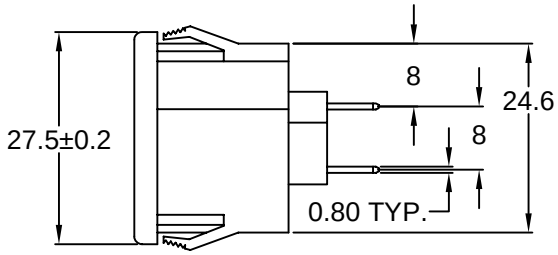

REVISIONS					
REV	DATE	CHANGE	CHNG	CHCK	APPR
A	1/27/03	REMOVED RIBS	PB	TD	PB
B	6/10/03	ADD OPERATING T°	TD	PB	PB
C	5/5/04	ADD MEC. SPEC	TD	PB	PB
D	11/8/04	ADD T. HOLE & OAL DIM	TD	PB	PB
E	11/24/04	ADD 14.0, 9.0, 8.3, 8.2 DIM	TD	PB	PB
F	12/2/04	CHG REF DIM TO DIM	TD	PB	PB
G	6/18/08	HOUSING WAS UL-94V-1	PB		

PANEL THICKNESS	A
0.8 - 1.0	25.4
1.0 - 1.2	25.5
1.2 - 1.5	25.6
2.0	25.7
3.0	25.7

TOLERANCE
UNLESS OTHERWISE SPECIFIED
X ± 1
X.X ± 0.4
X.XX ± 0.20

DRAWN BY	GQ	DATE:	10/23/01
CHECK BY	TD	DATE:	10/25/01
APPR BY	PB	DATE:	10/25/01

Power Dynamics, Inc.
Phone: 973 560-0019 Whippany, New Jersey Fax: 973 560-0076

PART: UNIVERSAL IEC 60320 C13 APPL. OUTLET; QC TERMINALS, SNAP-IN

PART #: PD-43R03-X1

SHEET 1 of 1

SIZE: A

SCALE: NTS

ALL DIMENSIONS FOR REFERENCE ONLY
DIMENSIONS ARE IN MILLIMETERS

REV: G