InGaAs PIN PHOTODIODES PD-1181

0.5 mm InGaAs PIN Photdiode with TO-46 Package

FEATURES

- ✧ High responsivity for dual windows at 1310 nm and 1550 nm
- ✧ Low dark current
- ✧ Hermetically sealed 3-pin TO-46 metal case
- ✧ Active diameter 0.5 mm

DESCRIPTION

PD-1181 InGaAs Photodiode is suited to receive the light at the wavelength range from 800 nm to 1650 nm. With high reliability, PD-1181 series are the best choice for power monitor application.

ELECTRICAL AND OPTICAL CHARACTERISTICS (T_C=25°C)

Symbol	Parameter	Test Conditions	Min.	Typ.	Max.	Unit
	Active Diameter			0.5		mm
	Detection Range		800		1650	nm
R	Responsivity	V_R=5V, λ=1300nm	0.85		-	A/W
		V_R=5V, λ=1550nm	0.9	-		
I_{dark}	Dark Current	V_R=5V		1	3	nA
C	Capacitance	V_R=5V		30	50	pF
R_{shunt}	Shunt Resistance		10			MΩ
BW	Bandwidth	V_R=5V	50			MHz

ABSOLUTE MAXIMUM RATINGS (T_C=25 °C)

Symbol	Parameter	Ratings	Unit
Po	Input Optical Power	10	mW
V_{RD}	Reverse Voltage	15	V
I_{FD}	Forward Current	10	mA
T_{opr}	Operating Temperature	-40~+85	°C
T_{stg}	Storage Temperature	-40~+85	°C

OPTOWAY TECHNOLOGY INC. No.38, Kuang Fu S. Road, Hu Kou, Hsin Chu Industrial Park, Hsin Chu, Taiwan 303
Tel: 886-3-5979798 Fax: 886-3-5979737
E-mail: sales@optoway.com.tw http: // www.optoway.com.tw

MECHANICAL DIMENSION (mm) and PIN ASSIGNMENT

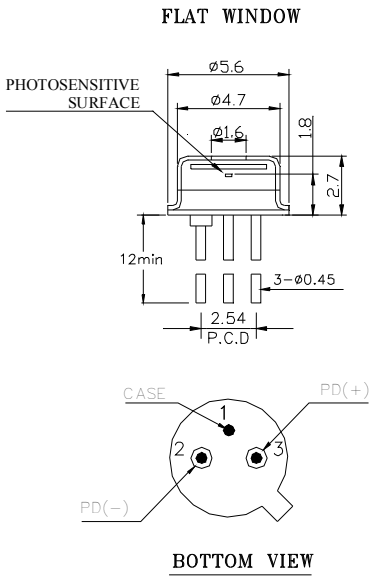

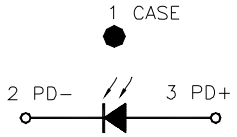

Note: 1. Specifications subject to change without notice.

2. Other PIN assignment is available upon request.

ORDER INFORMATION

Part No.: P D – 1 1 8 1

Revision History

Version	Subject	Release Date
1.0	Initial datasheet	2004/4/1
1.1	Add the indication of photosensitive surface	2009/4/9