PART NO.	DESCRIPTION	"A" (BOARD WIDTH)	"B"	"C"	"D"	"E" ±1/16 (±1.6)	"F" ±1/16 (±1.6)	"G" ±1/16 (±1.6)	"L"
PCTE-100-1-04S	WITH SLOTS, NO TAPE	3.94 (100)	4.10 (104)	.67 (17)	.43 (10.9)	.79 (20.0)	1.77 (45.0)	.20 (5.0)	6.3 REF (160 REF)
PCTE-100-1-04T	WITH TAPE, NO SLOTS								
PCT-3000-04S	WITH SLOTS, NO TAPE	3.00 (76.2)	3.14 (79.8)	.70 (17.8)	.43 (10.9)	3/4 (19.1)	2.00 (50.8)	3/16 (4.8)	48.0±1/4 (1219±6.4)
PCT-3000-04T	WITH TAPE, NO SLOTS								

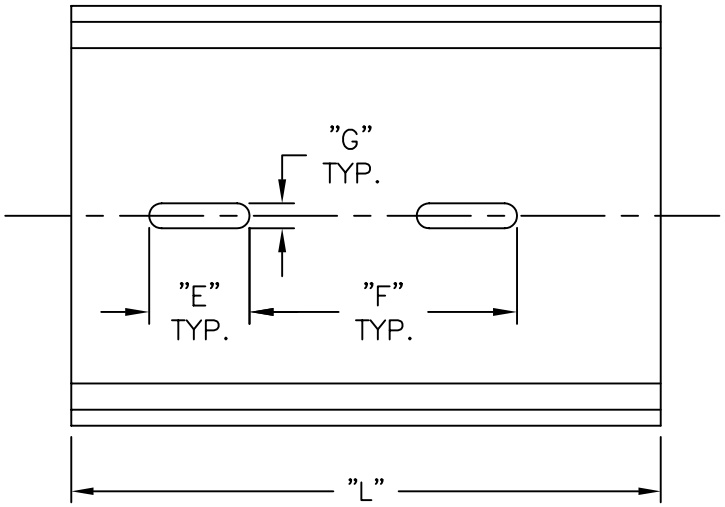

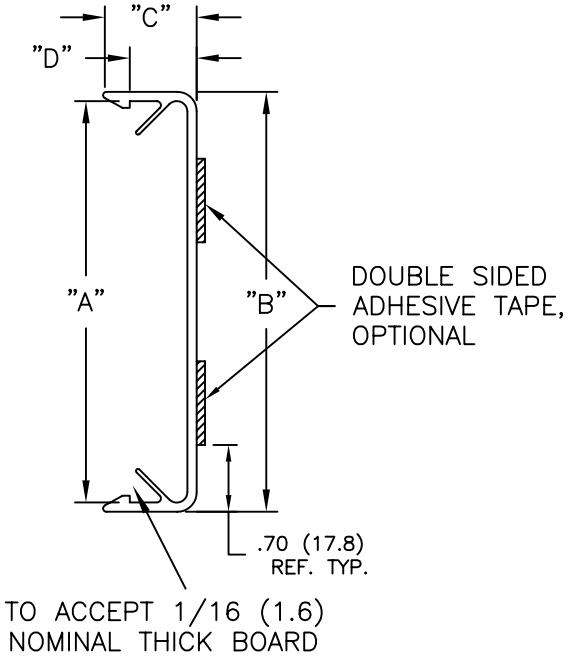

NOTES:
1. MATERIAL: RIGID PVC.
2. COLOR: GRAY.
3. ACRYLIC ADHESIVE TAPE (RMS-15), 1/16 (1.6) THICK, 5/8 (15.9) WIDE, 2 STRIPS AS INDICATED
4. PCTE TYPES DESIGNED FOR EUROCARD SIZE PRINTED CIRCUIT BOARD (160 X 100 mm)
5. PCT SUPPLIED IN 4' ±1/4" LENGTH; CUSTOM CUT LENGTH AVAILABLE BY SPECIAL ORDER

REV	DESCRIPTION	ENGR DATE
C	UPDATED NOTES AND CHANGED FILE NO.	SM 08.21.02
B	CORRECTED TOLERANCE VALUES	MO 3/13/98
A	"E", "F" AND "G" ADDED	JP 1.21.97

TITLE: PRINTED CIRCUIT BOARD TRACK

DWG IN IN (MM)

TOLERANCES UNLESS NOTED
.XX=±.020
.XXX=±.015
FRAC=±1/32
ANG=±1°

FILE # PCT(E) | DWN: P.B. | APP:

MAT'L: SEE NOTES | DT: 03-01-94 | DT:

RE: RICHCO, INC.

RICHCO INC.
PO BOX 804238,CHICAGO,60680
(773) 539-4060

FINAL

PART # SEE TABLE

PRINT TYPE CA