PCS3P2191A

Product Preview

Spread Spectrum Clock Generator

ON Semiconductor®

http://onsemi.com

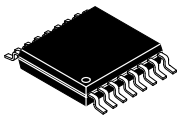

TSSOP−16
T SUFFIX
CASE 948AN

Description

PCS3P2191A is a versatile spread spectrum frequency modulator that generates four low EMI 4x clocks at the output. PCS3P2191A offers seven selectable centre spread options of ±0.5% to ±2.0%, and a no spread option. *(*Refer to *Spread Deviation Selection Table)*. PCS3P2191A reduces electromagnetic interference (EMI) at the clock source, allowing system wide reduction of EMI of all clock dependent signals. The PCS3P2191A allows significant system cost savings by reducing the number of circuit board layers, ferrite beads, and shielding that are traditionally required to pass EMI regulations. The PCS3P2191A uses the most efficient and optimized modulation profile approved by the FCC and is implemented in a proprietary all digital method. The Device is available in 16−Pin TSSOP package, in Commercial and Industrial temperature range.

Application

PCS3P2191A is targeted for LCD panel application.

Features

- Generates Four 4x Low EMI Spread Spectrum Clocks
- Input Frequency: 10 MHz – 25 MHz
- Output Frequency: 40 MHz – 100 MHz
- Internal Loop Filter Minimizes External Components and Board Space
- Selectable Centre Spread Frequency Deviation: ±0.5%, ±0.75%, ±1.0%, ±1.25%, ±1.5%, ±1.75%, ±2.0%
- Supply Voltage: 3.3 V ± 0.3 V
- Commercial and Industrial Temperature Range
- 16−pin TSSOP Package
- Advanced Low Power CMOS Process
- These Devices are Pb−Free, Halogen Free/BFR Free and are RoHS Compliant

This document contains information on a product under development. ON Semiconductor reserves the right to change or discontinue this product without notice.

PIN CONFIGURATION

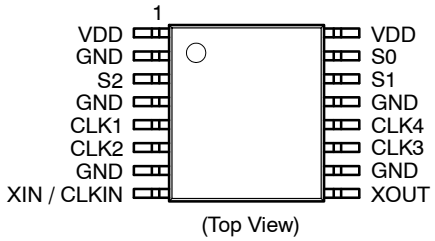

(Top View)

ORDERING INFORMATION

See detailed ordering and shipping information in the package dimensions section on page 7 of this data sheet.

© Semiconductor Components Industries, LLC, 2011

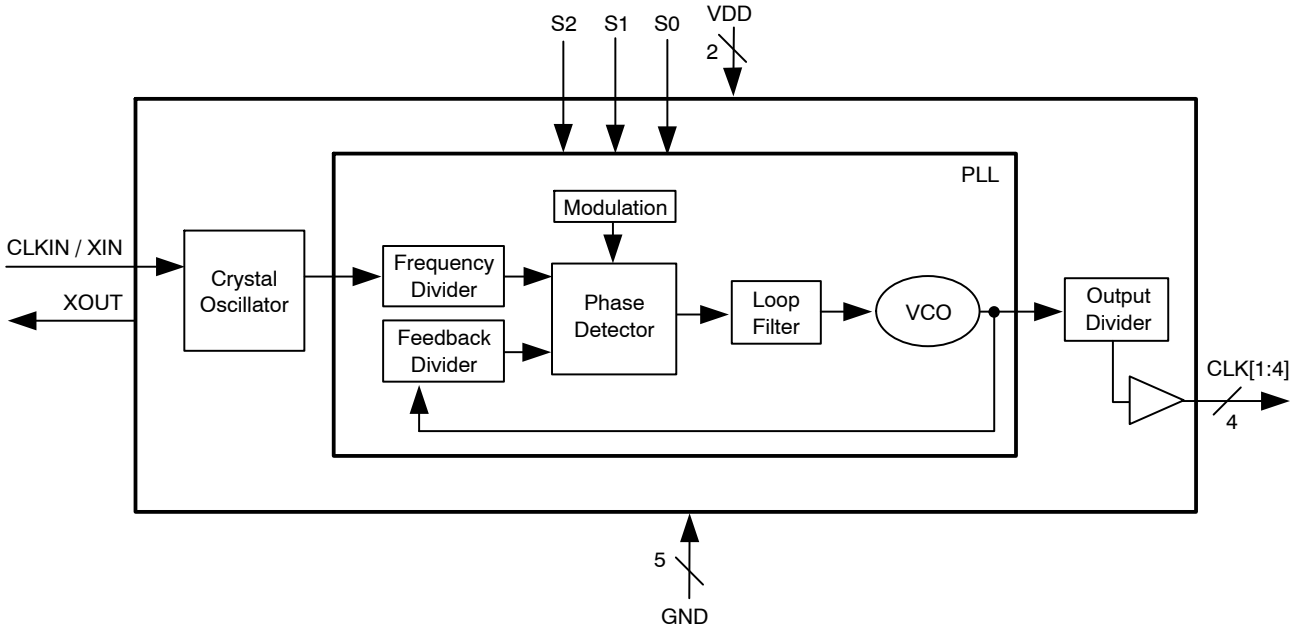

Figure 1. Block Diagram

Table 1. PIN DESCRIPTION

Pin#	Pin Name	Type	Description
1	V_{DD}	P	Power Supply Voltage Pin. Connect to +3.3 V.
2	GND	P	Ground Connection. Connect to system ground.
3	S2	I	Spread range select. Digital logic input used to select frequency deviation (Refer to *Spread Deviation Table*). This pin has an internal pull−up resistor.
4	GND	P	Ground Connection. Connect to system ground.
5	CLK1	O	Low EMI 4x clock output.
6	CLK2	O	Low EMI 4x clock output.
7	GND	P	Ground Connection. Connect to system ground.
8	XIN / CLKIN	I	Crystal connection or external reference clock input.
9	XOUT	O	Crystal connection. If using an external reference, this pin must be left unconnected.
10	GND	P	Ground Connection. Connect to system ground.
11	CLK3	O	Low EMI 4x clock output.
12	CLK4	O	Low EMI 4x clock output.
13	GND	P	Ground Connection. Connect to system ground.
14	S1	I	Spread range select. Digital logic input used to select frequency deviation (Refer to *Spread Deviation Table*). This pin has an internal pull−up resistor.
15	S0	I	Spread range select. Digital logic input used to select frequency deviation (Refer to *Spread Deviation Table*). This pin has an internal pull−up resistor.
16	V_{DD}	P	Power Supply Voltage Pin. Connect to +3.3 V.

Table 2. SPREAD DEVIATION SELECTION (For an Input CLK = 15 MHz.)

S2	S1	S0	Deviation (±%)
0	0	0	OFF
0	0	1	0.5
0	1	0	0.75
0	1	1	1.0
1	0	0	1.25
1	0	1	1.5
1	1	0	1.75
1	1	1	2.0

Table 3. ABSOLUTE MAXIMUM RATINGS

Symbol	Parameter	Rating	Unit
V_{DD}	Supply Voltage pin with respect to Ground	−0.5 to +4.6	V
V_{IN}	Input Voltage pin with respect to Ground	VSS−0.5 to VDD+0.5	V
V_{OUT}	Output Voltage pin with respect to Ground	VSS−0.5 to VDD+0.5	V
T_{STG}	Storage temperature	−55 to +125	°C
T_s	Max. Soldering Temperature (10 sec)	260	°C
T_J	Junction Temperature	150	°C
T_{DV}	Static Discharge Voltage (As per JEDEC STD22− A114−B)	2	KV

Stresses exceeding Maximum Ratings may damage the device. Maximum Ratings are stress ratings only. Functional operation above the Recommended Operating Conditions is not implied. Extended exposure to stresses above the Recommended Operating Conditions may affect device reliability.

Table 4. RECOMMENDED OPERATING CONDITIONS

Parameter	Description	Min	Typ	Max	Unit
V_{DD}	Operating Voltage	3.0	3.3	3.6	V
T_A	Operating Temperature	−40		+85	°C
C_L	Load Capacitance			15	pF
C_{IN}	Input Capacitance		5		pF

Table 5. DC ELECTRICAL CHARACTERISTICS (TA = −40°C to +85°C, VDD = 3.3 V ± 0.3 V)

Symbol	Parameter		Min	Typ	Max	Unit
V_{IL}	Input low voltage		VSS−0.3		0.8	V
V_{IH}	Input high voltage		2.0		VDD+0.3	V
I_{IL}	Input low current	(XIN / CLKIN)			−35	μA
I_{IH}	Input high current				+35	
I_{IL}	Input low current	(S0:S1:S2)			−50	μA
I_{IH}	Input high current				+50	
V_{OL}	Output low voltage	I_{OL} = 12 mA	VSS		0.4	V
V_{OH}	Output high voltage	I_{OH} = −12 mA	2.4		V_{DD}	V
I_{CC}	Dynamic supply current (Unloaded Outputs)		8	15	26	mA
I_{DD}	Static supply current standby mode (Note 1)				8	mA
V_{DD}	Operating voltage		3.0	3.3	3.6	V
t_{ON}	Power up time (first locked clock cycle after power up) (Note 2)				5	mS
Z_{OUT}	Clock output impedance			27		Ω
C_{IN}	Input Capacitance			5		pF
C_L	Load Capacitance				15	pF

1. CLKIN pulled Low.
2. V_{DD} and CLKIN inputs are stable.

Table 6. AC ELECTRICAL CHARACTERISTICS (TA = −40°C to +85°C, VDD = 3.3 V ± 0.3 V)

Symbol	Parameter		Min	Typ	Max	Unit
XIN / CLKIN	Input Clock frequency		10	15	25	MHz
CLKOUT	Output Clock frequency	(Pin 5,6,11,12)	40	60	100	MHz
F_{MOD}	Spread Spectrum Modulation Rate		26	39	65	KHz
t_{LH} (Note 3)	Output rise time (Measured from 20% to 80%)			1.5	2	nS
t_{HL} (Note 3)	Output fall time (Measured from 80% to 20%)			1.0	1.5	nS
	Output frequency Synthesis error (With SSOFF)			0		ppm
t_{JC} (Note 3)	Cycle−to−Cycle Jitter			±250	±325	pS
t_{JP} (Note 3)	Period Jitter (With SSOFF)			±150	±200	pS
t_D (Note 3)	Output duty cycle		45	50	55	%

3. t_{LH} and t_{HL} are measured with a capacitive load of 15 pF.

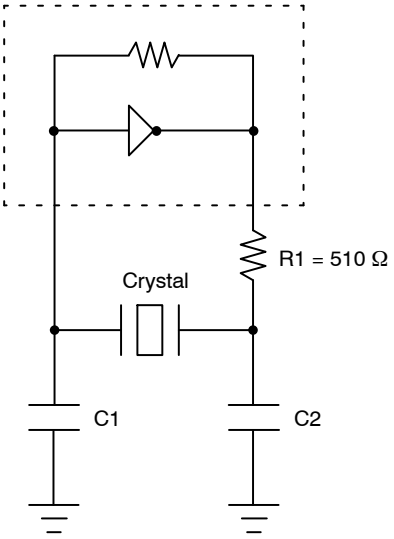

Figure 2. Typical Crystal Oscillator Circuit

Table 7. TYPICAL CRYSTAL SPECIFICATIONS

Fundamental AT Cut Parallel Resonant Crystal	
Nominal frequency	15 MHz
Frequency tolerance	±50 ppm or better at 25°C
Operating temperature range	−45°C to +90°C
Load capacitance	18 pF
Shunt capacitance	7 pF maximum
ESR	25 Ω

PACKAGE DIMENSIONS

TSSOP16, 4.4x5
CASE 948AN−01
ISSUE O

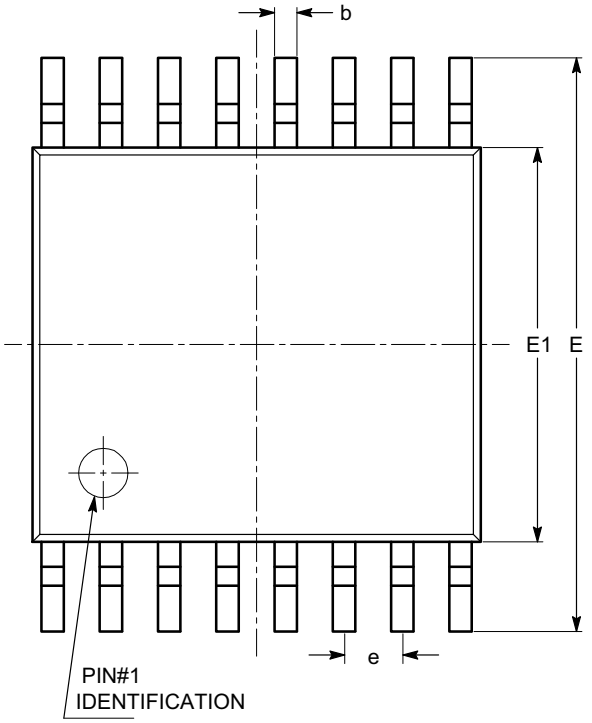

TOP VIEW

SYMBOL	MIN	NOM	MAX
A			1.10
A1	0.05		0.15
A2	0.85		0.95
b	0.19		0.30
c	0.13		0.20
D	4.90		5.10
E	6.30		6.50
E1	4.30		4.50
e	0.65 BSC		
L	1.00 REF		
L1	0.45		0.75
θ	0º		8º

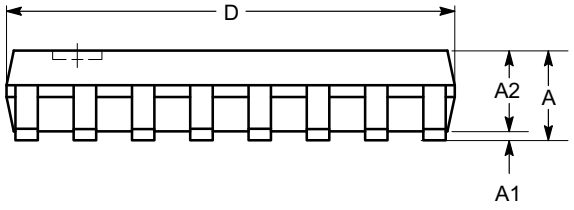

SIDE VIEW

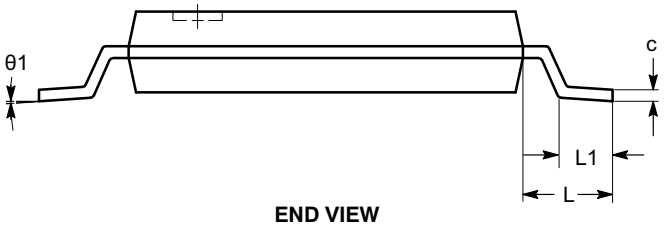

END VIEW

Notes:
(1) All dimensions are in millimeters. Angles in degrees.
(2) Complies with JEDEC MO-153.

Table 8. ORDERING INFORMATION

Part Number	Marking	Package Type	Temperature
PCS3P2191AG−16TT	3P2191AG	16−Pin TSSOP, TUBE, Green	Commercial
PCS3P2191AG−16TR	3P2191AG	16−Pin TSSOP, TAPE & REEL, Green	Commercial
PCS3P2191AF−16TT	3P2191AF	16−Pin TSSOP, TUBE, Pb Free	Commercial
PCS3P2191AF−16TR	3P2191AF	16−Pin TSSOP, TAPE & REEL, Pb Free	Commercial
PCS3I2191AG−16TT	3I2191AG	16−Pin TSSOP, TUBE, Green	Industrial
PCS3I2191AG−16TR	3I2191AG	16−Pin TSSOP, TAPE & REEL, Green	Industrial
PCS3I2191AF−16TT	3I2191AF	16−Pin TSSOP, TUBE, Pb Free	Industrial
PCS3I2191AF−16TR	3I2191AF	16−Pin TSSOP, TAPE & REEL, Pb Free	Industrial

ON Semiconductor and ON are registered trademarks of Semiconductor Components Industries, LLC (SCILLC). SCILLC reserves the right to make changes without further notice to any products herein. SCILLC makes no warranty, representation or guarantee regarding the suitability of its products for any particular purpose, nor does SCILLC assume any liability arising out of the application or use of any product or circuit, and specifically disclaims any and all liability, including without limitation special, consequential or incidental damages. “Typical” parameters which may be provided in SCILLC data sheets and/or specifications can and do vary in different applications and actual performance may vary over time. All operating parameters, including “Typicals” must be validated for each customer application by customer’s technical experts. SCILLC does not convey any license under its patent rights nor the rights of others. SCILLC products are not designed, intended, or authorized for use as components in systems intended for surgical implant into the body, or other applications intended to support or sustain life, or for any other application in which the failure of the SCILLC product could create a situation where personal injury or death may occur. Should Buyer purchase or use SCILLC products for any such unintended or unauthorized application, Buyer shall indemnify and hold SCILLC and its officers, employees, subsidiaries, affiliates, and distributors harmless against all claims, costs, damages, and expenses, and reasonable attorney fees arising out of, directly or indirectly, any claim of personal injury or death associated with such unintended or unauthorized use, even if such claim alleges that SCILLC was negligent regarding the design or manufacture of the part. SCILLC is an Equal Opportunity/Affirmative Action Employer. This literature is subject to all applicable copyright laws and is not for resale in any manner.

PUBLICATION ORDERING INFORMATION

LITERATURE FULFILLMENT:
Literature Distribution Center for ON Semiconductor
P.O. Box 5163, Denver, Colorado 80217 USA
Phone: 303−675−2175 or 800−344−3860 Toll Free USA/Canada
Fax: 303−675−2176 or 800−344−3867 Toll Free USA/Canada
Email: orderlit@onsemi.com

N. American Technical Support: 800−282−9855 Toll Free USA/Canada
Europe, Middle East and Africa Technical Support:
Phone: 421 33 790 2910
Japan Customer Focus Center
Phone: 81−3−5773−3850

ON Semiconductor Website: **www.onsemi.com**

Order Literature: http://www.onsemi.com/orderlit

For additional information, please contact your local Sales Representative