

SLES071B − MARCH 2003 − REVISED NOVEMBER 2006

24-BIT, 192-kHz SAMPLING, ADVANCED SEGMENT, AUDIO STEREO DIGITAL-TO-ANALOG CONVERTER

FEATURES

- 24-Bit Resolution
- Analog Performance:
  - Dynamic Range: 113 dB
  - THD+N: 0.001%
  - Full-Scale Output: 2.1 V RMS (at Postamp)
- Differential Voltage Output: 3.2 Vp-p
- 8× Oversampling Digital Filter:
  - Stop-Band Attenuation: –82 dB
  - Pass-Band Ripple: ±0.002 dB
- Sampling Frequency: 10 kHz to 200 kHz
- System Clock: 128, 192, 256, 384, 512, or 768 f_S With Autodetect
- Accepts 16-, 20-, and 24-Bit Audio Data
- PCM Data Formats: Standard, I^2S, and Left-Justified
- DSD Format Interface Available
- Optional Interface to External Digital Filter or DSP Available
- TDMCA or Serial Port (SPI/I^2C)
- User-Programmable Mode Controls:
  - Digital Attenuation: 0 dB to –120 dB, 0.5 dB/Step
  - Digital De-Emphasis
  - Digital Filter Rolloff: Sharp or Slow
  - Soft Mute
  - Zero Flag for Each Output/PCM and DSD Formats
- Dual Supply Operation:
  - 5-V Analog, 3.3-V Digital
- 5-V Tolerant Digital Inputs
- Small 28-Lead SSOP Package

APPLICATIONS

- A/V Receivers
- SACD Players
- DVD Players
- HDTV Receivers
- Car Audio Systems
- Digital Multitrack Recorders
- Other Applications Requiring 24-Bit Audio

DESCRIPTION

The PCM1791A is a monolithic CMOS integrated circuit that includes stereo digital-to-analog converters and support circuitry in a small 28-lead SSOP package. The data converters use TI's advanced segment DAC architecture to achieve excellent dynamic performance and improved tolerance to clock jitter. The PCM1791A provides balanced voltage outputs, allowing the user to optimize analog performance externally. The PCM1791A accepts PCM and DSD audio data formats, providing easy interfacing to audio DSP and decoder chips. The PCM1791A also accepts interface to external digital filter devices (DF1704, DF1706, PMD200). Sampling rates up to 200 kHz are supported. A full set of user-programmable functions is accessible through an SPI or I^2C serial control port, which supports register write and readback functions. The PCM1791A also supports the time-division-multiplexed command and audio (TDMCA) data format.

This integrated circuit can be damaged by ESD. Texas Instruments recommends that all integrated circuits be handled with appropriate precautions. Failure to observe proper handling and installation procedures can cause damage.

ESD damage can range from subtle performance degradation to complete device failure. Precision integrated circuits may be more susceptible to damage because very small parametric changes could cause the device not to meet its published specifications.

Please be aware that an important notice concerning availability, standard warranty, and use in critical applications of Texas Instruments semiconductor products and disclaimers thereto appears at the end of this data sheet.

PRODUCTION DATA information is current as of publication date. Products conform to specifications per the terms of Texas Instruments standard warranty. Production processing does not necessarily include testing of all parameters.

Copyright © 2006, Texas Instruments Incorporated

ORDERING INFORMATION

PRODUCT	PACKAGE	PACKAGE CODE	OPERATION TEMPERATURE RANGE	PACKAGE MARKING	ORDERING NUMBER	TRANSPORT MEDIA
PCM1791ADB	28-lead SSOP	28DB	−25°C to 85°C	PCM1791A	PCM1791ADB	Tube
					PCM1791ADBR	Tape and reel

ABSOLUTE MAXIMUM RATINGS

over operating free-air temperature range unless otherwise noted(1)

		PCM1791A
Supply voltage	$V_{CC}F$, $V_{CC}L$, $V_{CC}C$, $V_{CC}R$	−0.3 V to 6.5 V
	V_{DD}	−0.3 V to 4 V
Supply voltage differences: $V_{CC}F$, $V_{CC}L$, $V_{CC}C$, $V_{CC}R$		±0.1 V
Ground voltage differences: AGNDF, AGNDL, AGNDC, AGNDR, DGND		±0.1 V
Digital input voltage	LRCK, DATA, BCK, SCK, $\overline{MS}$(2), MDI(2), MC, MUTE, $\overline{RST}$, MSEL	–0.3 V to 6.5 V
	ZEROL, ZEROR, MDO, $\overline{MS}$(3), MDI(3)	–0.3 V to (V_{DD} + 0.3 V) < 4 V
Analog input voltage		–0.3 V to (V_{CC} + 0.3 V) < 6.5 V
Input current (any pins except supplies)		±10 mA
Ambient temperature under bias		–40°C to 125°C
Storage temperature		–55°C to 150°C
Junction temperature		150°C
Lead temperature (soldering)		260°C, 5 s
Package temperature (IR reflow, peak)		260°C

(1) Stresses beyond those listed under “absolute maximum ratings” may cause permanent damage to the device. These are stress ratings only, and functional operation of the device at these or any other conditions beyond those indicated under “recommended operating conditions” is not implied. Exposure to absolute-maximum-rated conditions for extended periods may affect device reliability.
(2) Input mode or I^2C mode.
(3) Output mode except for I^2C mode.

ELECTRICAL CHARACTERISTICS

all specifications at T_A = 25°C, V_{CC} = 5 V, V_{DD} = 3.3 V, f_S = 44.1 kHz, system clock = 256 f_S, and 24-bit data, unless otherwise noted

PARAMETER		PCM1791ADB			UNIT
		MIN	TYP	MAX	
RESOLUTION			24		Bits
DATA FORMAT (PCM Mode)					
	Audio data interface format		Standard, I^2S, left justified		
	Audio data bit length		16-, 20-, 24-bit selectable		
	Audio data format		MSB first, 2s complement		
f_S	Sampling frequency	10		200	kHz
	System clock frequency		128, 192, 256, 384, 512, 768 f_S		
DATA FORMAT (DSD Mode)					
	Audio data interface format		DSD (Direct stream digital)		
	Audio data bit length		1 Bit		
f_S	Sampling frequency		2.8224		MHz
	System clock frequency	2.8224		11.2896	MHz

ELECTRICAL CHARACTERISTICS (Continued)

all specifications at T_A = 25°C, V_{CC} = 5 V, V_{DD} = 3.3 V, f_S = 44.1 kHz, system clock = 256 f_S, and 24-bit data, unless otherwise noted

PARAMETER		TEST CONDITIONS	PCM1791ADB			UNIT
			MIN	TYP	MAX	
DIGITAL INPUT/OUTPUT						
	Logic family			TTL compatible		
V_{IH}	Input logic level		2			VDC
V_{IL}					0.8	
I_{IH}	Input logic current	$V_{IN} = V_{DD}$			10	µA
I_{IL}		V_{IN} = 0 V			–10	
V_{OH}	Output logic level	I_{OH} = –2 mA	2.4			VDC
V_{OL}		I_{OL} = 2 mA			0.4	
I_{OHZ}	High-impedance output logic current (1)	$V_{OUT} = V_{DD}$			10	µA
I_{OLZ}		V_{OUT} = 0 V			−10	
DYNAMIC PERFORMANCE (PCM MODE) (2)						
	THD+N at V_{OUT} = 0 dB	f_S = 44.1 kHz		0.001%	0.002%	
		f_S = 96 kHz		0.0015%		
		f_S = 192 kHz		0.003%		
	Dynamic range	EIAJ, A-weighted, f_S = 44.1 kHz	110	113		dB
		EIAJ, A-weighted, f_S = 96 kHz		113		
		EIAJ, A-weighted, f_S = 192 kHz		113		
	Signal-to-noise ratio	EIAJ, A-weighted, f_S = 44.1 kHz	110	113		dB
		EIAJ, A-weighted, f_S = 96 kHz		113		
		EIAJ, A-weighted, f_S = 192 kHz		113		
	Channel separation	f_S = 44.1 kHz	106	110		dB
		f_S = 96 kHz		110		
		f_S = 192 kHz		109		
	Level linearity error	V_{OUT} = –120 dB		±1		dB
DYNAMIC PERFORMANCE (DSD MODE) (2) (3)						
	THD+N at V_{OUT} = 0 dB	2.1 V rms		0.001%		
	Dynamic range	–60 dB, EIAJ, A-weighted		113		dB
	Signal-to-noise ratio	EIAJ, A-weighted		113		dB
ANALOG OUTPUT						
	Gain error		–8	±3	8	% of FSR
	Gain mismatch, channel-to-channel		–3	±0.5	3	% of FSR
	Bipolar zero error	At BPZ	–2	±0.5	2	% of FSR
	Differential output voltage (4)	Full scale (0 dB)		3.2		V p-p
	Bipolar zero voltage (4)	At BPZ		1.4		V
	Load impedance (4)	$R_1 = R_2$	1.7			kΩ

(1) MDO pin

(2) Dynamic performance and DC accuracy are specified at the output of the postamplifier as shown in Figure 36. Analog performance specifications are measured using the System Two™ Cascade audio measurement system by Audio Precision™ in the averaging mode. For all sampling-frequency operations, measurement bandwidth is limited with a 20-kHz AES17 filter.

(3) Analog performance in the DSD mode is specified as the DSD modulation index of 100%. This is equivalent to PCM−mode performance at 44.1 kHz and 64 f_S.

(4) These parameters are defined at the PCM1791A output pins. Load impedances, R_1 and R_2, are input resistors of the postamplifier. They are defined as dc loads.

Audio Precision and System Two are trademarks of Audio Precision, Inc.
Other trademarks are the property of their respective owners.

ELECTRICAL CHARACTERISTICS (Continued)

all specifications at T_A = 25°C, V_{CC} = 5 V, V_{DD} = 3.3 V, f_S = 44.1 kHz, system clock = 256 f_S, and 24-bit data, unless otherwise noted

PARAMETER		TEST CONDITIONS	PCM1791ADB			UNIT
			MIN	TYP	MAX	
DIGITAL FILTER PERFORMANCE						
	De-emphasis error				±0.1	dB
FILTER CHARACTERISTICS-1: SHARP ROLL OFF						
	Pass band	±0.002 dB			0.454 f_S	
		–3 dB			0.49 f_S	
	Stop band		0.546 f_S			
	Pass-band ripple				±0.002	dB
	Stop-band attenuation	Stop band = 0.546 f_S	–75			dB
		Stop band = 0.567 f_S	−82			
	Delay time			29/f_S		s
FILTER CHARACTERISTICS-2: SLOW ROLL OFF						
	Pass band	±0.04 dB			0.274 f_S	
		–3 dB			0.454 f_S	
	Stop band		0.732 f_S			
	Pass-band ripple				±0.002	dB
	Stop-band attenuation	Stop band = 0.732 f_S	–82			dB
	Delay time			29/f_S		s
POWER SUPPLY REQUIREMENTS						
V_{DD}	Voltage range		3	3.3	3.6	VDC
V_{CC}			4.5	5	5.5	VDC
I_{DD}	Supply current (1)	f_S = 44.1 kHz		6.5	8	mA
		f_S = 96 kHz		13.5		
		f_S = 192 kHz		28		
I_{CC}	Supply current (1)	f_S = 44.1 kHz		14	16	mA
		f_S = 96 kHz		15		
		f_S = 192 kHz		16		
	Power dissipation (1)	f_S = 44.1 kHz		90	110	mW
		f_S = 96 kHz		120		
		f_S = 192 kHz		170		
TEMPERATURE RANGE						
	Operation temperature		–25		85	°C
θ_{JA}	Thermal resistance	28-pin SSOP		100		°C/W

(1) Input is BPZ data.

PIN ASSIGNMENTS

PCM1791A
(TOP VIEW)

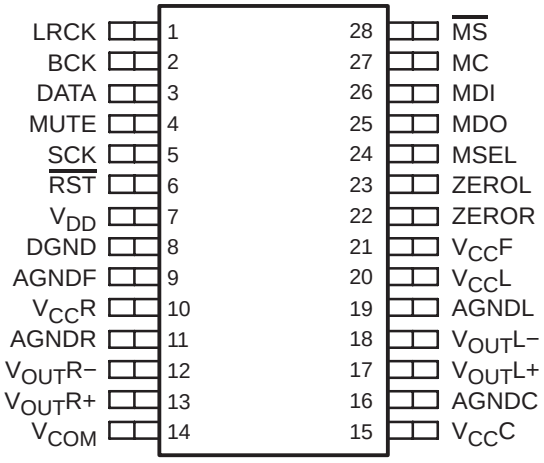

Terminal Functions

TERMINAL NAME	TERMINAL PIN	I/O	DESCRIPTIONS
AGNDC	16	−	Analog ground (internal bias and current DAC)
AGNDF	9	−	Analog ground (DACFF)
AGNDL	19	−	Analog ground (L-channel I/V)
AGNDR	11	−	Analog ground (R-channel I/V)
BCK	2	I	Bit clock input (1)
DATA	3	I	Serial audio data input (1)
DGND	8	−	Digital ground
LRCK	1	I	Left and right clock (f_S) input (1)
MC	27	I	Mode control clock input (1)
MDI	26	I/O	Mode control data input (2)
MDO	25	O	Mode control readback data output (3)
$\overline{MS}$	28	I/O	Mode control chip select input (4)
MSEL	24	I	$I^2C/\overline{SPI}$ select (1)
MUTE	4	I	Analog output mute control (1)
$\overline{RST}$	6	I	Reset (1)
SCK	5	I	System clock input (1)
$V_{CC}C$	15	−	Analog power supply (internal bias and current DAC), 5 V
$V_{CC}F$	21	−	Analog power supply (DACFF), 5 V
$V_{CC}L$	20	−	Analog power supply (L-channel I/V), 5 V
$V_{CC}R$	10	−	Analog power supply (R-channel I/V), 5 V
V_{COM}	14	−	Internal bias decoupling pin
V_{DD}	7	−	Digital power supply, 3.3 V
$V_{OUT}L+$	17	O	L-channel analog voltage output +
$V_{OUT}L-$	18	O	L-channel analog voltage output –
$V_{OUT}R+$	13	O	R-channel analog voltage output +
$V_{OUT}R-$	12	O	R-channel analog voltage output –
ZEROL	23	O	Zero flag for L-channel
ZEROR	22	O	Zero flag for R-channel

(1) Schmitt-trigger input, 5-V tolerant
(2) Schmitt-trigger input and output. 5-V tolerant input. In I^2C mode, this pin becomes an open-drain 3-state output; otherwise, this pin is a CMOS output.
(3) 3-state output
(4) Schmitt-trigger input and output. 5-V tolerant input and CMOS output

FUNCTIONAL BLOCK DIAGRAM

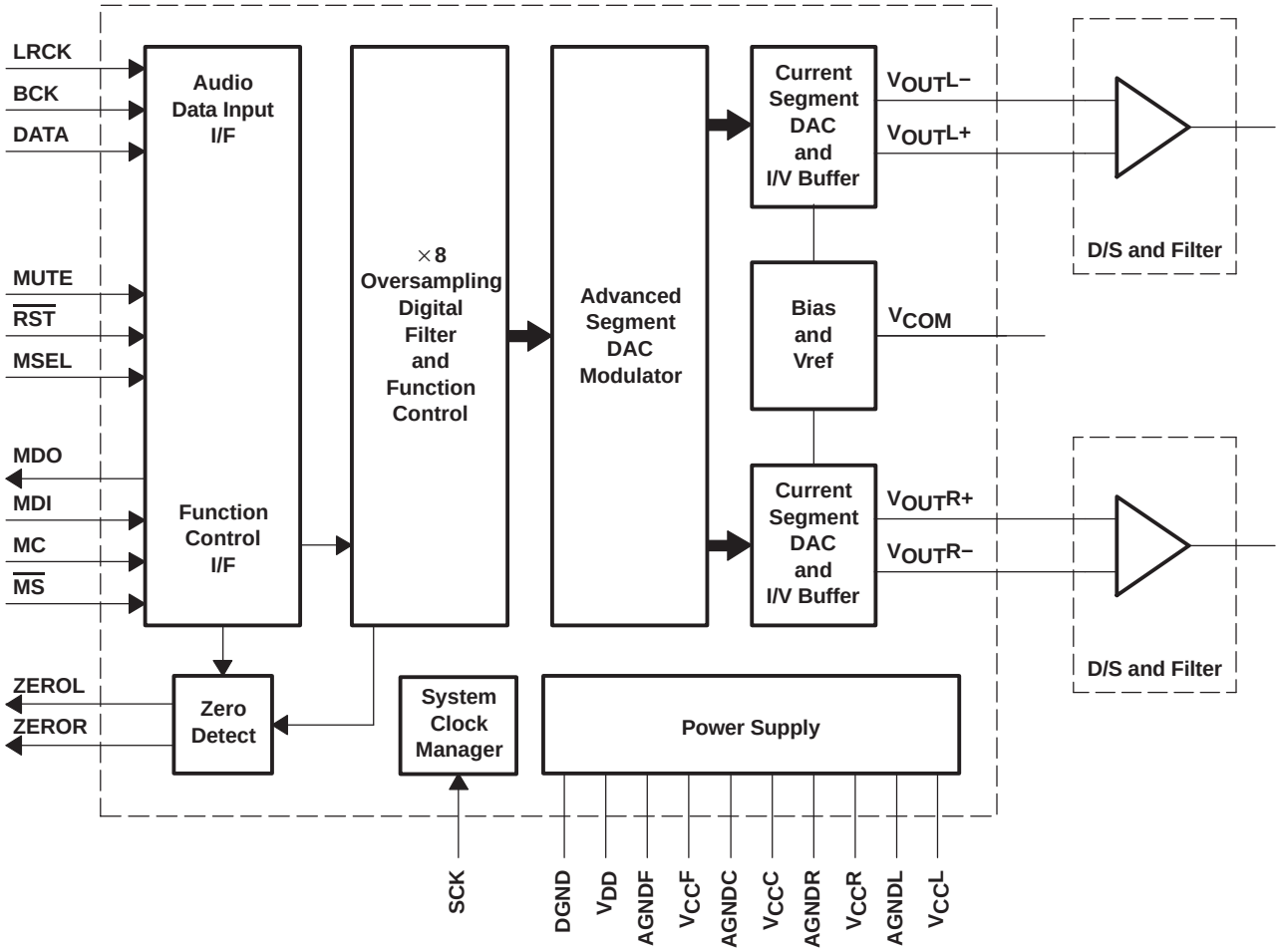

TYPICAL PERFORMANCE CURVES

DIGITAL FILTER

Digital Filter Response

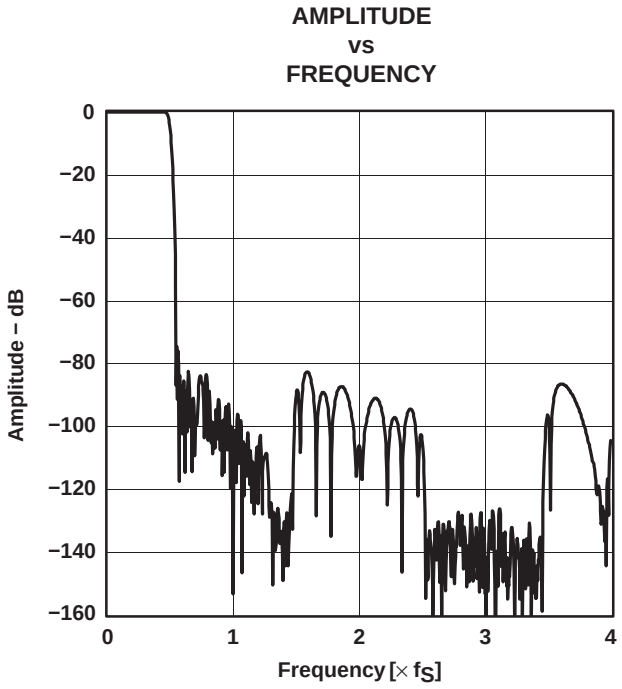

Figure 1. Frequency Response, Sharp Rolloff

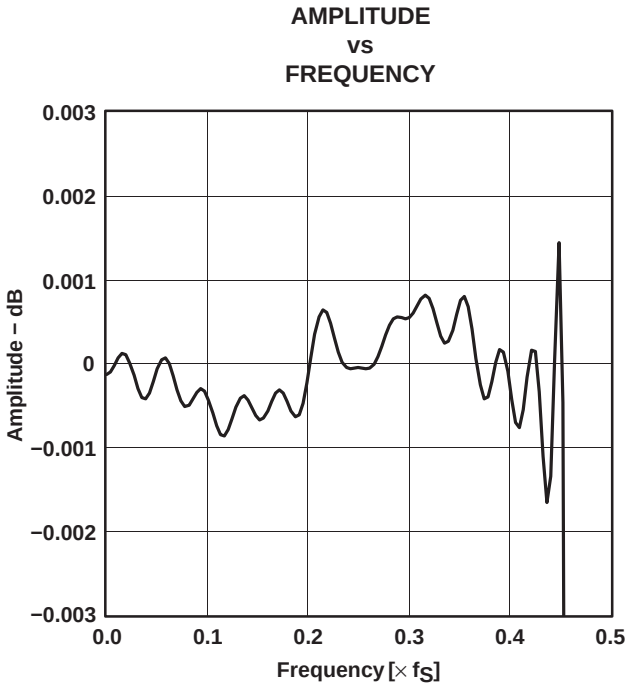

Figure 2. Pass-Band Ripple, Sharp Rolloff

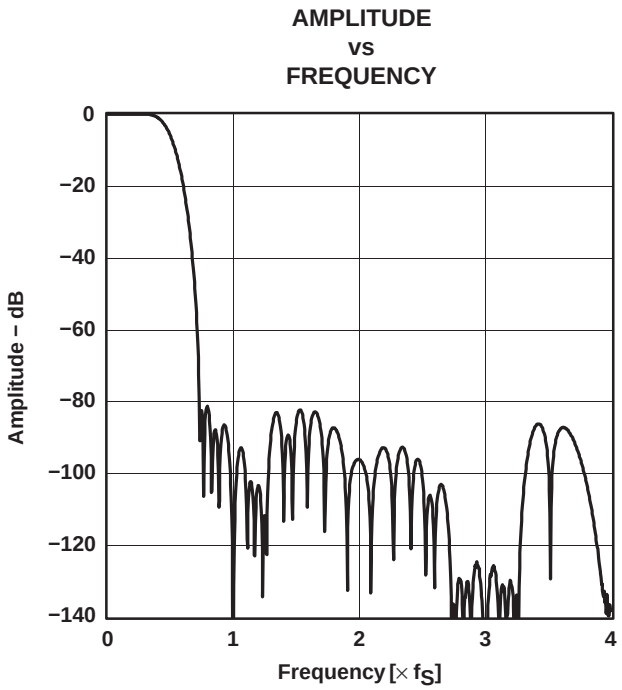

Figure 3. Frequency Response, Slow Rolloff

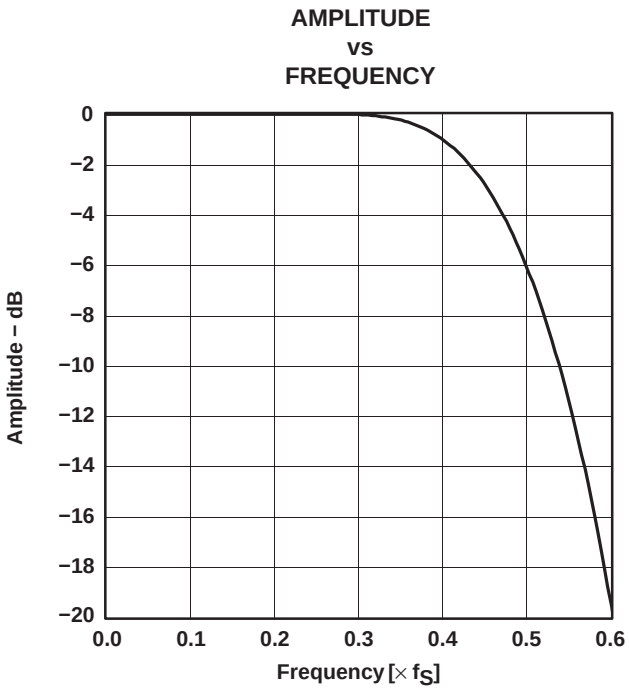

Figure 4. Transition Characteristics, Slow Rolloff

De-Emphasis Filter

DE-EMPHASIS LEVEL
vs
FREQUENCY

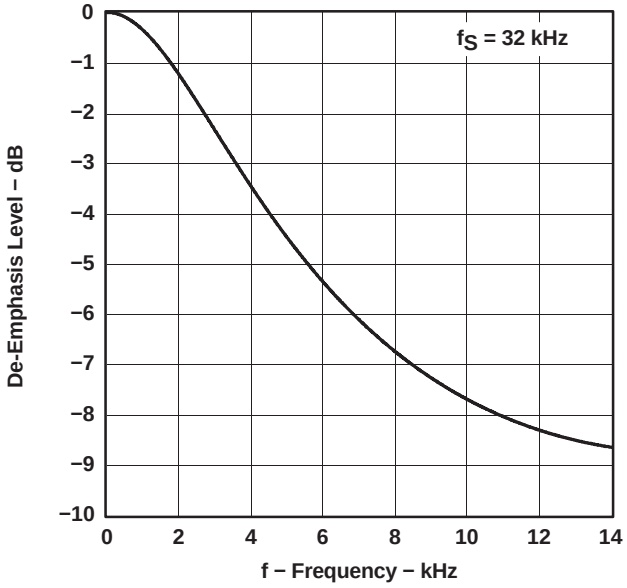

Figure 5

DE-EMPHASIS ERROR
vs
FREQUENCY

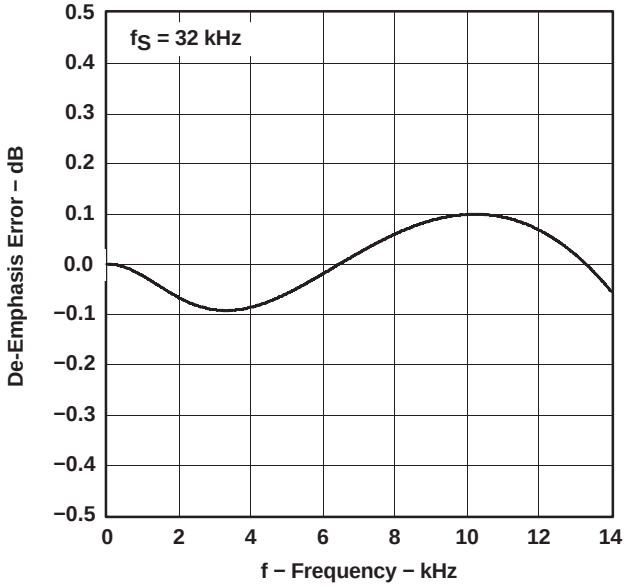

Figure 6

DE-EMPHASIS LEVEL
vs
FREQUENCY

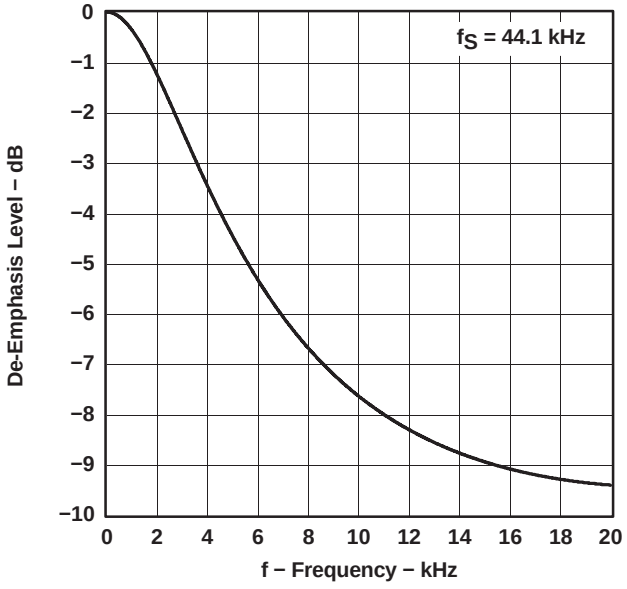

Figure 7

DE-EMPHASIS ERROR
vs
FREQUENCY

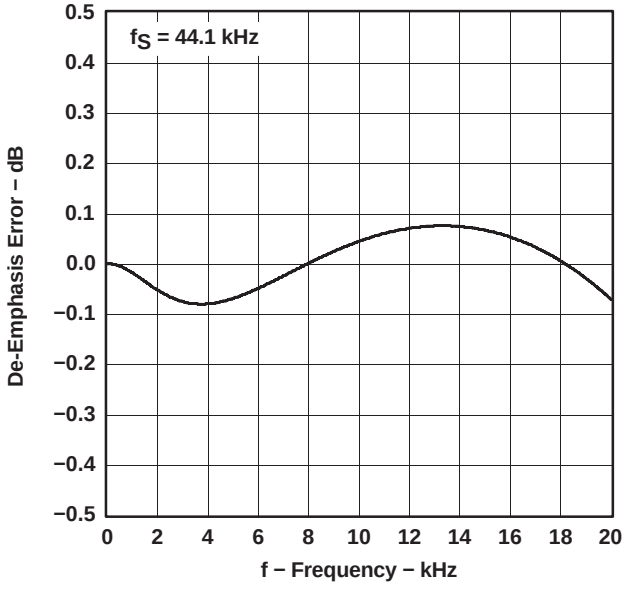

Figure 8

De-Emphasis Filter (Continued)

DE-EMPHASIS LEVEL vs FREQUENCY

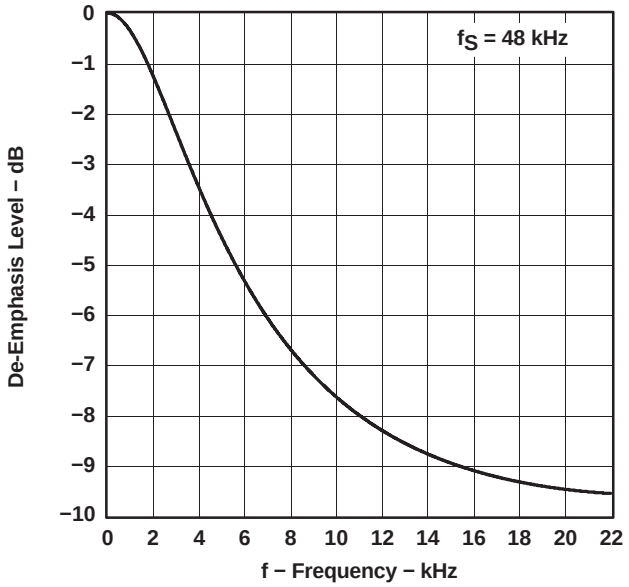

Figure 9

DE-EMPHASIS ERROR vs FREQUENCY

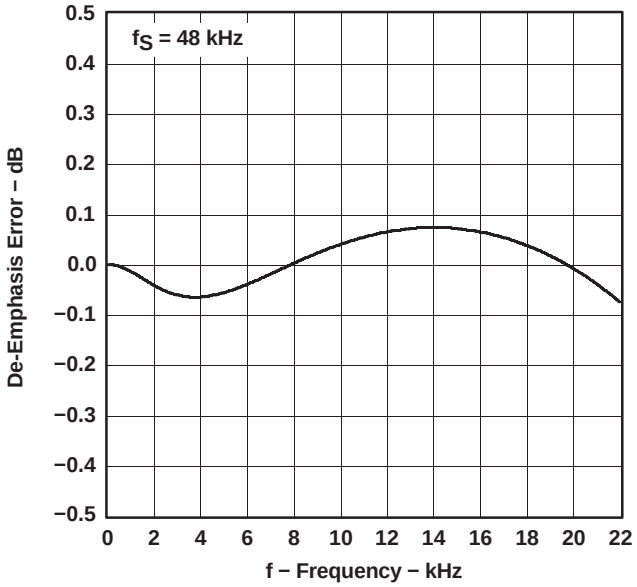

Figure 10

ANALOG DYNAMIC PERFORMANCE

Supply Voltage Characteristics

TOTAL HARMONIC DISTORTION + NOISE
vs
SUPPLY VOLTAGE

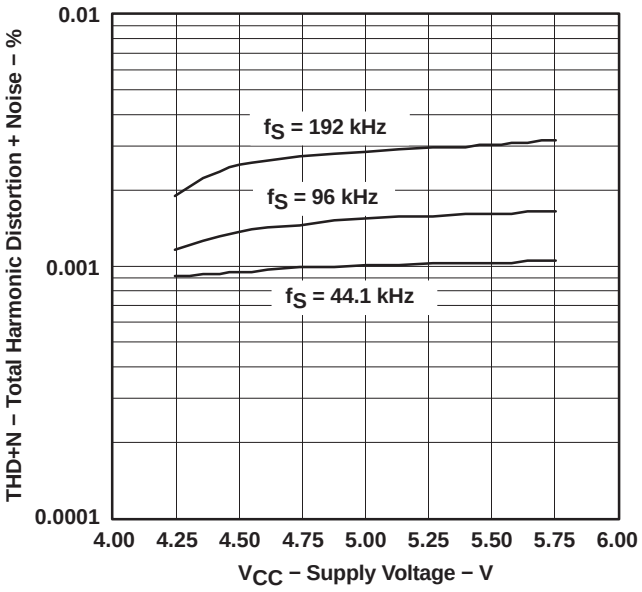

Figure 11

DYNAMIC RANGE
vs
SUPPLY VOLTAGE

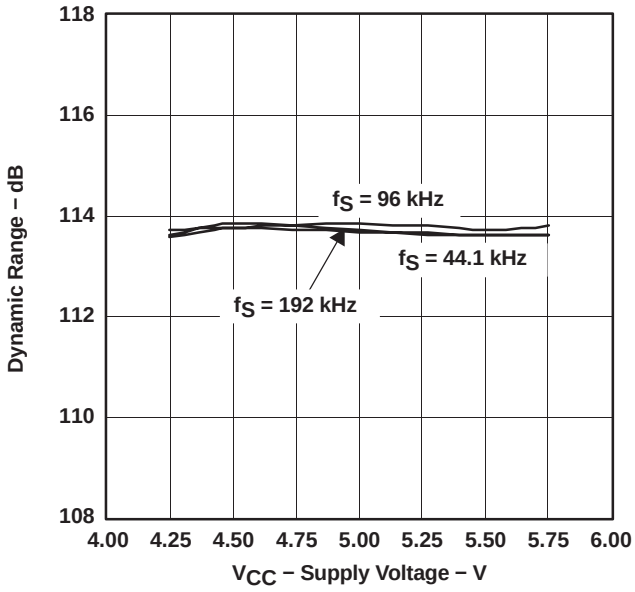

Figure 12

SIGNAL-to-NOISE RATIO
vs
SUPPLY VOLTAGE

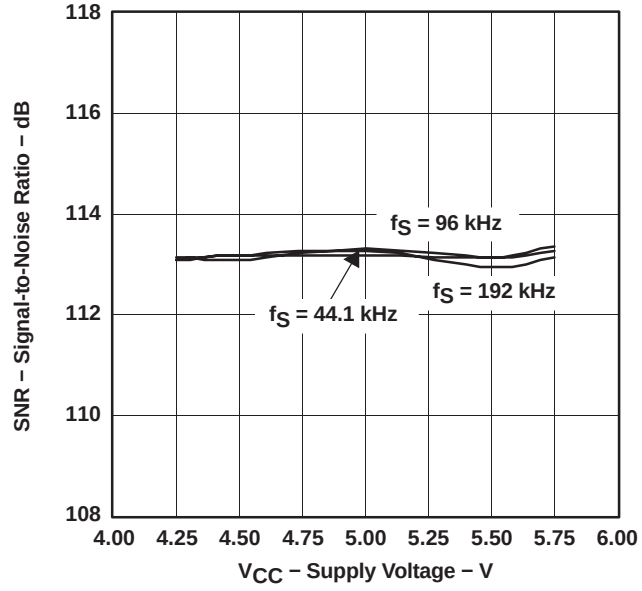

Figure 13

CHANNEL SEPARATION
vs
SUPPLY VOLTAGE

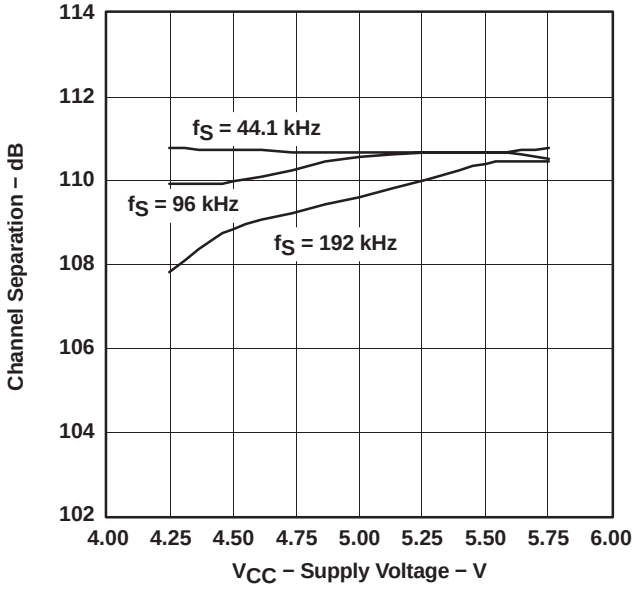

Figure 14

NOTE: PCM mode, T_A = 25°C, V_{DD} = 3.3 V.

Temperature Characteristics

TOTAL HARMONIC DISTORTION + NOISE vs FREE-AIR TEMPERATURE

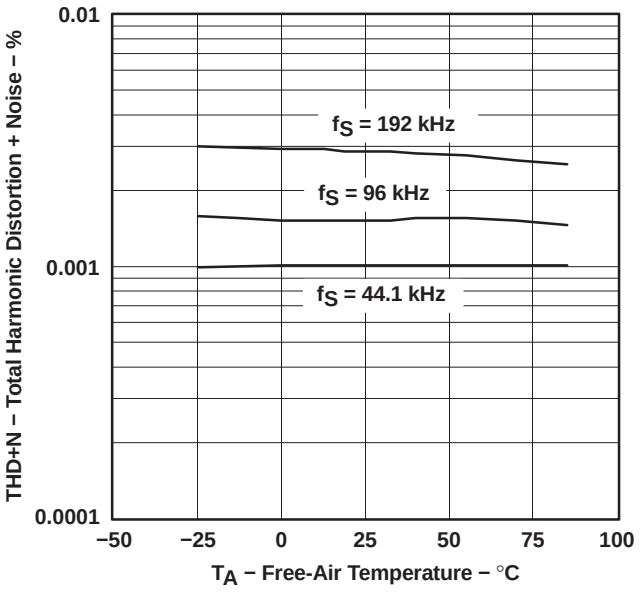

Figure 15

DYNAMIC RANGE vs FREE-AIR TEMPERATURE

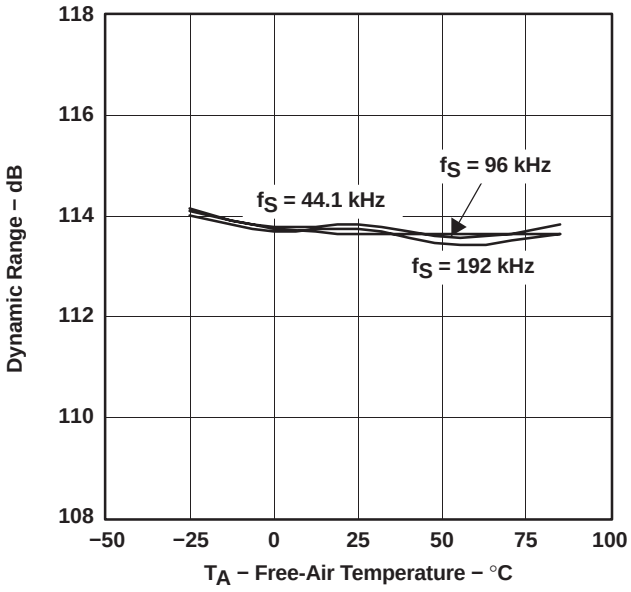

Figure 16

SIGNAL-to-NOISE RATIO vs FREE-AIR TEMPERATURE

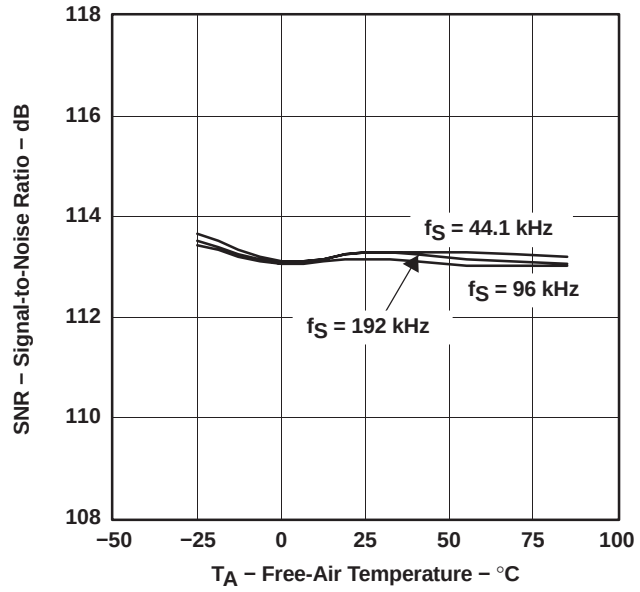

Figure 17

CHANNEL SEPARATION vs FREE-AIR TEMPERATURE

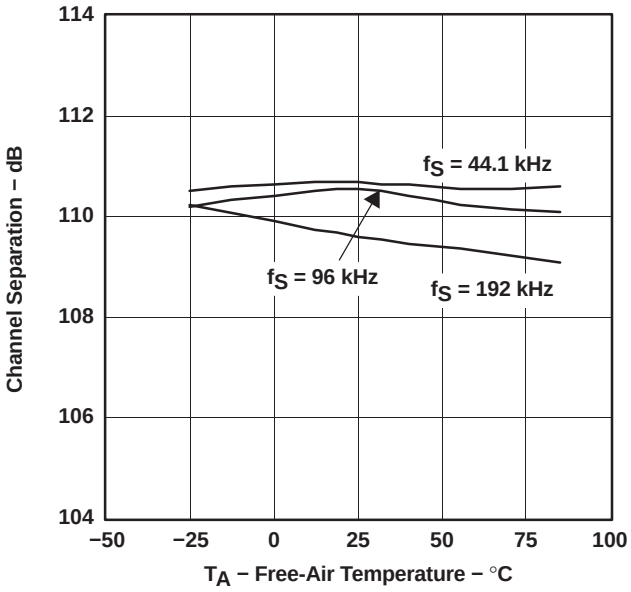

Figure 18

NOTE: PCM mode, V_{DD} = 3.3 V, V_{CC} = 5 V.

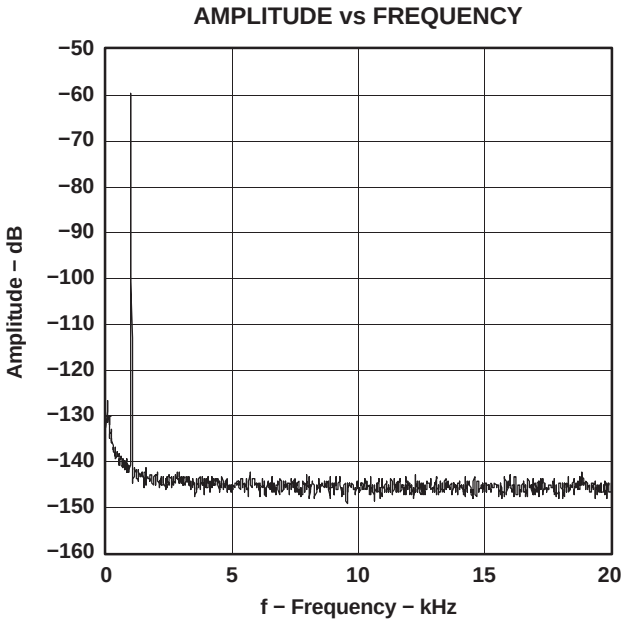

Figure 19. −60-dB Output Spectrum, BW = 20 kHz

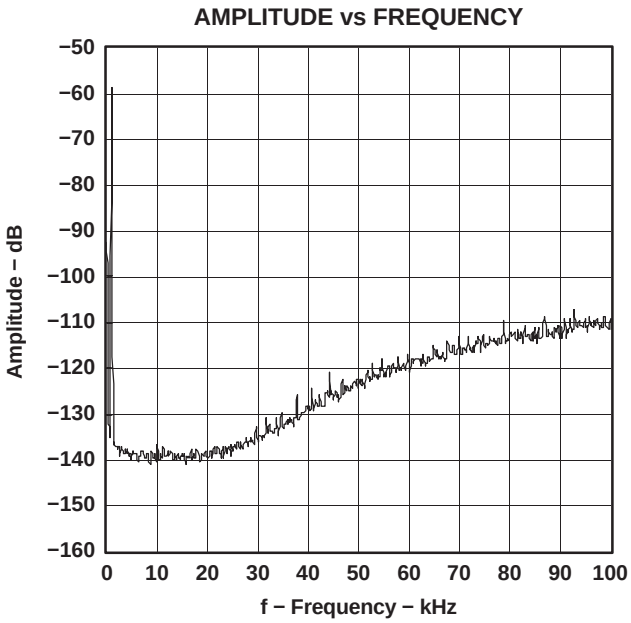

Figure 20. −60-dB Output Spectrum, BW = 100 kHz

NOTE: PCM mode, f_S = 44.1 kHz, 32768 points, 8 average, T_A = 25°C, V_{DD} = 3.3 V, V_{CC} = 5 V.

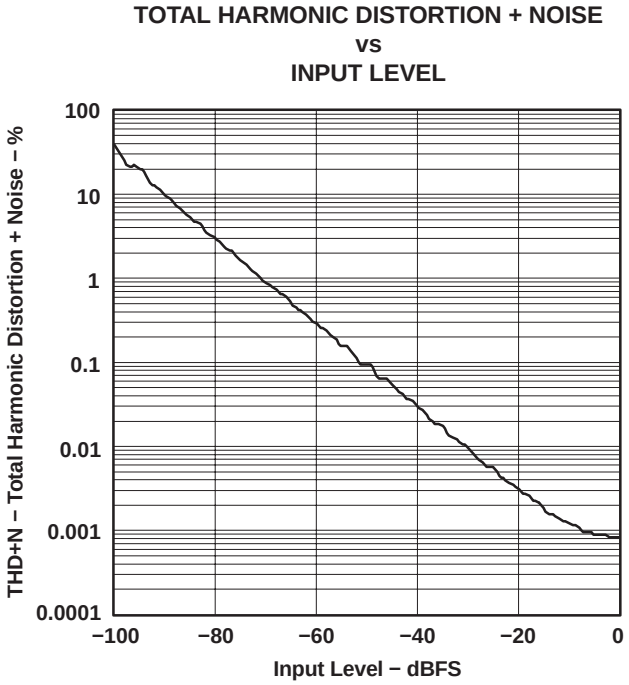

Figure 21. THD+N vs Input Level, PCM Mode

NOTE: PCM mode, f_S = 44.1 kHz, T_A = 25°C, V_{DD} = 3.3 V, V_{CC} = 5 V.

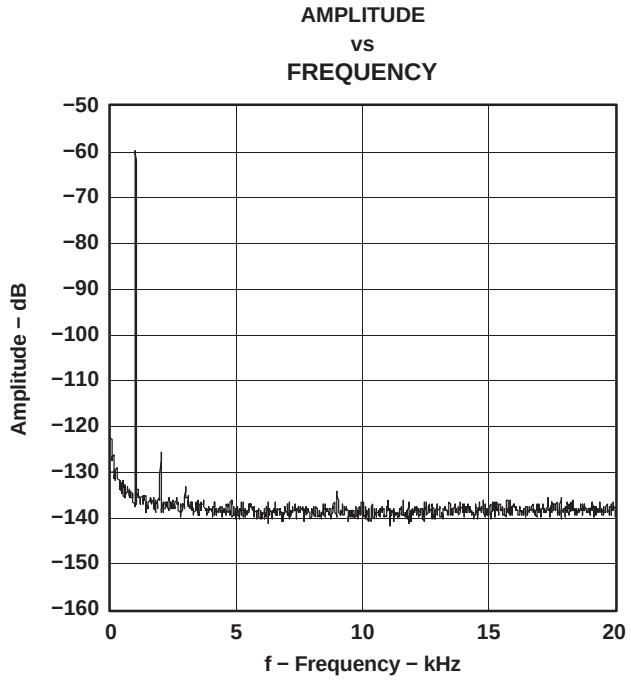

Figure 22. −60-dB Output Spectrum, DSD Mode

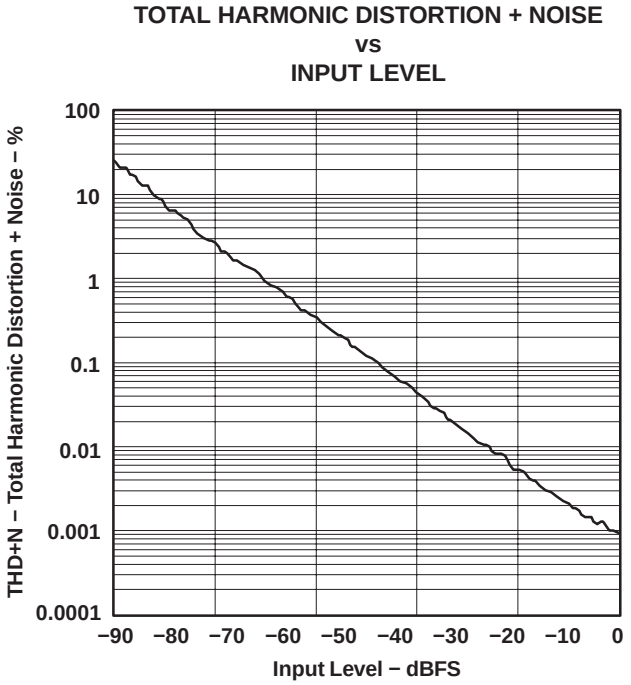

Figure 23. THD+N vs Input Level, DSD Mode

NOTE: DSD mode (FIR-2), T_A = 25°C, V_{DD} = 3.3 V, V_{CC} = 5 V.

SYSTEM CLOCK AND RESET FUNCTIONS

System Clock Input

The PCM1791A requires a system clock for operating the digital interpolation filters and advanced segment DAC modulators. The system clock is applied at the SCK input (pin 5). The PCM1791A has a system clock detection circuit that automatically senses which frequency the system clock is operating. Table 1 shows examples of system clock frequencies for common audio sampling rates. If the oversampling rate of the delta-sigma modulator is selected as 128 f_S, the system clock frequency is over 256 f_S.

Figure 24 shows the timing requirements for the system clock input. For optimal performance, it is important to use a clock source with low phase jitter and noise. One of the Texas Instruments' PLL1700 family of multiclock generators is an excellent choice for providing the PCM1791A system clock.

Table 1. System Clock Rates for Common Audio Sampling Frequencies

SAMPLING FREQUENCY	SYSTEM CLOCK FREQUENCY (f_{SCK}) (MHz)					
	128 f_S	192 f_S	256 f_S	384 f_S	512 f_S	768 f_S
32 kHz	4.096(1)	6.144(1)	8.192	12.288	16.384	24.576
44.1 kHz	5.6488(1)	8.4672	11.2896	16.9344	22.5792	33.8688
48 kHz	6.144(1)	9.216	12.288	18.432	24.576	36.864
96 kHz	12.288	18.432	24.576	36.864	49.152(1)	73.728(1)
192 kHz	24.576	36.864	49.152(1)	73.728(1)	(2)	(2)

(1) This system clock rate is not supported in I^2C fast mode.
(2) This system clock rate is not supported for the given sampling frequency.

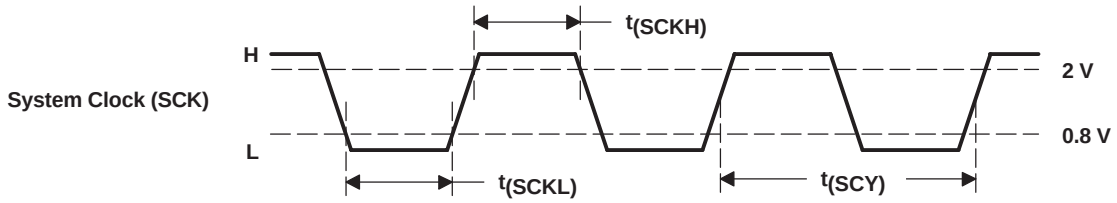

PARAMETERS		MIN	MAX	UNITS
$t_{(SCY)}$	System clock pulse cycle time	13		ns
$t_{(SCKH)}$	System clock pulse duration, HIGH	5		ns
$t_{(SCKL)}$	System clock pulse duration, LOW	5		ns

Figure 24. System Clock Input Timing

Power-On and External Reset Functions

The PCM1791A includes a power-on reset function. Figure 25 shows the operation of this function. With V_{DD} > 2 V, the power-on reset function is enabled. The initialization sequence requires 1024 system clocks from the time V_{DD} > 2 V. After the initialization period, the PCM1791A is set to its default reset state, as described in the *MODE CONTROL REGISTERS* section of this data sheet.

The PCM1791A also includes an external reset capability using the $\overline{RST}$ input (pin 6). This allows an external controller or master reset circuit to force the PCM1791A to initialize to its default reset state.

Figure 26 shows the external reset operation and timing. The $\overline{RST}$ pin is set to logic 0 for a minimum of 20 ns. The $\overline{RST}$ pin is then set to a logic 1 state, thus starting the initialization sequence, which requires 1024 system clock periods. The external reset is especially useful in applications where there is a delay between the PCM1791A power up and system clock activation.

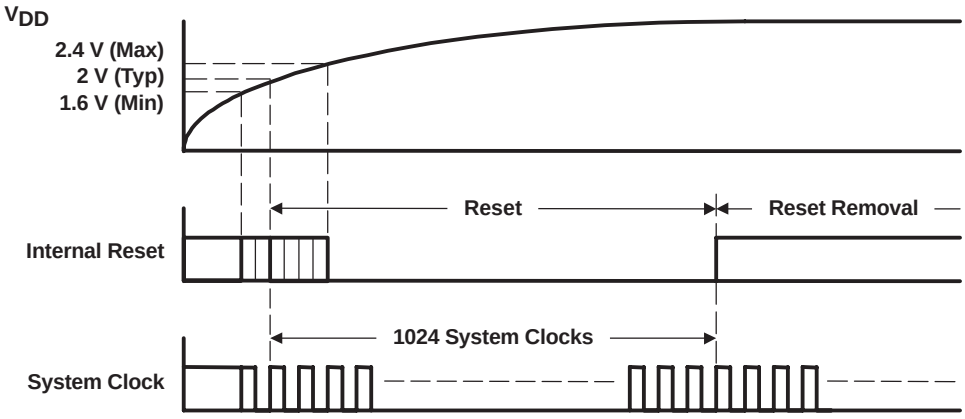

Figure 25. Power-On Reset Timing

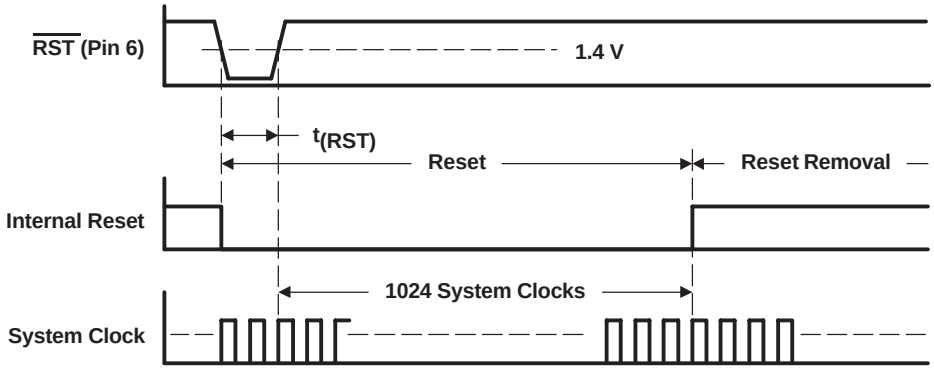

PARAMETERS		MIN	MAX	UNITS
$t_{(RST)}$	Reset pulse duration, LOW	20		ns

Figure 26. External Reset Timing

AUDIO DATA INTERFACE

Audio Serial Interface

The audio interface port is a 3-wire serial port. It includes LRCK (pin 1), BCK (pin 2), and DATA (pin 3). BCK is the serial audio bit clock, and it is used to clock the serial data present on DATA into the serial shift register of the audio interface. Serial data is clocked into the PCM1791A on the rising edge of BCK. LRCK is the serial audio left/right word clock.

The PCM1791A requires the synchronization of LRCK and the system clock, but does not need a specific phase relationship between LRCK and the system clock.

If the relationship between LRCK and system clock changes more than ±6 BCK, internal operation is initialized within $1/f_S$ and analog outputs are forced to the bipolar zero level until resynchronization between LRCK and the system clock is completed.

PCM Audio Data Formats and Timing

The PCM1791A supports industry-standard audio data formats, including standard right-justified, I^2S, and left-justified. The data formats are shown in Figure 28. Data formats are selected using the format bits, FMT[2:0], in control register 18. The default data format is 24-bit I^2S. All formats require binary 2s complement, MSB-first audio data. Figure 27 shows a detailed timing diagram for the serial audio interface.

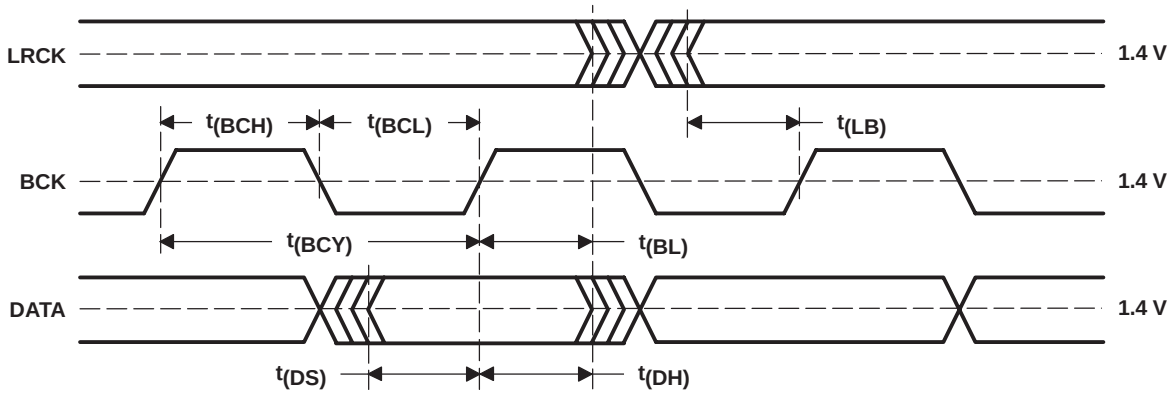

PARAMETERS		MIN	MAX	UNITS
$t_{(BCY)}$	BCK pulse cycle time	70		ns
$t_{(BCL)}$	BCK pulse duration, LOW	30		ns
$t_{(BCH)}$	BCK pulse duration, HIGH	30		ns
$t_{(BL)}$	BCK rising edge to LRCK edge	10		ns
$t_{(LB)}$	LRCK edge to BCK rising edge	10		ns
$t_{(DS)}$	DATA setup time	10		ns
$t_{(DH)}$	DATA hold time	10		ns
—	LRCK clock data	50% ± 2 bit clocks		

Figure 27. Timing of Audio Interface

(1) Standard Data Format (Right Justified) ; L-Channel = HIGH, R-Channel = LOW

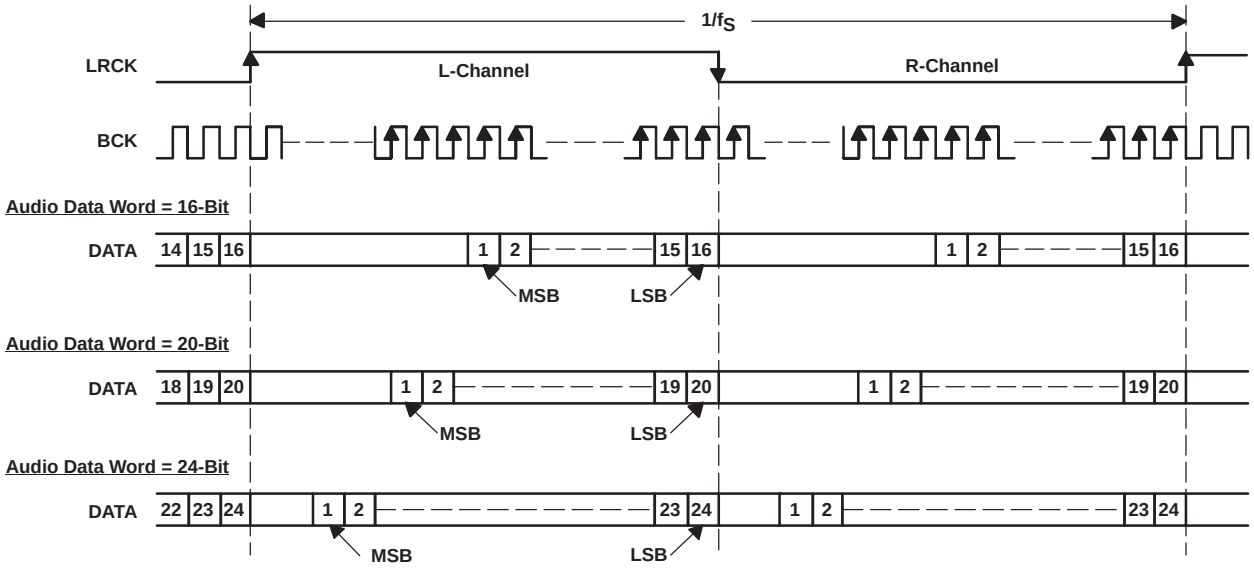

(2) Left Justified Data Format; L-Channel = HIGH, R-Channel = LOW

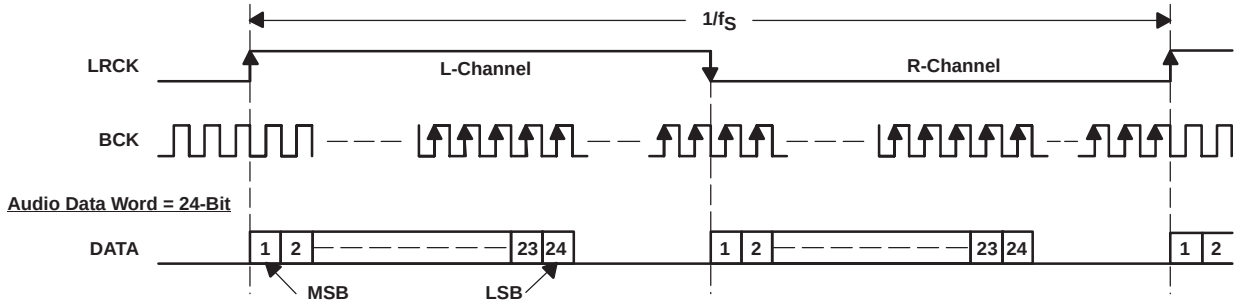

(3) I²S Data Format; L-Channel = LOW, R-Channel = HIGH

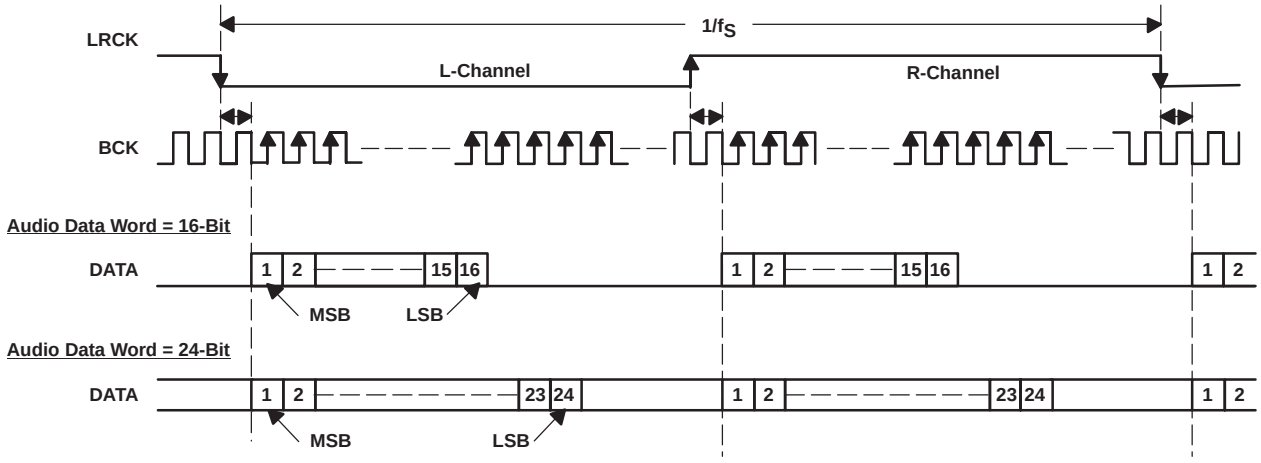

Figure 28. Audio Data Input Formats

External Digital Filter Interface and Timing

The PCM1791A supports an external digital filter interface comprising a 4-wire synchronous serial port, which allows the use of an external digital filter. External filters include the Texas Instruments DF1704 and DF1706, the Pacific Microsonics PMD200, or a programmable digital signal processor.

In the external DF mode, LRCK (pin 1), BCK (pin 2), DATA (pin 3), and MUTE (pin 4) are defined as WDCK, the word clock; BCK, the bit clock; DATAL, the L-channel data; and DATAR, the R-channel data, respectively. The external digital filter interface is selected by using the DFTH bit of control register 20, which functions to bypass the internal digital filter of the PCM1791A.

Detailed information for the external digital filter interface mode is provided in the *APPLICATION FOR EXTERNAL DIGITAL FILTER INTERFACE* section of this data sheet.

Direct Stream Digital (DSD) Format Interface and Timing

The PCM1791A supports the DSD format interface operation, which includes out-of-band noise filtering using an internal analog FIR filter. For DSD operation, SCK (pin 5) is redefined as BCK, DATA (pin 3) as DATAL (left-channel audio data), and LRCK (pin 1) as DATAR (right-channel audio data). BCK (pin 2) must be forced low in the DSD mode. The DSD format (DSD mode) interface is activated by setting the DSD bit of control register 20.

Detailed information for the DSD mode is provided in the *APPLICATION FOR DSD FORMAT (DSD MODE) INTERFACE* section of this data sheet.

TDMCA Interface

The PCM1791A supports the time-division-multiplexed command and audio (TDMCA) data format to enable control of and communication with a number of external devices over a single serial interface.

Detailed information for the TDMCA format is provided in the *TDMCA INTERFACE FORMAT* section of this data sheet.

FUNCTION DESCRIPTIONS

Zero Detect

The PCM1791A has a zero-detect function. When the PCM1791A detects the zero conditions as shown in Table 2, the PCM1791A sets ZEROL (pin 23) and ZEROR (pin 22) to HIGH.

Table 2. Zero Conditions

MODE		DETECTING CONDITION AND TIME
PCM		DATA is continuously LOW for 1024 LRCKs.
External DF mode		DATA is continuously LOW for 1024 WDCKs.
DSD	DZ0	There are an equal number of 1s and 0s in every 8 bits of DSD input data for 23 ms.
	DZ1	The input data is 1001 0110 continuously for 23 ms.

Soft Mute

The PCM1791A supports the mute operation by both hardware and software control. When MUTE (pin 4) is set to HIGH, or the MUTE bit in mode register 18 is set to 1, both analog outputs are attenuated to the bipolar zero level in a series of –0.5-dB steps. The duration of the steps is controlled by the setting of the ATS0 and ATS1 bits in mode register 19.

Serial Control Interface

The PCM1791A supports SPI and I^2C that sets mode control registers as shown in Table 4. The serial control interface is selected by MSEL (pin 24); SPI is activated when MSEL is set to LOW, and I^2C is activated when MSEL is set to HIGH.

SPI Interface

The SPI interface is a 4-wire synchronous serial port which operates asynchronously to the serial audio interface and the system clock (SCK). The serial control interface is used to program and read the on-chip mode registers. The control interface includes MDO (pin 25), MDI (pin 26), MC (pin 27), and $\overline{MS}$ (pin 28). MDO is the serial data output, used to read back the values of the mode registers; MDI is the serial data input, used to program the mode registers; MC is the serial bit clock, used to shift data in and out of the control port, and $\overline{MS}$ is the mode control enable, used to enable the internal mode register access.

Register Read/Write Operation

All read/write operations for the serial control port use 16-bit data words. Figure 29 shows the control data word format. The most significant bit is the read/write (R/$\overline{W}$) bit. For write operations, the R/$\overline{W}$ bit must be set to 0. For read operations, the R/$\overline{W}$ bit must be set to 1. There are seven bits, labeled IDX[6:0], that hold the register index (or address) for the read and write operations. The least significant eight bits, D[7:0], contain the data to be written to, or the data that was read from, the register specified by IDX[6:0].

Figure 30 shows the functional timing diagram for writing or reading the serial control port. $\overline{MS}$ is held at a logic 1 state until a register needs to be written or read. To start the register write or read cycle, $\overline{MS}$ is set to logic 0. Sixteen clocks are then provided on MC, corresponding to the 16 bits of the control data word on MDI and readback data on MDO. After the eighth clock cycle has completed, the data from the indexed-mode control register appears on MDO during the read operation. After the sixteenth clock cycle has completed, the data is latched into the indexed-mode control register during the write operation. To write or read subsequent data, $\overline{MS}$ must be set to 1 once.

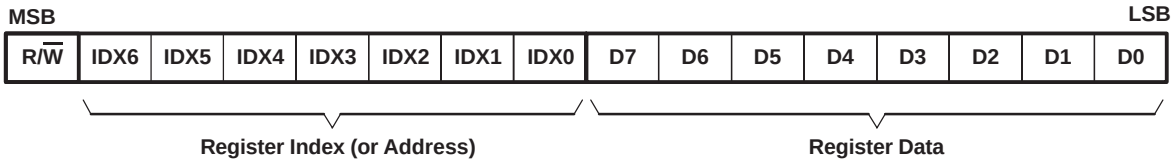

Figure 29. Control Data Word Format for MDI

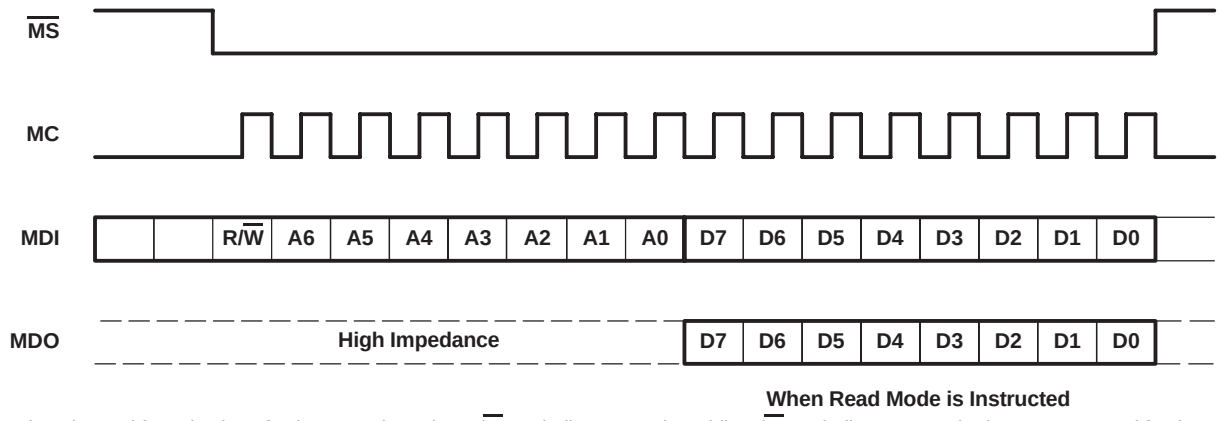

NOTE: Bit 15 is used for selection of write or read. Setting R/$\overline{W}$ = 0 indicates a write, while R/$\overline{W}$ = 1 indicates a read. Bits 14−8 are used for the register address. Bits 7–0 are used for register data.

Figure 30. Serial Control Format

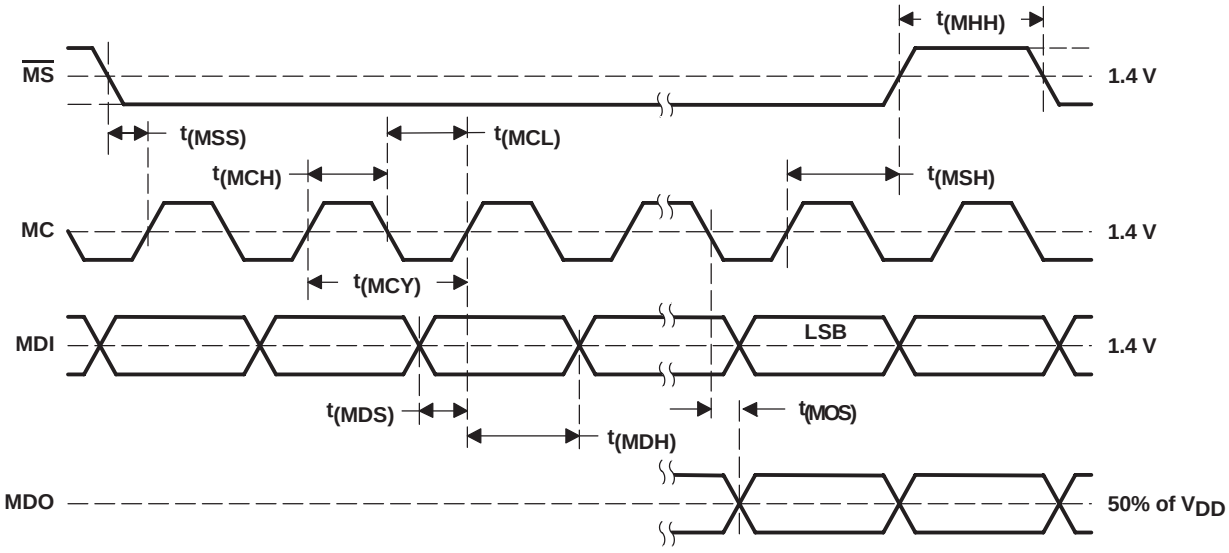

PARAMETER		MIN	MAX	UNITS
$t_{(MCY)}$	MC pulse cycle time	100		ns
$t_{(MCL)}$	MC low-level time	40		ns
$t_{(MCH)}$	MC high-level time	40		ns
$t_{(MHH)}$	$\overline{MS}$ high-level time	80		ns
$t_{(MSS)}$	$\overline{MS}$ falling edge to MC rising edge	15		ns
$t_{(MSH)}$	$\overline{MS}$ hold time(1)	15		ns
$t_{(MDH)}$	MDI hold time	15		ns
$t_{(MDS)}$	MDI setup time	15		ns
$t_{(MOS)}$	MC falling edge to MDO stable		30	ns

(1) MC rising edge for LSB to $\overline{MS}$ rising edge

Figure 31. Control Interface Timing

I²C Interface

The PCM1791A supports the I²C serial bus and the data transmission protocol for standard and fast mode as a slave device. This protocol is explained in I²C specification 2.0.

In I²C mode, the control terminals are changed as follows.

TERMINAL NAME	TDMCA NAME	PROPERTY	DESCRIPTION
$\overline{MS}$	ADR0	Input	I²C address 0
MUTE	ADR1	Input	I²C address 1
MC	SCL	Input	I²C clock
MDI	SDA	Input/output	I²C data

Slave Address

MSB							LSB
1	0	0	1	1	ADR1	ADR0	R/$\overline{W}$

The PCM1791A has 7 bits for its own slave address. The first five bits (MSBs) of the slave address are factory preset to 10011. The next two bits of the address byte are the device select bits, which can be user-defined by the ADR1 and ADR0 terminals. A maximum of four PCM1791As can be connected on the same bus at one time. Each PCM1791A responds when it receives its own slave address.

Packet Protocol

A master device must control packet protocol, which consists of start condition, slave address, read/write bit, data if write or acknowledge if read, and stop condition. The PCM1791A supports only slave receivers and slave transmitters.

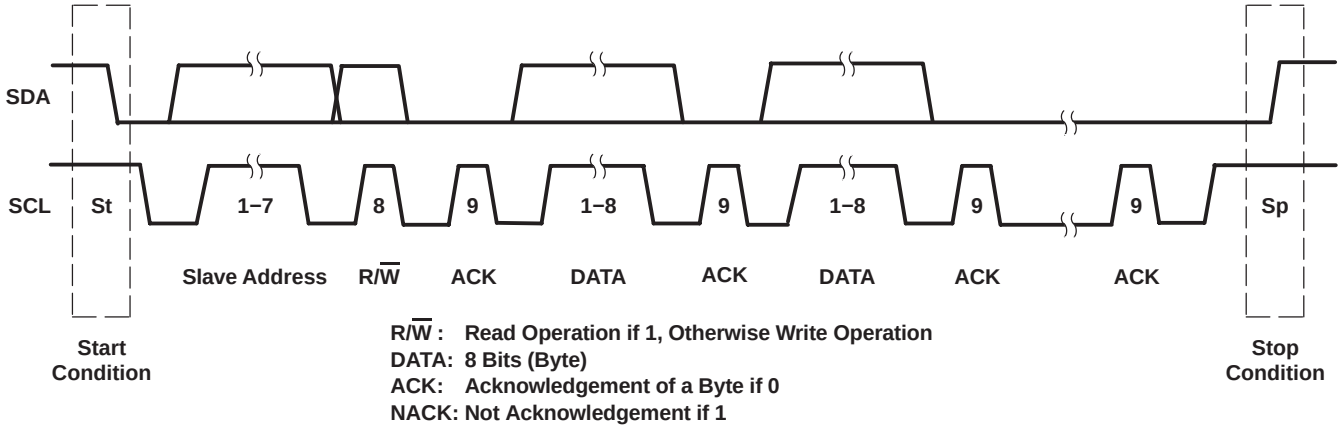

Write operation

Transmitter	*M*	*M*	*M*	*S*	*M*	*S*	*M*	*S*	…	*S*	*M*
Data Type	St	Slave address	$\overline{W}$	ACK	DATA	ACK	DATA	ACK	…	ACK	Sp

Read operation

Transmitter	*M*	*M*	*M*	*S*	*S*	*M*	*S*	*M*	…	*M*	*M*
Data Type	St	Slave address	R	ACK	DATA	ACK	DATA	ACK	…	NACK	Sp

NOTE: M: Master device S: Slave device St: Start condition
Sp: Stop condition $\overline{W}$: Write R: Read

Figure 32. Basic I²C Framework

Write Register

A master can write to any PCM1791A registers using single or multiple accesses. The master sends a PCM1791A slave address with a write bit, a register address, and the data. If multiple access is required, the address is that of the starting register, followed by the data to be transferred. When the data are received properly, the index register is incremented automatically by 1. When the index register reaches 0x7F, the next value is 0x0. When undefined registers are accessed, the PCM1791A does not send an acknowledgement. Figure 33 is a diagram of the write operation.

Transmitter	*M*	*M*	*M*	*S*	*M*	*S*	*M*	*S*	*M*	*S*	…	*S*	*M*
Data Type	St	Slave address	$\overline{W}$	ACK	Register address	ACK	Write data 1	ACK	Write data 2	ACK	…	ACK	Sp

M: Master device *S*: Slave device St: Start condition
ACK: Acknowledge Sp: Stop condition $\overline{W}$: Write

Figure 33. Write Operation

Read Register

A master can read the PCM1791A register. The value of the register address is stored in an indirect index register in advance. The master sends a PCM1791A slave address with a read bit after storing the register address. Then the PCM1791A transfers the data which the index register points to. When the data are transferred during a multiple access, the index register is incremented by 1 automatically. (When first going into read mode immediately following a write, the index register is not incremented. The master can read the register that was previously written.) When the index register reaches 0x7F, the next value is 0x0. The PCM1791A outputs some data when the index register is 0x10 to 0x1F, even if it is not defined in Table 4. Figure 34 is a diagram of the read operation.

Transmitter	*M*	*M*	*M*	*S*	*M*	*S*	*M*	*M*	*M*	*S*	*S*	*M*	…	*M*	*M*
Data Type	St	Slave address	$\overline{W}$	ACK	Register address	ACK	Sr	Slave address	R	ACK	Data	ACK	…	NACK	Sp

M: Master device *S*: Slave device St: Start condition Sr: Repeated start condition
ACK: Acknowledge Sp: Stop condition NACK: Not Acknowledge $\overline{W}$: Write R: Read

NOTE: The slave address after the repeat start condition must be the same as the previous slave address.

Figure 34. Read Operation

Noise Suppression

The PCM1791A incorporates noise suppression using the system clock (SCK). However, there must be no more than two noise spikes in 600 ns. The noise suppression works for SCK frequencies between 8 MHz and 40 MHz in fast mode. However, it works incorrectly in the particular following conditions.

Case 1:

1. $t_{(SCK)} > 120$ ns ($t_{(SCK)}$: period of SCK)
2. $t_{(HI)} + t_{(D-HD)} < t_{(SCK)} \times 5$
3. Spike noise exists on the first half of the SCL HIGH pulse.
4. Spike noise exists on the SDA HIGH pulse just before SDA goes LOW.

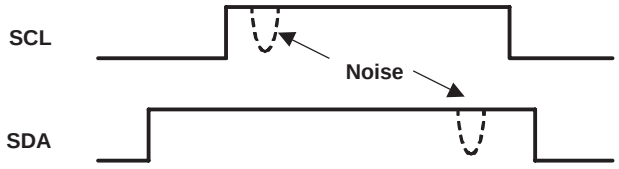

When these conditions occur at the same time, the data is recognized as LOW.

Case 2:

1. $t_{(SCK)} > 120$ ns
2. $t_{(S-HD)}$ or $t_{(RS-HD)} < t_{(SCK)} \times 5$
3. Spike noise exists on both SCL and SDA during the hold time.

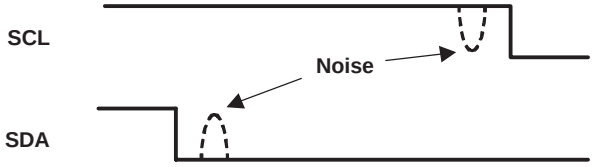

When these conditions occur at the same time, the PCM1791A fails to detect a start condition.

Case 3:

1. $t_{(SCK)} < 50$ ns
2. $t_{(SP)} > t_{(SCK)}$
3. Spike noise exists on SCL just after SCL goes LOW.
4. Spike noise exists on SDA just before SCL goes LOW.

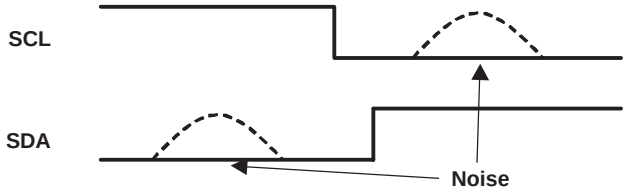

When these conditions occur at the same time, the PCM1791A erroneously detects a start or stop condition.

TIMING DIAGRAM

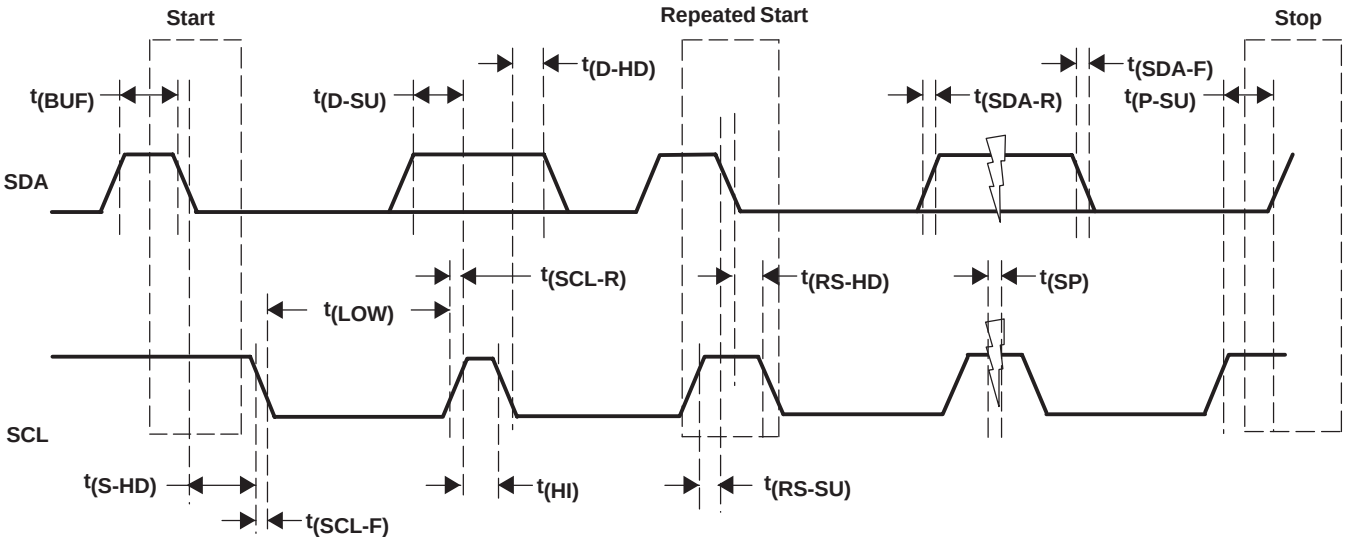

TIMING CHARACTERISTICS

PARAMETER		CONDITIONS	MIN	MAX	UNIT
$f_{(SCL)}$	SCL clock frequency	Standard		100	kHz
		Fast		400	
$t_{(BUF)}$	Bus free time between stop and start conditions	Standard	4.7		µs
		Fast	1.3		
$t_{(LOW)}$	Low period of the SCL clock	Standard	4.7		µs
		Fast	1.3		
$t_{(HI)}$	High period of the SCL clock	Standard	4		µs
		Fast	600		ns
$t_{(RS-SU)}$	Setup time for (repeated) start condition	Standard	4.7		µs
		Fast	600		ns
$t_{(S-HD)}$	Hold time for (repeated) start condition	Standard	4		µs
$t_{(RS-HD)}$		Fast	600		ns
$t_{(D-SU)}$	Data setup time	Standard	250		ns
		Fast	100		
$t_{(D-HD)}$	Data hold time	Standard	0	900	ns
		Fast	0	900	
$t_{(SCL-R)}$	Rise time of SCL signal	Standard	20 + 0.1 C_B	1000	ns
		Fast	20 + 0.1 C_B	300	
$t_{(SCL-R1)}$	Rise time of SCL signal after a repeated start condition and after an acknowledge bit	Standard	20 + 0.1 C_B	1000	ns
		Fast	20 + 0.1 C_B	300	
$t_{(SCL-F)}$	Fall time of SCL signal	Standard	20 + 0.1 C_B	1000	ns
		Fast	20 + 0.1 C_B	300	
$t_{(SDA-R)}$	Rise time of SDA signal	Standard	20 + 0.1 C_B	1000	ns
		Fast	20 + 0.1 C_B	300	
$t_{(SDA-F)}$	Fall time of SDA signal	Standard	20 + 0.1 C_B	1000	ns
		Fast	20 + 0.1 C_B	300	
$t_{(P-SU)}$	Setup time for stop condition	Standard	4		µs
		Fast	600		ns
$C_{(B)}$	Capacitive load for SDA and SCL lines			400	pF
$t_{(SP)}$	Pulse duration of suppressed spike	Fast		50	ns
V_{NH}	Noise margin at high level for each connected device (including hysteresis)		0.2 V_{DD}		V

MODE CONTROL REGISTERS

User-Programmable Mode Controls

The PCM1791A includes a number of user-programmable functions which are accessed via mode control registers. The registers are programmed using the serial control interface, which was previously discussed in this data sheet. Table 3 lists the available mode-control functions, along with their default reset conditions and associated register index.

Table 3. User-Programmable Function Controls

FUNCTION	DEFAULT	REGISTER	BIT	PCM	DSD	DF BYPASS
Digital attenuation control 0 dB to –120 dB and mute, 0.5 dB/step	0 dB	Register 16 Register 17	ATL[7:0] (for L-ch) ATR[7:0] (for R-ch)	yes		
Attenuation load control Disabled, enabled	Attenuation disabled	Register 18	ATLD	yes		
Input audio data format selection 16-, 20-, 24-bit standard (right-justified) format 24-bit MSB-first left-justified format 16-/24-bit I^2S format	24-bit I^2S format	Register 18	FMT[2:0]	yes		yes
Sampling rate selection for de-emphasis Disabled, 44.1 kHz, 48 kHz, 32 kHz	De-emphasis disabled	Register 18	DMF[1:0]	yes	yes(1)	
De-emphasis control Disabled, enabled	De-emphasis disabled	Register 18	DME	yes		
Soft mute control Mute disabled, enabled	Mute disabled	Register 18	MUTE	yes		
Output phase reversal Normal, reverse	Normal	Register 19	REV	yes	yes	yes
Attenuation speed selection $\times 1\ f_S$, $\times(1/2)f_S$, $\times(1/4)f_S$, $\times(1/8)f_S$	$\times 1\ f_S$	Register 19	ATS[1:0]	yes		
DAC operation control Enabled, disabled	DAC operation enabled	Register 19	OPE	yes	yes	yes
Digital filter rolloff selection Sharp rolloff, slow rolloff	Sharp rolloff	Register 19	FLT	yes		
Infinite zero mute control Disabled, enabled	Disabled	Register 19	INZD	yes		yes
System reset control Reset operation , normal operation	Normal operation	Register 20	SRST	yes	yes	yes
DSD interface mode control DSD enabled, disabled	Disabled	Register 20	DSD	yes	yes	
Digital-filter bypass control DF enabled, DF bypass	DF enabled	Register 20	DFTH	yes		yes
Monaural mode selection Stereo, monaural	Stereo	Register 20	MONO	yes	yes	yes
Channel selection for monaural mode data L-channel, R-channel	L-channel	Register 20	CHSL	yes	yes	yes
Delta-sigma oversampling rate selection $\times 64\ f_S$, $\times 128\ f_S$, $\times 32\ f_S$	$\times 64\ f_S$	Register 20	OS[1:0]	yes	yes(2)	yes
PCM zero output enable	Enabled	Register 21	PCMZ	yes		yes
DSD zero output enable	Disabled	Register 21	DZ[1:0]		yes	
Function Available Only for Read						
Zero detection flag Not zero, zero detected	Not zero = 0 Zero detected = 1	Register 22	ZFGL (for L-ch) ZFGR (for R-ch)	yes	yes	yes
Device ID (at TDMCA)	–	Register 23	ID[4:0]	yes		

(1) When in DSD mode, DMF[1:0] is defined as DSD filter (analog FIR) performance selection.
(2) When in DSD mode, OS[1:0] is defined as DSD filter (analog FIR) operation rate selection.

Register Map

The mode control register map is shown in Table 4. Registers 16–21 include an R/$\overline{W}$ bit, which determines whether a register read (R/$\overline{W}$ = 1) or write (R/$\overline{W}$ = 0) operation is performed. Registers 22 and 23 are read-only.

Table 4. Mode Control Register Map

	B15	B14	B13	B12	B11	B10	B9	B8	B7	B6	B5	B4	B3	B2	B1	B0
Register 16	R/$\overline{W}$	0	0	1	0	0	0	0	ATL7	ATL6	ATL5	ATL4	ATL3	ATL2	ATL1	ATL0
Register 17	R/$\overline{W}$	0	0	1	0	0	0	1	ATR7	ATR6	ATR5	ATR4	ATR3	ATR2	ATR1	ATR0
Register 18	R/$\overline{W}$	0	0	1	0	0	1	0	ATLD	FMT2	FMT1	FMT0	DMF1	DMF0	DME	MUTE
Register 19	R/$\overline{W}$	0	0	1	0	0	1	1	REV	ATS1	ATS0	OPE	RSV	RSV	FLT	INZD
Register 20	R/$\overline{W}$	0	0	1	0	1	0	0	RSV	SRST	DSD	DFTH	MONO	CHSL	OS1	OS0
Register 21	R/$\overline{W}$	0	0	1	0	1	0	1	RSV	RSV	RSV	RSV	RSV	DZ1	DZ0	PCMZ
Register 22	R	0	0	1	0	1	1	0	RSV	RSV	RSV	RSV	RSV	RSV	ZFGR	ZFGL
Register 23	R	0	0	1	0	1	1	1	RSV	RSV	RSV	ID4	ID3	ID2	ID1	ID0

Register Definitions

	B15	B14	B13	B12	B11	B10	B9	B8	B7	B6	B5	B4	B3	B2	B1	B0
Register 16	R/$\overline{W}$	0	0	1	0	0	0	0	ATL7	ATL6	ATL5	ATL4	ATL3	ATL2	ATL1	ATL0
Register 17	R/$\overline{W}$	0	0	1	0	0	0	1	ATR7	ATR6	ATR5	ATR4	ATR3	ATR2	ATR1	ATR0

R/$\overline{W}$: Read/Write Mode Select

When R/$\overline{W}$ = 0, a write operaton is performed.
When R/$\overline{W}$ = 1, a read operaton is performed.
Default value: 0

ATx[7:0]: Digital Attenuation Level Setting

These bits are available for read and write.
Default value: 1111 1111b

Each DAC output has a digital attenuator associated with it. The attenuator can be set from 0 dB to –120 dB, in 0.5-dB steps. Alternatively, the attenuator can be set to infinite attenuation (or mute).

The attenuation data for each channel can be set individually. However, the data load control (the ATLD bit of control register 18) is common to both attenuators. ATLD must be set to 1 in order to change an attenuator setting. The attenuation level can be set using the following formula:

$$\text{Attenuation level (dB)} = 0.5\text{ dB} \bullet (\text{ATx}[7:0]_{DEC} - 255)$$

where $\text{ATx}[7:0]_{DEC}$ = 0 through 255

For $\text{ATx}[7:0]_{DEC}$ = 0 through 14, the attenuator is set to infinite attenuation. The following table shows attenuation levels for various settings:

ATx[7:0]	Decimal Value	Attenuation Level Setting
1111 1111b	255	0 dB, no attenuation (default)
1111 1110b	254	–0.5 dB
1111 1101b	253	–1.0 dB
⋮	⋮	⋮
0001 0000b	16	–119.5 dB
0000 1111b	15	–120.0 dB
0000 1110b	14	Mute
⋮	⋮	⋮
0000 0000b	0	Mute

	B15	B14	B13	B12	B11	B10	B9	B8	B7	B6	B5	B4	B3	B2	B1	B0
Register 18	R/$\overline{W}$	0	0	1	0	0	1	0	ATLD	FMT2	FMT1	FMT0	DMF1	DMF0	DME	MUTE

R/$\overline{W}$: Read/Write Mode Select

When R/$\overline{W}$ = 0, a write operaton is performed.
When R/$\overline{W}$ = 1, a read operaton is performed.
Default value: 0

ATLD: Attenuation Load Control

This bit is available for read and write.
Default value: 0

ATLD = 0	Attenuation control disabled (default)
ATLD = 1	Attenuation control enabled

The ATLD bit enables loading of the attenuation data contained in registers 16 and 17. When ATLD = 0, the attenuation settings remain at the previously programmed levels, ignoring new data loaded from registers 16 and 17. When ATLD = 1, attenuation data written to registers 16 and 17 is loaded normally.

FMT[2:0]: Audio Interface Data Format

These bits are available for read and write.
Default value: 101

FMT[2:0]	Audio Data Format Selection
000	16-bit standard format, right-justified data
001	20-bit standard format, right-justified data
010	24-bit standard format, right-justified data
011	24-bit MSB-first, left-justified format data
100	16-bit I^2S format data
101	24-bit I^2S format data (default)
110	Reserved
111	Reserved

The FMT[2:0] bits select the data format for the serial audio interface.

For the external digital filter interface mode (DFTH mode), this register is operated as shown in the *APPLICATION FOR EXTERNAL DIGITAL FILTER INTERFACE* section of this data sheet.

DMF[1:0]: Sampling Frequency Selection for the De-Emphasis Function

These bits are available for read and write.
Default value: 00

DMF[1:0]	De-Emphasis Sampling Frequency Selection
00	Disabled (default)
01	48 kHz
10	44.1 kHz
11	32 kHz

The DMF[1:0] bits select the sampling frequency used by the digital de-emphasis function when it is enabled by setting the DME bit. The de-emphasis curves are shown in the *TYPICAL PERFORMANCE CURVES* section of this data sheet.

For the DSD mode, analog FIR filter performance can be selected using this register. A register map and filter response plots are shown in the *APPLICATION FOR DSD FORMAT (DSD MODE) INTERFACE* section of this data sheet.

DME: Digital De-Emphasis Control

This bit is available for read and write.
Default value: 0

DME = 0	De-emphasis disabled (default)
DME = 1	De-emphasis enabled

The DME bit enables or disables the de-emphasis function for both channels.

MUTE: Soft Mute Control

This bit is available for read and write.
Default value: 0

MUTE = 0	MUTE disabled (default)
MUTE = 1	MUTE enabled

The MUTE bit enables or disables the soft mute function for both channels.

Soft mute is operated as a 256-step attenuator. The speed for each step to −∞ dB (mute) is determined by the attenuation rate selected in the ATS register.

	B15	B14	B13	B12	B11	B10	B9	B8	B7	B6	B5	B4	B3	B2	B1	B0
Register 19	R/$\overline{W}$	0	0	1	0	0	1	1	REV	ATS1	ATS0	OPE	RSV	RSV	FLT	INZD

R/$\overline{W}$: Read/Write Mode Select

When R/$\overline{W}$ = 0, a write operaton is performed.
When R/$\overline{W}$ = 1, a read operaton is performed.
Default value: 0

REV: Output Phase Reversal

This bit is available for read and write.
Default value: 0

REV = 0	Normal output (default)
REV = 1	Inverted output

The REV bit inverts the output phase for both channels.

ATS[1:0]: Attenuation Rate Select

These bits are available for read and write.
Default value: 00

ATS[1:0]	Attenuation Rate Selection
00	Every LRCK (default)
01	LRCK/2
10	LRCK/4
11	LRCK/8

The ATS[1:0] bits select the rate at which the attenuator is decremented/incremented during level transitions.

OPE: DAC Operation Control

This bit is available for read and write.
Default value: 0

OPE = 0	DAC operation enabled (default)
OPE = 1	DAC operation disabled

The OPE bit enables or disables the analog output for both channels. Disabling the analog outputs forces them to the bipolar zero level (BPZ) even if digital audio data is present on the input.

FLT: Digital Filter Rolloff Control

This bit is available for read and write.
Default value: 0

FLT = 0	Sharp rolloff (default)
FLT = 1	Slow rolloff

The FLT bit selects the digital filter rolloff characteristic. The filter responses for these selections are shown in the *TYPICAL PERFORMANCE CURVES* section of this data sheet.

INZD: Infinite Zero Detect Mute Control

This bit is available for read and write.
Default value: 0

INZD = 0	Infinite zero detect mute disabled (default)
INZD = 1	Infinite zero detect mute enabled

The INZD bit enables or disables the zero detect mute function. Setting INZD to 1 forces muted analog outputs to hold a bipolar zero level when the PCM1791A detects a zero condition in both channels. The infinite zero detect mute function is not available in the DSD mode.

	B15	B14	B13	B12	B11	B10	B9	B8	B7	B6	B5	B4	B3	B2	B1	B0
Register 20	R/$\overline{W}$	0	0	1	0	1	0	0	RSV	SRST	DSD	DFTH	MONO	CHSL	OS1	OS0

R/$\overline{W}$: Read/Write Mode Select

When R/$\overline{W}$ = 0, a write operaton is performed.
When R/$\overline{W}$ = 1, a read operaton is performed.
Default value: 0

SRST: System Reset Control

This bit is available for write only.
Default value: 0

SRST = 0	Normal operation (default)
SRST = 1	System reset operation (generate one reset pulse)

The SRST bit resets the PCM1791A to the initial system condition.

DSD: DSD Interface Mode Control

This bit is available for read and write.
Default value: 0

DSD = 0	DSD interface mode disabled (default)
DSD = 1	DSD interface mode enabled

The DSD bit enables or disables the DSD interface mode.

DFTH: Digital Filter Bypass (or Through Mode) Control

This bit is available for read and write.
Default value: 0

DFTH = 0	Digital filter enabled (default)
DFTH = 1	Digital filter bypassed for the external digital filter

The DFTH bit enables or disables the external digital filter interface mode.

MONO: Monaural Mode Selection

This bit is available for read and write.
Default value: 0

MONO = 0	Stereo mode (default)
MONO = 1	Monaural mode

The MONO function changes operation mode from the normal stereo mode to the monaural mode. When the monaural mode is selected, both DACs operate in a balanced mode for one channel of audio input data. Channel selection is available for L-channel or R-channel data, determined by the setting of the CHSL bit as described immediately following.

CHSL: Channel Selection for Monaural Mode

This bit is available for read and write.
Default value: 0

CHSL = 0	L-channel selected (default)
CHSL = 1	R-channel selected

This bit is available when MONO = 1.

The CHSL bit selects L-channel or R-channel data to be used in monaural mode. In the DSD mono mode, DATA (pin 3) is used for the input data.

OS[1:0]: Delta-Sigma Oversampling Rate Selection

These bits are available for read and write.
Default value: 00

OS[1:0]	Operation Speed Select
00	64 times f_S (default)
01	32 times f_S
10	128 times f_S
11	Reserved

The OS bits change the oversampling rate of delta-sigma modulation. Use of this function enables the designer to stabilize the conditions at the post low-pass filter for different sampling rates. As an application example, programming to set 128 times in 44.1-kHz operation, 64 times in 96-kHz operation, and 32 times in 192-kHz operation allows the use of only a single type (cutoff frequency) of post low-pass filter. The 128 f_S oversampling rate is not available at sampling rates above 100 kHz. If the 128-f_S oversampling rate is selected, a system clock of more than 256 f_S is required.

In DSD mode, these bits select the speed of the bit clock for DSD data coming into the analog FIR filter.

	B15	B14	B13	B12	B11	B10	B9	B8	B7	B6	B5	B4	B3	B2	B1	B0
Register 21	R/$\overline{W}$	0	0	1	0	1	0	1	RSV	RSV	RSV	RSV	RSV	DZ1	DZ0	PCMZ

R/$\overline{W}$: Read/Write Mode Select

When R/$\overline{W}$ = 0, a write operaton is performed.
When R/$\overline{W}$ = 1, a read operaton is performed.
Default value: 0

DZ[1:0]: DSD Zero Output Enable

These bits are available for read and write.
Default value: 00

DZ[1:0]	Zero Output Enable
00	Disabled (default)
01	Even pattern detect
1x	96_H pattern detect

The DZ bits enable or disable the output zero flags, and select the zero pattern in the DSD mode.

PCMZ: PCM Zero Output Enable

This bit is available for read and write.
Default value: 1

PCMZ = 0	PCM zero output disabled
PCMZ = 1	PCM zero output enabled (default)

The PCMZ bit enables or disables the output zero flags in the PCM mode and the external DF mode.

	B15	B14	B13	B12	B11	B10	B9	B8	B7	B6	B5	B4	B3	B2	B1	B0
Register 22	R	0	0	1	0	1	1	0	RSV	RSV	RSV	RSV	RSV	RSV	ZFGR	ZFGL

R: Read Mode Select

Value is always 1, specifying the readback mode.

ZFGx: Zero-Detection Flag

where x = L or R, corresponding to the DAC output channel. These bits are available only for readback.

Default value: 00

ZFGx = 0	Not zero
ZFGx = 1	Zero detected

These bits show zero conditions. Their status is the same as that of the zero flags at ZEROL (pin 23) and ZEROR (pin 22). See *Zero Detect* in the *FUNCTION DESCRIPTIONS* section.

	B15	B14	B13	B12	B11	B10	B9	B8	B7	B6	B5	B4	B3	B2	B1	B0
Register 23	R	0	0	1	0	1	1	1	RSV	RSV	RSV	ID4	ID3	ID2	ID1	ID0

R: Read Mode Select

Value is always 1, specifying the readback mode.

ID[4:0]: Device ID

The ID[4:0] bits hold a device ID in the TDMCA mode.

TYPICAL CONNECTION DIAGRAM IN PCM MODE

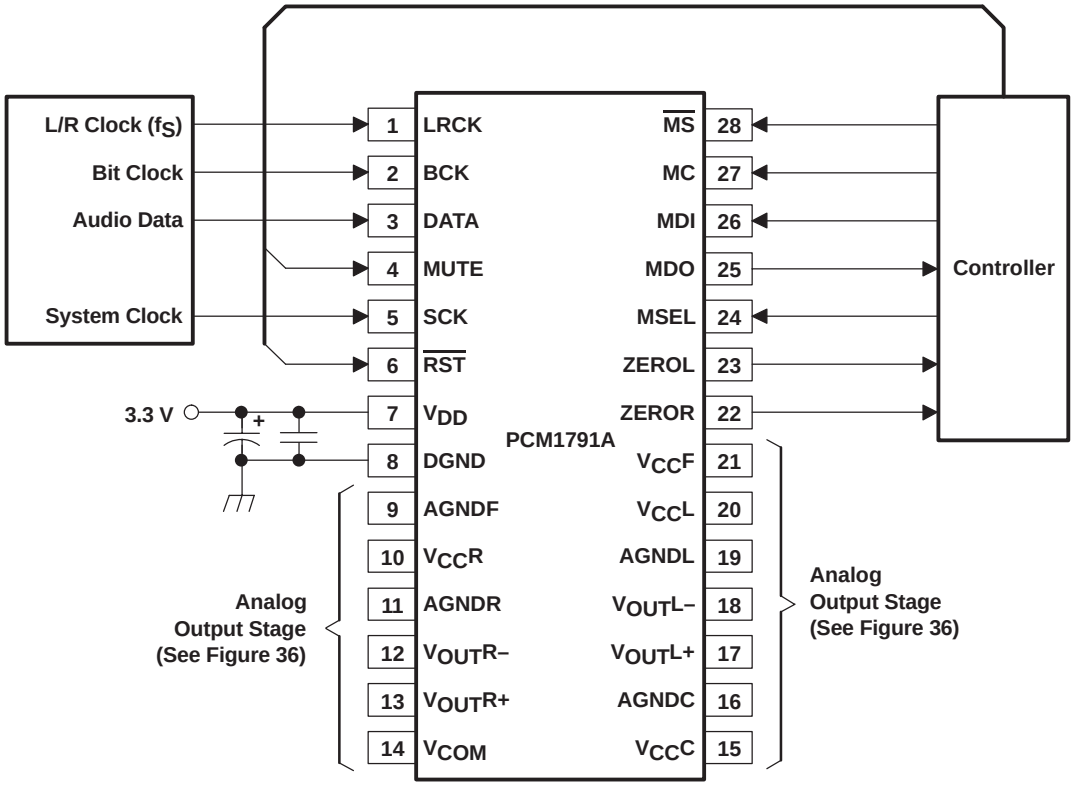

Figure 35. Typical Application Circuit for Standard PCM Audio Operation

APPLICATION INFORMATION

ANALOG OUTPUTS

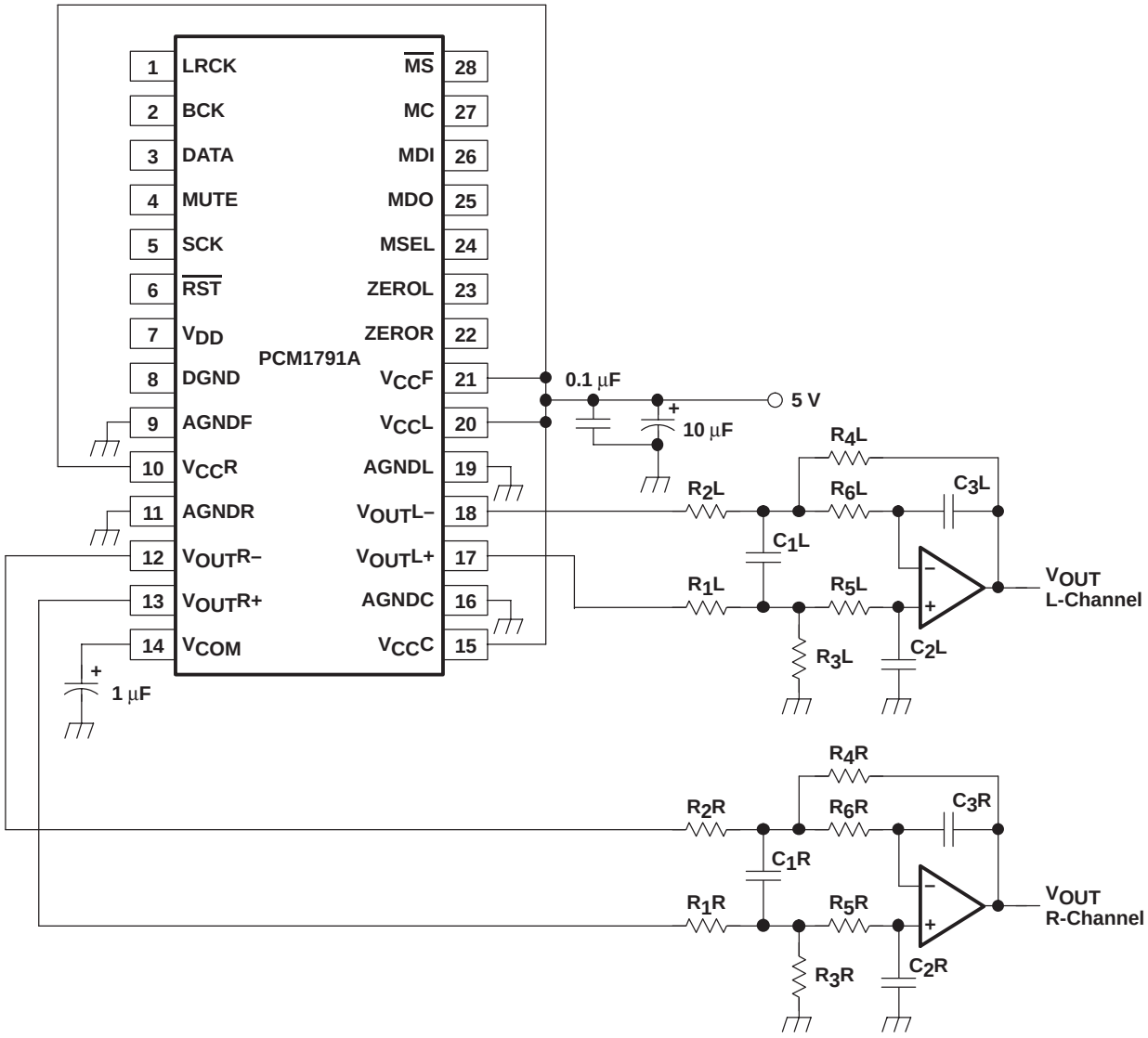

NOTE: Example R and C values for f_C = 77 kHz – R_1, R_2: 1.8 kΩ, R_3,R_4: 3.3 kΩ, R_5,R_6: 680 Ω, C_1: 1800 pF, C_2, C_3: 560 pF.

Figure 36. Typical Application for Analog Output Stage

Analog Output Level and LPF

The signal level of the DAC differential-voltage output {(V_{OUT}L+)–(V_{OUT}L–), (V_{OUT}R+)–(V_{OUT}R–)} is 3.2 Vp-p at 0 dB (full scale). The voltage output of the LPF is given by following equation:

V_{OUT} = 3.2 Vp-p × (R_f /R_i)

Here, R_f is the feedback resistor in the LPF, and R_3 = R_4 in a typical application circuit. R_i is the input resistor in the LPF, and R_1 = R_2 in a typical application circuit.

Operational Amplifier for LPF

An OPA2134 or 5532 type operational amplifier is recommended for the LPF circuit to obtain the specified audio performance. Dynamic performance such as gain bandwidth, settling time, and slew rate of the operational amplifier largely determines the audio dynamic performance of the LPF section. The input noise specification of the operational amplifier should be considered to obtain a 113-dB S/N ratio.

Analog Gain of Balanced Amplifier

The DAC voltage outputs are followed by balanced amplifier stages, which sum the differential signals for each channel, creating a single-ended voltage output. In addition, the balanced amplifiers provide a third-order low-pass filter function, which band limits the audio output signal. The cutoff frequency and gain are determined by external R and C component values. In this case, the cutoff frequency is 77 kHz with a gain of 1.83. The output voltage for each channel is 5.9 Vp-p, or 2.1 V rms.

Application for Monaural-Mode Operation

A single-channel signal from the stereo audio data input is output from both $V_{OUT}L$ and $V_{OUT}R$ as a differential output. The channel to be output is selected by setting the CHSL bit in register 20. The advantage of monaural operation is to provide over 115 dB of dynamic range for high-end audio applications.

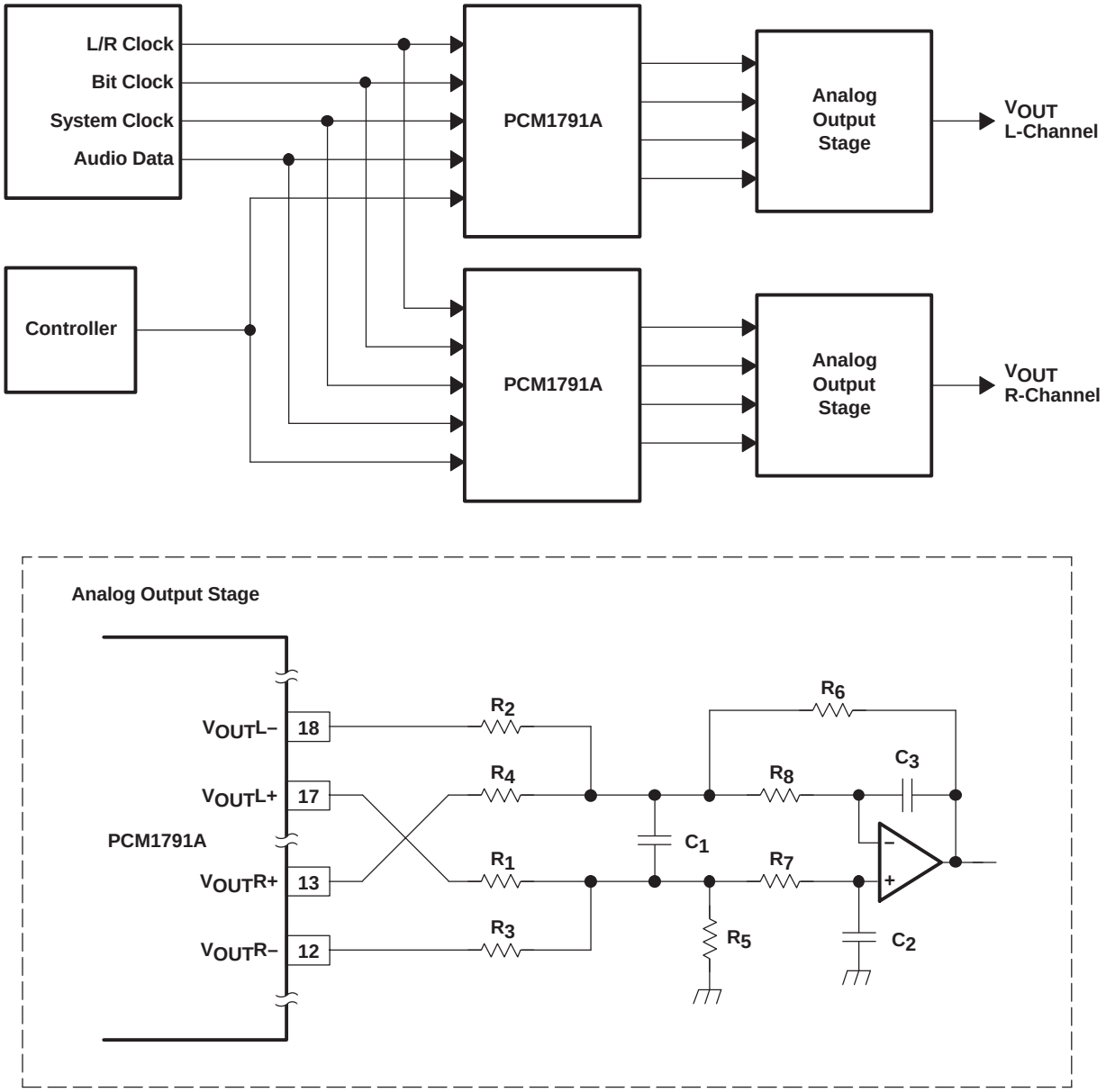

NOTE: Example R and C values for f_C = 77 kHz, R1–R4: 3.6 kΩ, R5, R6: 3.3 kΩ, R7, R8: 680 Ω, C1: 1800 pF, C2, C3: 560 pF.

Figure 37. Connection Diagram for Monaural Mode Interface

APPLICATION FOR EXTERNAL DIGITAL FILTER INTERFACE

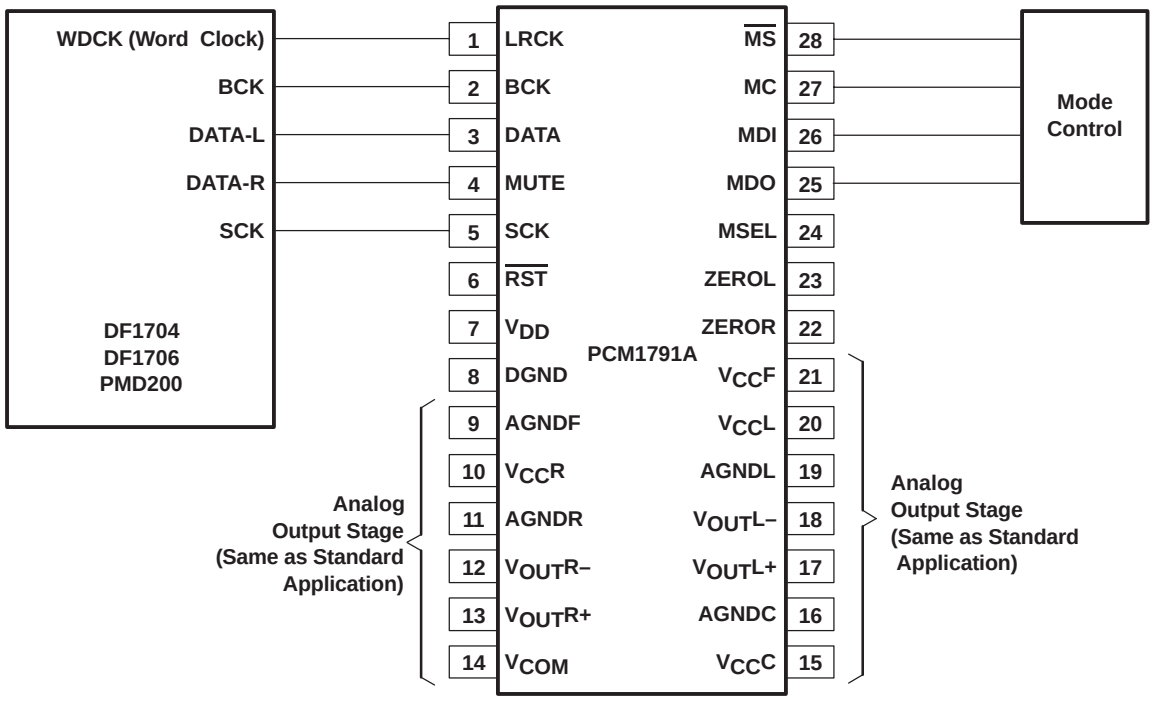

Figure 38. Connection Diagram for External DIgital Filter (Internal DF Bypass Mode) Application

Application for Interfacing With an External Digital Filter

For some applications, it may be desirable to use an external digital filter to perform the interpolation function, as it can provide improved stop-band attenuation when compared to the internal digital filter of the PCM1791A.

The PCM1791A supports several external digital filters, including:

- Texas Instruments DF1704 and DF1706
- Pacific Microsonics PMD200 HDCD filter/decoder IC
- Programmable digital signal processors

The external digital filter application mode is accessed by programming the following bit in the corresponding control register:

- DFTH = 1 (register 20)

The pins used to provide the serial interface for the external digital filter are shown in the connection diagram of Figure 38. The word clock (WDCK) signals must be operated at 8× or 4× the desired sampling frequency, f_S.

Pin Assignments When Using the External Digital Filter Interface

- LRCK (pin 1): WDCK as word clock input
- BCK (pin 2): BCK as bit clock for audio data
- DATA (pin 3): DATAL as L-channel audio data input
- MUTE (pin 4): DATAR as R-channel audio data input

Audio Format

The PCM1791A in the external digital filter interface mode supports right-justified audio formats including 16-bit, 20-bit, and 24-bit audio data, as shown in Figure 39. The audio format is selected by the FMT[2:0] bits of control register 18.

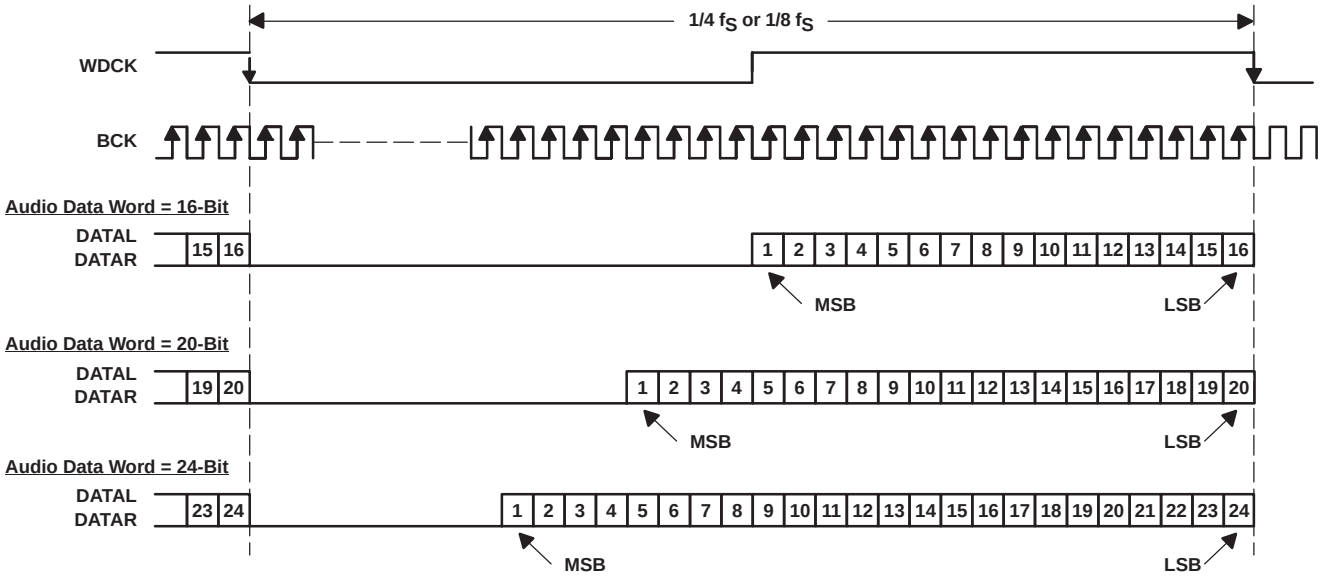

Figure 39. Audio Data Input Format for External Digital Filter (Internal DF Bypass Mode) Application

System Clock (SCK) and Interface Timing

The PCM1791A in an application using an external digital filter requires the synchronization of WDCK and the system clock. The system clock is phase-free with respect to WDCK. Interface timing among WDCK, BCK, DATAL, and DATAR is shown in Figure 40.

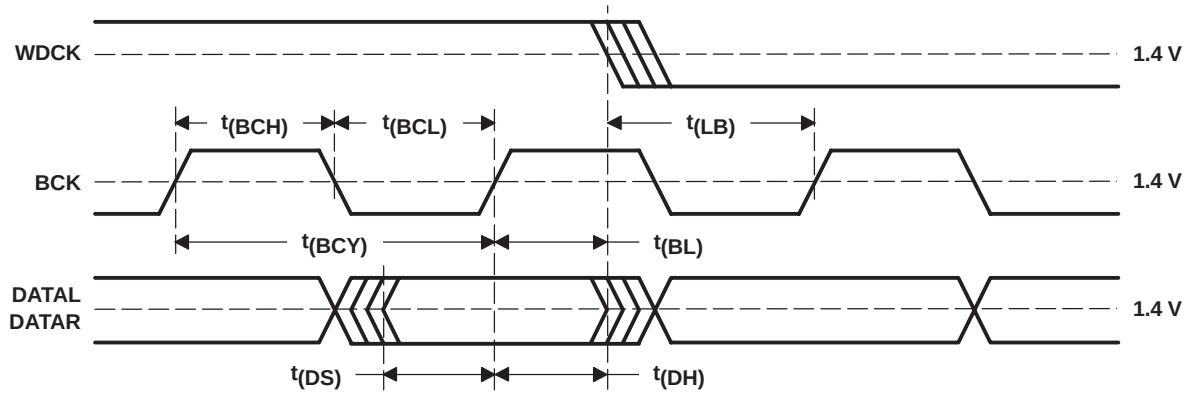

PARAMETER		MIN	MAX	UNITS
$t_{(BCY)}$	BCK pulse cycle time	20		ns
$t_{(BCL)}$	BCK pulse duration, LOW	7		ns
$t_{(BCH)}$	BCK pulse duration, HIGH	7		ns
$t_{(BL)}$	BCK rising edge to WDCK falling edge	5		ns
$t_{(LB)}$	WDCK falling edge to BCK rising edge	5		ns
$t_{(DS)}$	DATAL, DATAR setup time	5		ns
$t_{(DH)}$	DATAL, DATAR hold time	5		ns

Figure 40. Audio Interface Timing for External Digital Filter (Internal DF Bypass Mode) Application

Functions Available in the External Digital Filter Mode

The external digital filter mode allows access to the majority of the PCM1791A mode control functions.

The following table shows the register mapping available when the external digital filter mode is selected, along with descriptions of functions which are modified when using this mode selection.

	B15	B14	B13	B12	B11	B10	B9	B8	B7	B6	B5	B4	B3	B2	B1	B0
Register 16	R/$\overline{W}$	0	0	1	0	0	0	0	−	−	−	−	−	−	−	−
Register 17	R/$\overline{W}$	0	0	1	0	0	0	1	−	−	−	−	−	−	−	−
Register 18	R/$\overline{W}$	0	0	1	0	0	1	0	−	FMT2	FMT1	FMT0	−	−	−	−
Register 19	R/$\overline{W}$	0	0	1	0	0	1	1	REV	−	−	OPE	−	−	−	INZD
Register 20	R/$\overline{W}$	0	0	1	0	1	0	0	−	SRST	0	1	MONO	CHSL	OS1	OS0
Register 21	R/$\overline{W}$	0	0	1	0	1	0	1	−	−	−	−	−	−	−	PCMZ
Register 22	R	0	0	1	0	1	1	0	−	−	−	−	−	−	ZFGR	ZFGL

NOTE: −: Function is disabled. No operation even if data bit is set

FMT[2:0]: Audio Data Format Selection

Default value: 000

FMT[2:0]	Audio Data Format Select
000	16-bit right-justified format (default)
001	20-bit right-justified format
010	24-bit right-justified format
Other	N/A

OS[1:0]: Delta-Sigma Modulator Oversampling Rate Selection

Default value: 00

OS[1:0]	Operation Speed Select
00	8 times WDCK (default)
01	4 times WDCK
10	16 times WDCK
11	Reserved

The effective oversampling rate is determined by the oversampling performed by both the external digital filter and the delta-sigma modulator. For example, if the external digital filter is 8× oversampling, and the user selects OS[1:0] = 00, then the delta-sigma modulator oversamples by 8×, resulting in an effective oversampling rate of 64×. The 16× WDCK oversampling rate is not available above a 100-kHz sampling rate. If the oversampling rate selected is 16× WDCK, the system clock frequency must be over 256 f_S.

APPLICATION FOR DSD FORMAT (DSD MODE) INTERFACE

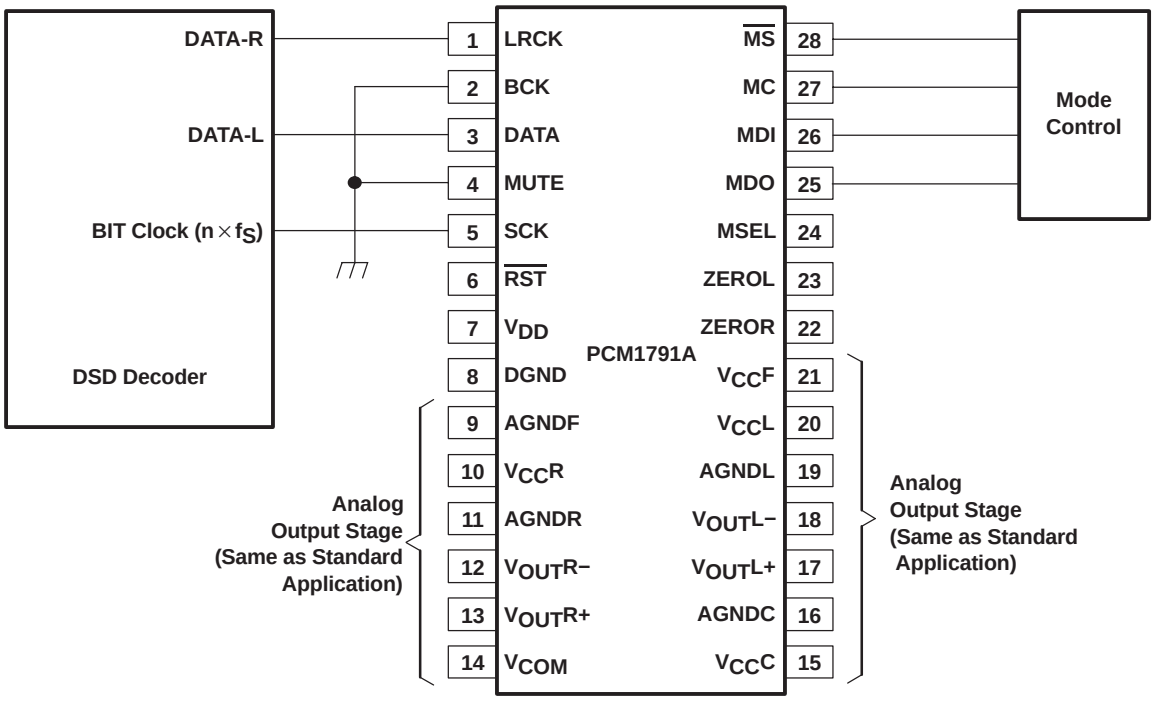

Figure 41. Connection Diagram in DSD Mode

Feature

This mode is used for interfacing directly to a DSD decoder, which is found in Super Audio CD™ (SACD) applications.

The DSD mode is available by programming the following bit in the corresponding control register:

- DSD = 1 (register 20)

The DSD mode provides a low-pass filtering function. The filtering is provided using an analog FIR filter structure. Four FIR responses are available, and are selected by the DMF[1:0] bits of control register 18.

The DSD bit must be set before inputting DSD data; otherwise, the PCM1791A erroneously detects the TDMCA mode, and commands are not accepted through the serial control interface.

Super Audio CD is a trademark of Sony Kabushiki Kaisha TA Sony Corporation, Japan.

Pin Assignments When Using the DSD Format Interface

Several pins are redefined for DSD mode operation. These include:

- DATA (pin 3): DSDL as L-channel DSD data input, or as DSD data input in mono mode
- LRCK (pin 1): DSDR as R-channel DSD data input
- SCK (pin 5): DBCK as bit clock for DSD data
- BCK (pin 2): Set LOW (N/A)

Requirements for System Clock

The bit clock (DBCK) for DSD mode is required at pin 5 of the PCM1791A. The frequency of bit clock may be N times the sampling frequency. Generally, N is 64 in DSD applications.

The interface timing between the bit clock and DSDL, DSDR is required to meet the setup and hold time specifications shown in Figure 43.

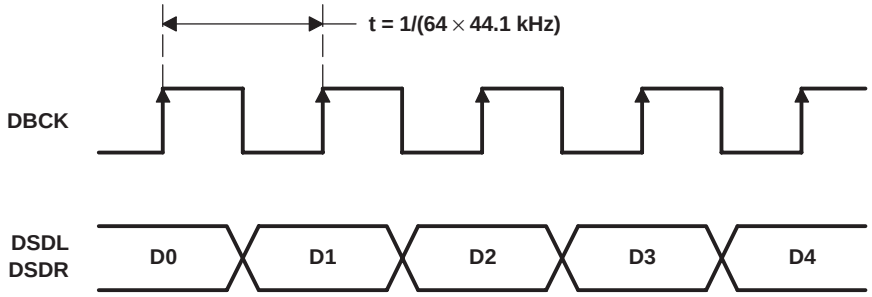

Figure 42. Normal Data Output Form From DSD Decoder

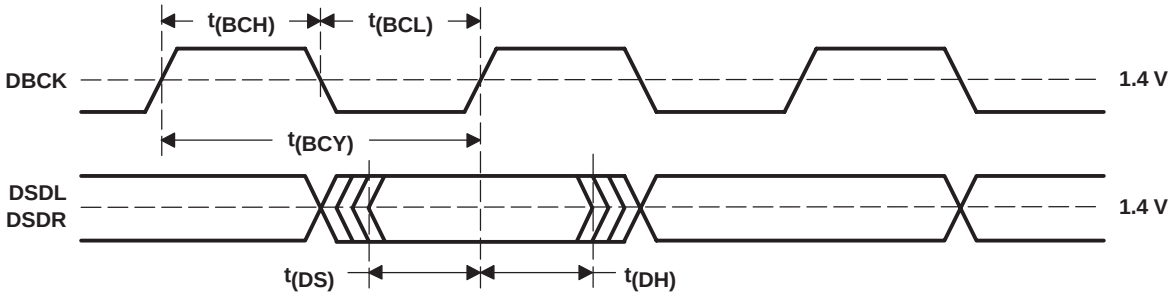

PARAMETER		MIN	MAX	UNITS
$t_{(BCY)}$	DBCK pulse cycle time	85(1)		ns
$t_{(BCH)}$	DBCK high-level time	30		ns
$t_{(BCL)}$	DBCK low-level time	30		ns
$t_{(DS)}$	DSDL, DSDR setup time	10		ns
$t_{(DH)}$	DSDL, DSDR hold time	10		ns

(1) 2.8224 MHz × 4. (2.8224 MHz = 64 × 44.1 kHz. This value is specified as a sampling rate of DSD.)

Figure 43. Timing for DSD Audio Interface

ANALOG FIR FILTER PERFORMANCE IN DSD MODE

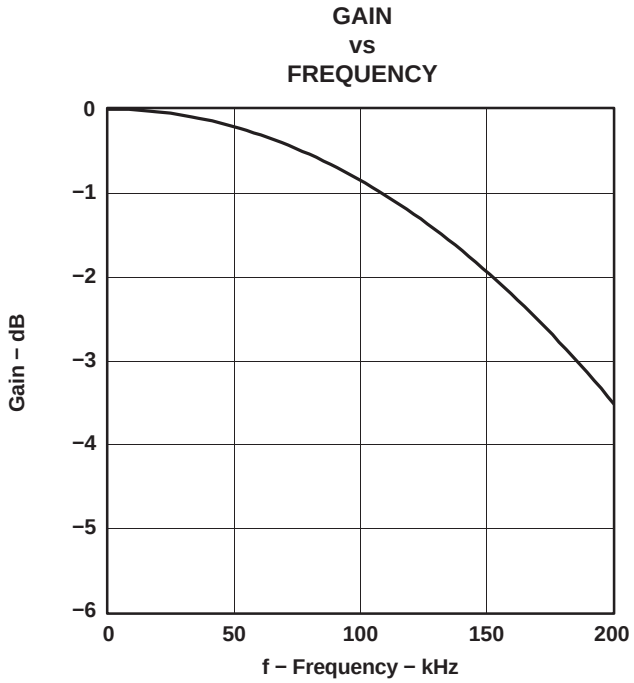

Figure 44. DSD Filter-1, Low BW

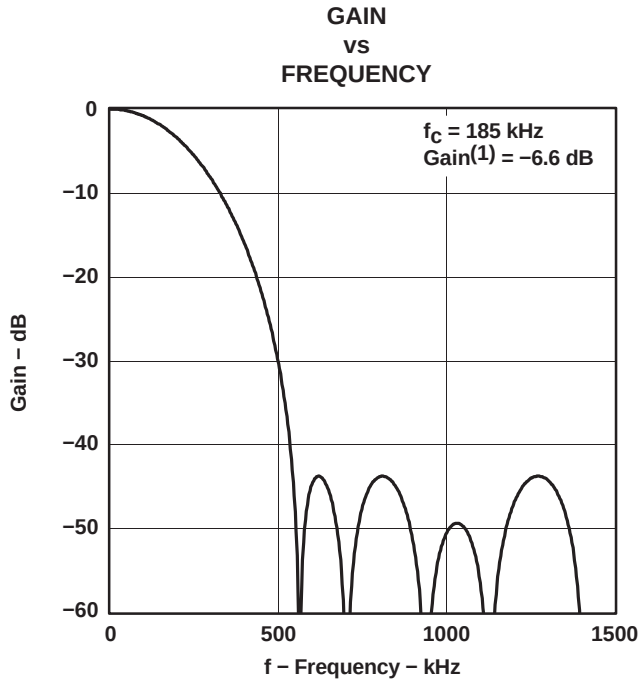

Figure 45. DSD Filter-1, High BW

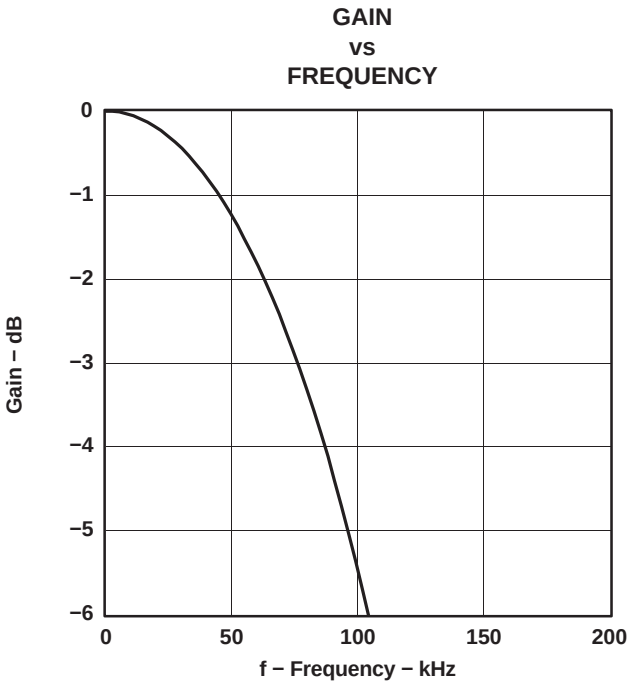

Figure 46. DSD Filter-2, Low BW

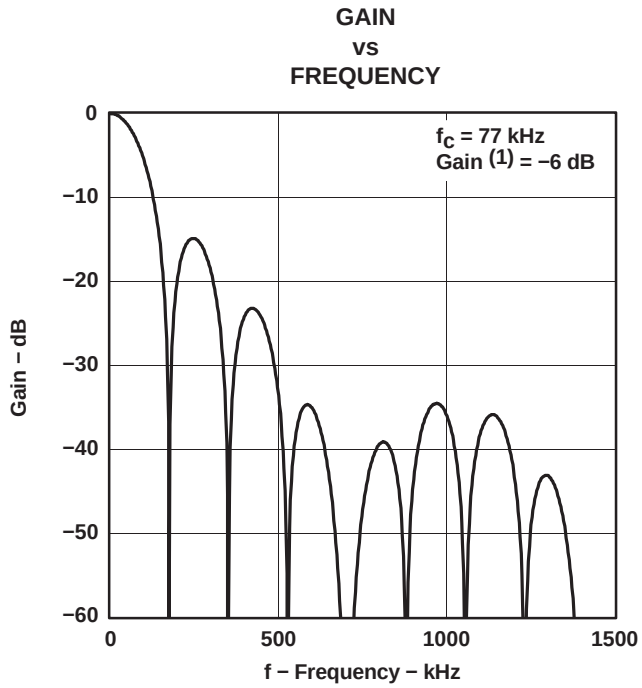

Figure 47. DSD Filter-2, High BW

(1) This gain is in comparison to PCM 0 dB, when the DSD input signal efficiency is 50%.

All specifications at DBCK = 2.8224 MHz (44.1 kHz × 64 f_S), and 50% modulation DSD data input, unless otherwise noted.

ANALOG FIR FILTER PERFORMANCE IN DSD MODE (CONTINUED)

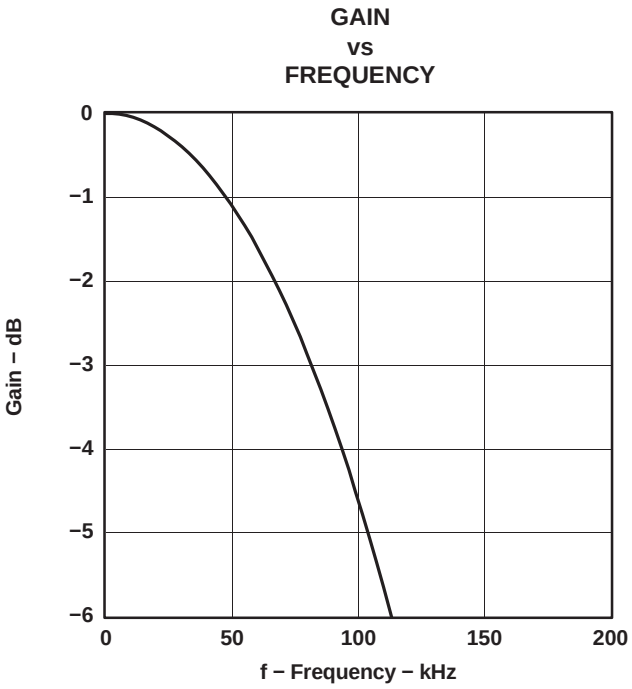

Figure 48. DSD Filter-3, Low BW

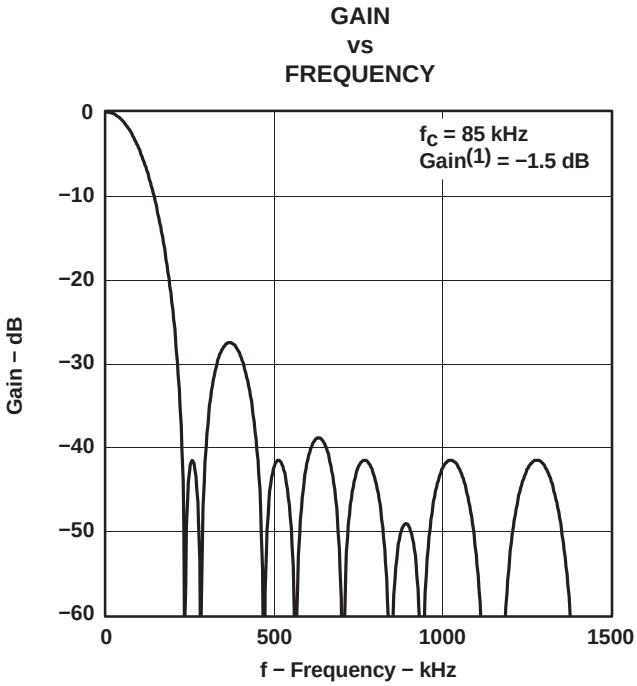

Figure 49. DSD Filter-3, High BW

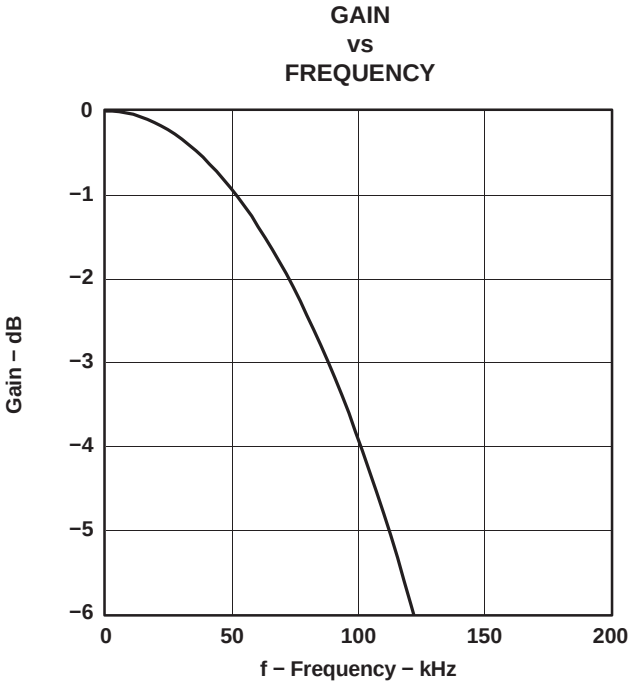

Figure 50. DSD Filter-4, Low BW

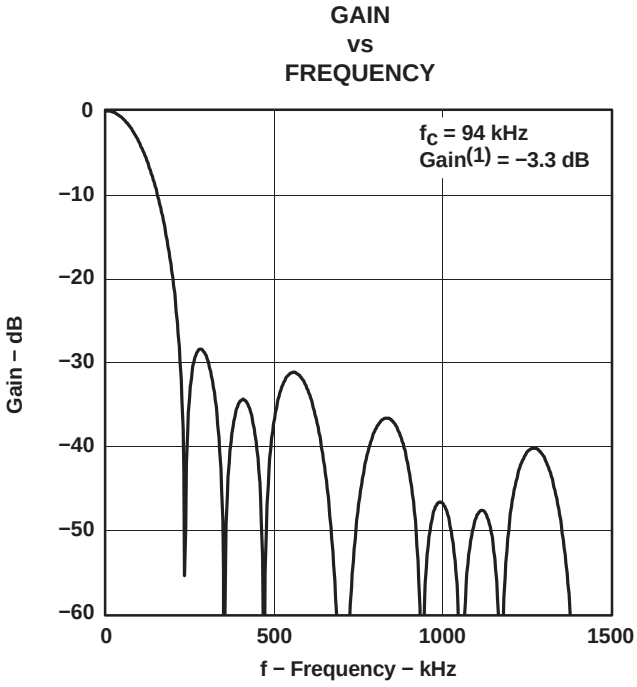

Figure 51. DSD Filter-4, High BW

(1) This gain is in comparison to PCM 0 dB, when the DSD input signal efficiency is 50%.

All specifications at DBCK = 2.8224 MHz (44.1 kHz × 64 f_S), and 50% modulation DSD data input, unless otherwise noted.

DSD MODE CONFIGURATION AND FUNCTION CONTROLS

Configuration for the DSD Interface Mode

DSD = 1 (Register 20, B5)

	B15	B14	B13	B12	B11	B10	B9	B8	B7	B6	B5	B4	B3	B2	B1	B0
Register 16	R/$\overline{W}$	0	0	1	0	0	0	0	−	−	−	−	−	−	−	−
Register 17	R/$\overline{W}$	0	0	1	0	0	0	1	−	−	−	−	−	−	−	−
Register 18	R/$\overline{W}$	0	0	1	0	0	1	0	−	−	−	−	DMF1	DMF0	−	−
Register 19	R/$\overline{W}$	0	0	1	0	0	1	1	REV	−	−	OPE	−	−	−	−
Register 20	R/$\overline{W}$	0	0	1	0	1	0	0	−	SRST	1	−	MONO	−	OS1	OS0
Register 21	R	0	0	1	0	1	0	1	−	−	−	−	−	DZ1	DZ0	−
Register 22	R	0	0	1	0	1	1	0	−	−	−	−	−	−	ZFGR	ZFGL

NOTE: −: Function is disabled. No operation even if data bit is set

DMF[1:0]: Analog FIR Performance Selection

Default value: 00

DMF[1:0]	Analog FIR Performance Select
00	FIR-1 (default)
01	FIR-2
10	FIR-3
11	FIR-4

Plots for the four analog FIR filter responses are shown in the *ANALOG FIR FILTER PERFORMANCE IN DSD MODE* section of this data sheet.

OS[1:0]: Analog-FIR Operation Speed Selection

Default value: 00

OS[1:0]	Operation Speed Select
00	f_{DBCK} (default)
01	$f_{DBCK}/2$
10	Reserved
11	$f_{DBCK}/4$

The OS bits in the DSD mode select the operating rate of the analog FIR. The OS bits must be set before setting the DSD bit to 1.

TDMCA INTERFACE FORMAT

The PCM1791A supports the time-division-multiplexed command and audio (TDMCA) data format to simplify the host control serial interface. The TDMCA format is designed not only for the McBSP of TI DSPs but also for any programmable devices. The TDMCA format can transfer not only audio data but also command data, so that it can be used together with any kind of device that supports the TDMCA format. The TDMCA frame consists of a command field, extended command field, and some audio data fields. Those audio data are transported to IN devices (such as a DAC) and/or from OUT devices (such as an ADC). The PCM1791A is an IN device. LRCK and BCK are used with both IN and OUT devices so that the sample frequency of all devices in a system must be the same. The TDMCA mode supports a maximum of 30 device IDs. The maximum number of audio channels depends on the BCK frequency.

TDMCA Mode Determination

The PCM1791A recognizes the TDMCA mode automatically when it receives an LRCK signal with a pulse duration of two BCK clocks. If the TDMCA mode operation is not needed, the duty cycle of LRCK must be 50%. Figure 52 shows the LRCK and BCK timing that determines the TDMCA mode. The PCM1791A enters the TDMCA mode after two continuous TDMCA frames. Any TDMCA commands can be issued during the next TDMCA frame after the TDMCA mode is entered.

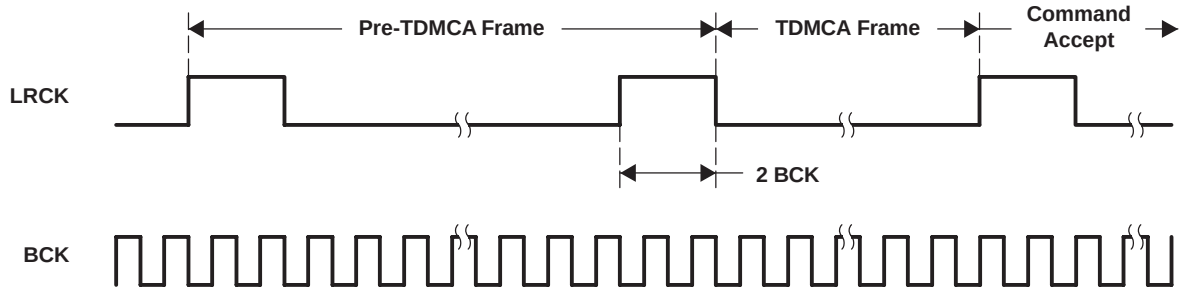

Figure 52. LRCK and BCK Timing for Determination of TDMCA Mode

TDMCA Terminals

TDMCA requires six signals, four of which are for command and audio data interface, and one pair of signals which are for daisy chaining. Those signals can be shared as in the following table. The DO signal has a 3-state output so that it can be connected directly to other devices.

TERMINAL NAME	TDMCA NAME	PROPERTY	DESCRIPTION
LRCK	LRCK	input	TDMCA frame start signal. It must be the same as the sampling frequency.
BCK	BCK	input	TDMCA clock. Its frequency must be high enough to communicate a TDMCA frame within an LRCK cycle.
DATA	DI	input	TDMCA command and audio data input signal
MDI	DO	output	TDMCA command data 3-state output signal
MC	DCI	input	TDMCA daisy-chain input signal
$\overline{MS}$	DCO	output	TDMCA daisy-chain output signal

Device ID Determination

The TDMCA mode also supports a multichip implementation in one system. This means a host controller (DSP) can simultaneously support several TDMCA devices, which can be of the same type or different types, including PCM devices. The PCM devices are categorized as IN device, OUT device, IN/OUT device, and NO device. The IN device has an input port to get audio data, the OUT device has an output port to supply audio data, the IN/OUT device has both input and output ports for audio data, and the NO device has no port for audio data but needs command data from the host. A DAC is an IN device, an ADC is an OUT device, a CODEC is an IN/OUT device, and a PLL is a NO device. The PCM1791A is an IN device. For the host controller to distinguish the devices, each device is assigned its own device ID by the daisy chain. The devices obtain their own device IDs automatically by connecting their DCI to the DCO of the preceding device and their DCO to the DCI of the following device in the daisy chain. The daisy chains are categorized as the IN chain and the OUT chain, which are completely independent and equivalent. Figure 53 shows an example daisy chain connection. If a system needs to chain the PCM1791A and a NO device in the same IN or OUT chain, the NO device must be chained at the back end of the chain because it does not require any audio data. Figure 54 shows an example of TDMCA system including an IN chain and an OUT chain with a TI DSP. For a device to get its own device ID, the DID signal must be set to 1 (see the *Command Field* section for details), and LRCK and BCK must be driven in the TDMCA mode for all PCM devices which are chained. The device at the top of the chain knows its device ID is 1 because its DCI is fixed HIGH. Other devices count the BCK pulses and observe their own DCI signal to determine their position and ID. Figure 55 shows the initialization of each device ID.

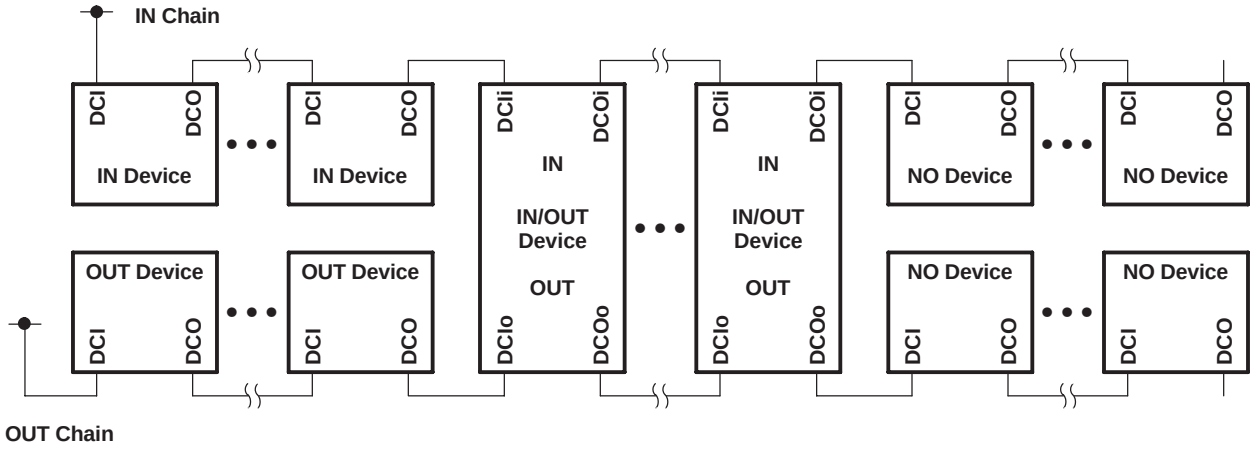

Figure 53. Daisy Chain Connection

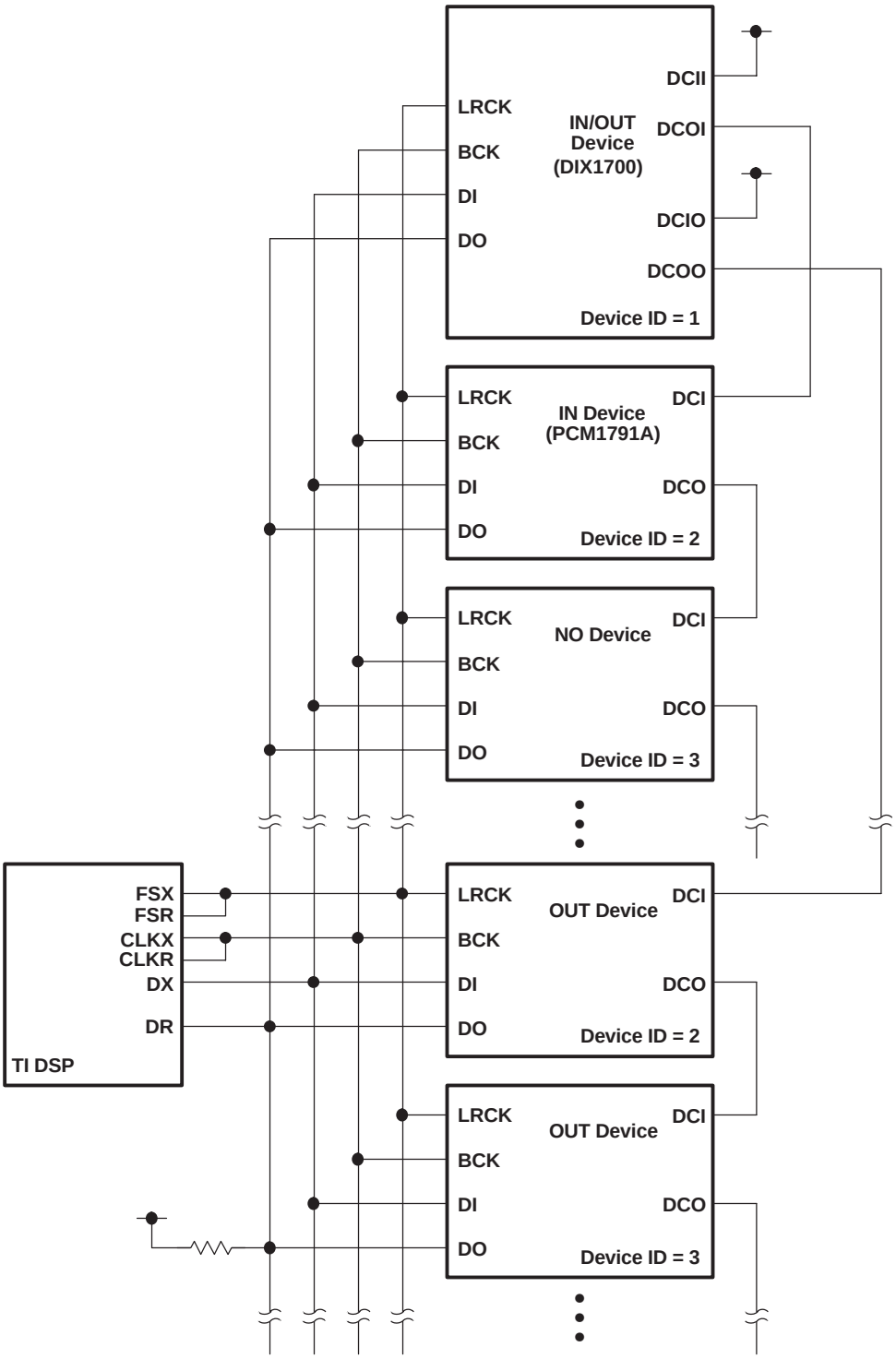

Figure 54. IN Daisy Chain and OUT Daisy Chain Connection for a Multichip System

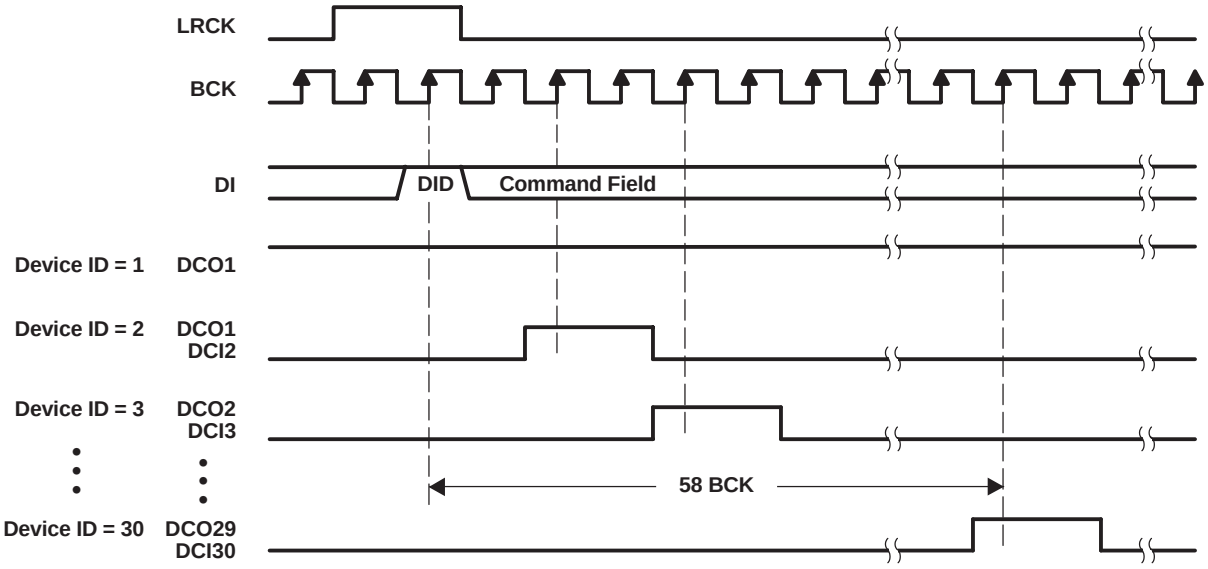

Figure 55. Device ID Determination Sequence

TDMCA Frame

In general, the TDMCA frame consists of the command field, extended command (EMD) field, and audio data fields. All of them are 32 bits in length, but the lowest byte has no meaning. The MSB is transferred first for each field. The command field is always transferred as the first packet of the frame. The EMD field is transferred if the EMD flag of the command field is HIGH. If any EMD packets are transferred, no audio data follows the EMD packets. This frame is for quick system initialization. All devices of a daisy chain should respond to the command field and extended command field. The PCM1791A has two audio channels that can be selected by OPE (register 19). If this OPE bit is not set to HIGH, those audio channels are transferred. Figure 56 shows the general TDMCA frame. If some DACs are enabled, but corresponding audio data packets are not transferred, the analog outputs are unpredictable.

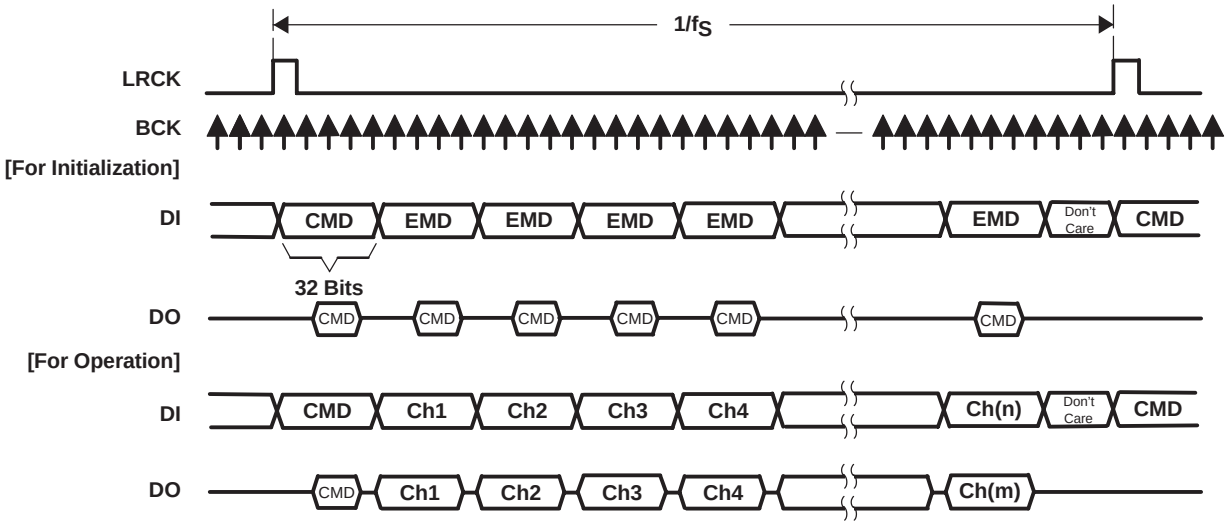

Figure 56. General TDMCA Frame

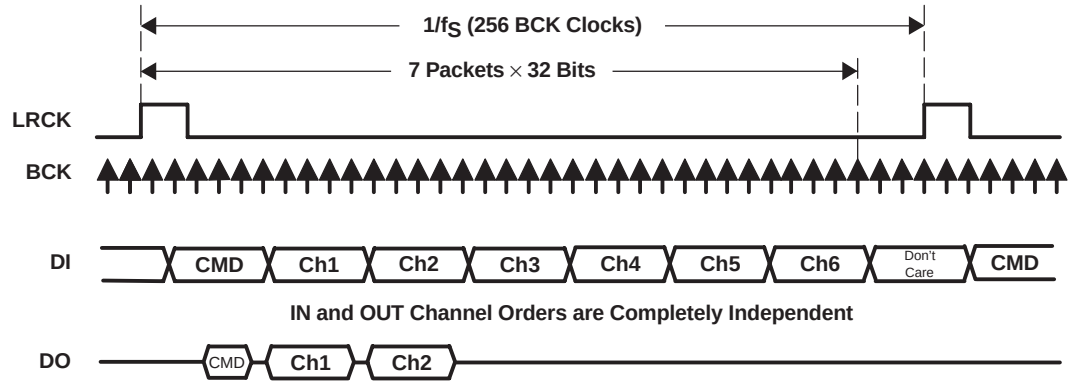

Figure 57. TDMCA Frame Example of 6-Ch DAC and 2-Ch ADC With Command Read

Command Field

The normal command field is defined as follows. When the DID bit (MSB) is 1, this frame is used only for device ID determination, and all remaining bits in the field are ignored.

	31	30	29	28 … 24	23	22 … 16	15 … 8	7 … 0
command	DID	EMD	DCS	device ID	R/$\overline{W}$	register ID	data	not used

Bit 31: Device ID enable flag

The PCM1791A operates to get its own device ID for TDMCA initialization if this bit is HIGH.

Bit 30: Extended command enable flag

An EMD packet is transferred if this bit is HIGH, otherwise skipped. Once it is HIGH, this frame does not contain any audio data. This is for system initialization.

Bit 29: Daisy chain selection flag

HIGH designates OUT-chain devices, LOW designates IN-chain devices. The PCM1791A is an IN device, so the DCS bit must be set to LOW.

Bits[28:24]: Device ID

The device ID is 5 bits in length, and it can be defined. These bits identify the order of a device in the IN or OUT daisy chain. The top of the daisy chain defines device ID 1 and successive devices are numbered 2, 3, 4, etc. All devices for which the DCI is fixed HIGH are also defined as ID 1. The maximum device ID is 30 each in the IN and OUT chains. If a device ID of 0x1F is used, all devices are selected as broadcast when in the write mode. If a device ID of 0x00 is used, no device is selected.

Bit 23: Command Read/Write flag

If this bit is HIGH, the command is a read operation.

Bits[22:16]: Register ID

It is 7 bits in length.

Bits[15:8]: Command data

It is 8 bits in length. Any valid data can be chosen for each register.

Bits[7:0]: Not used

These bits are never transported when a read operation is performed.

Extended command field

The extended command field is the same as the command field, except that it does not have a DID flag.

	31	30	29	28 … 24	23	22 … 16	15 … 8	7 … 0
extended command	rsvd	EMD	DCS	device ID	R/$\overline{W}$	register ID	data	not used

Audio Fields

The audio field is 32 bits in length and the audio data is transferred MSB first, so the other fields must be stuffed with 0s as shown in the following example.

	31	16	12	8	7	4	3	0
audio data	MSB	24 bits		LSB	All 0s			

TDMCA Register Requirements

TDMCA mode requires device ID and audio channel information, previously described. The OPE bit in register 19 indicates audio channel availability and register 23 indicates the device ID. Register 23 is used only in the TDMCA mode. See the mode control register map (Table 4).

Register Write/Read Operation

The command supports register write and read operations. If the command requests to read one register, the read data is transferred on DO during the data phase of the timing cycle. The DI signal can be retrieved at the positive edge of BCK, and the DO signal is driven at the negative edge of BCK. DO is activated one BCK cycle early to compensate for the output delay caused by high impedance. Figure 58 shows the TDMCA write and read timing.

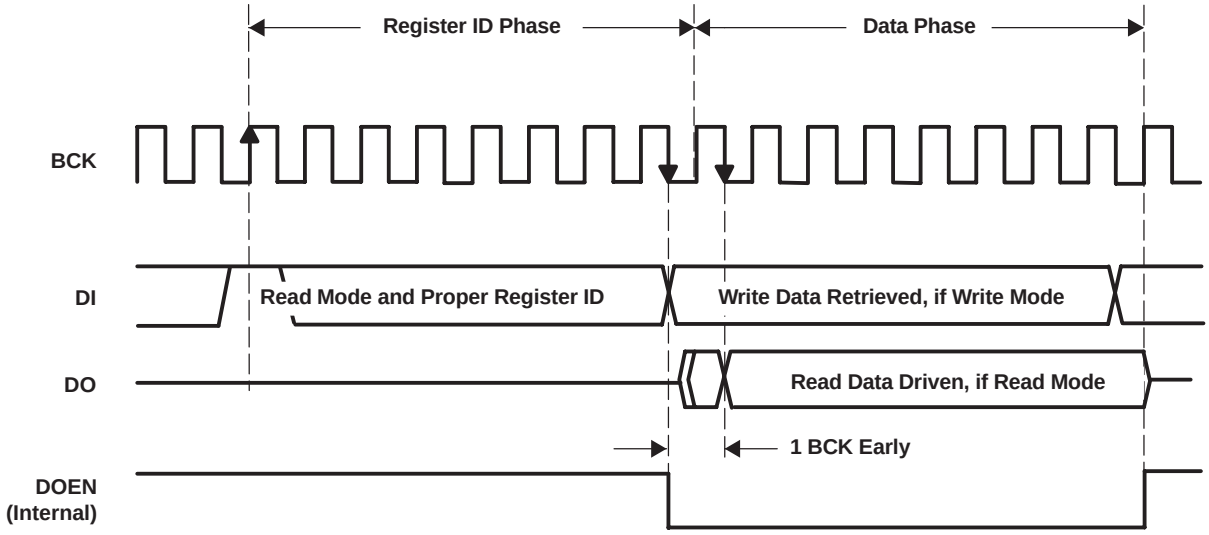

Figure 58. TDMCA Write and Read Operation Timing

TDMCA-Mode Operation

DCO specifies the owner of the next audio channel in TDMCA-mode operation. When a device retrieves its own audio channel data, DCO goes HIGH during the last audio channel period. Figure 59 shows the DCO output timing in TDMCA-mode operation. The host controller ignores the behavior of DCI and DCO. DCO indicates the last audio channel of each device. Therefore, DCI means the next audio channel is allocated.

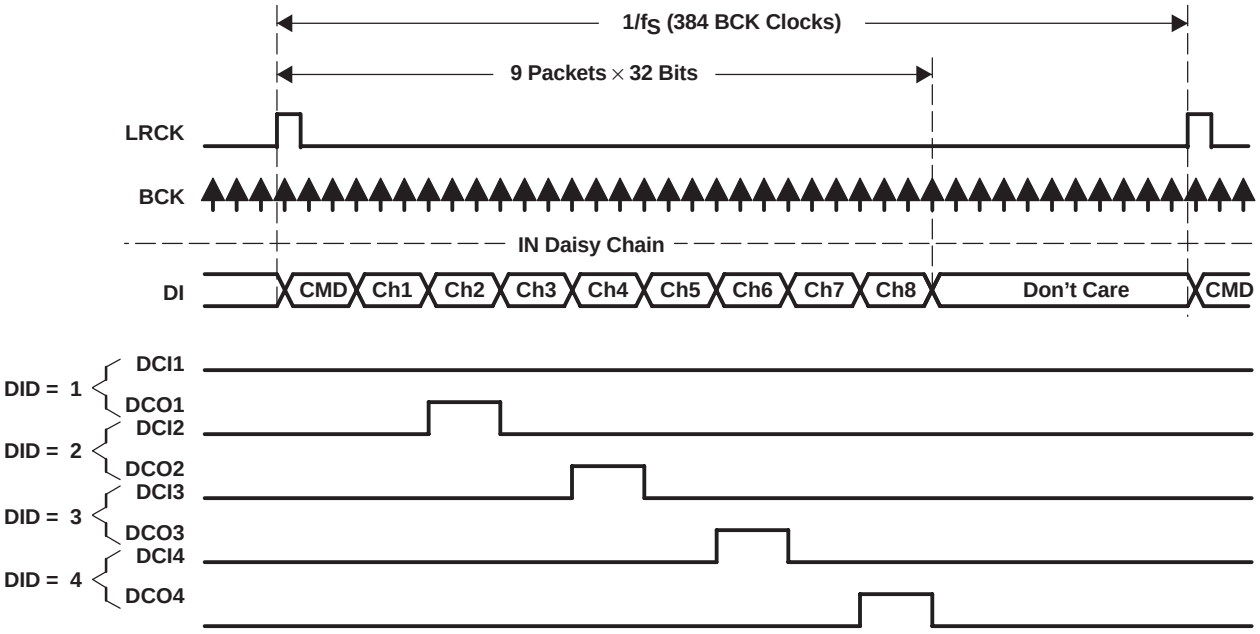

Figure 59. DCO Output Timing of TDMCA Mode Operation

If some devices are skipped due to no active audio channel, the skipped devices must notify the next device that the DCO will be passed through the next DCI. Figure 60 and Figure 61 show DCO timing with skip operation. Figure 62 shows the ac timing of the daisy chain signals.

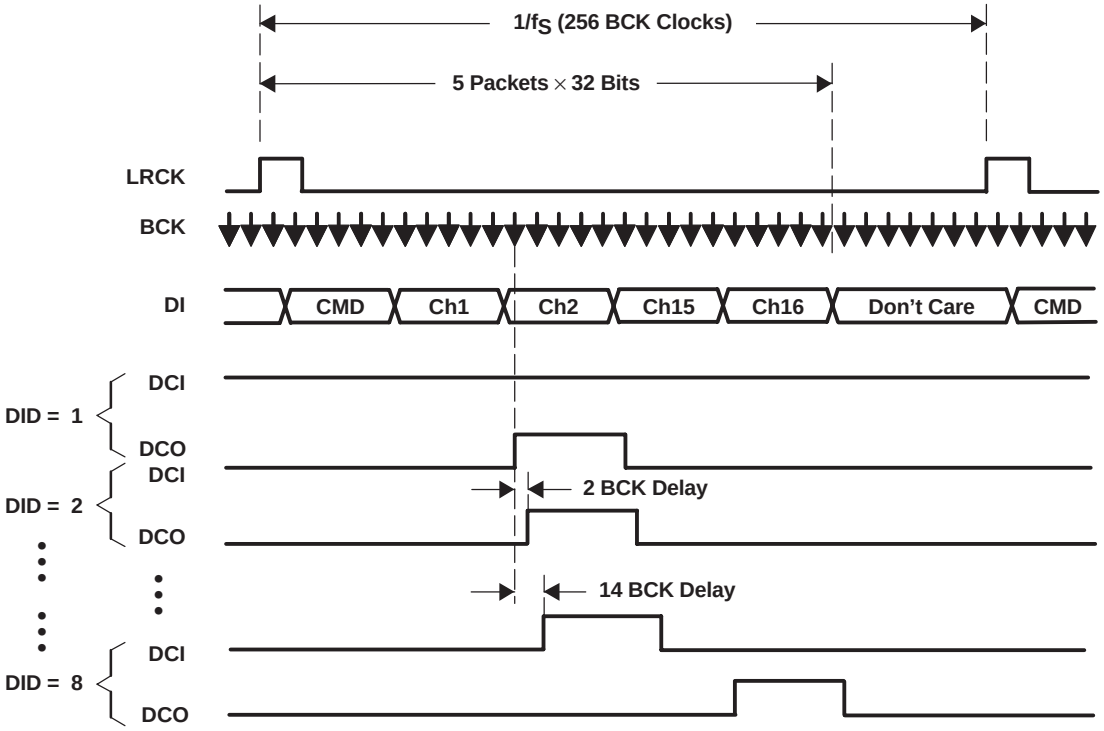

Figure 60. DCO Output Timing With Skip Operation

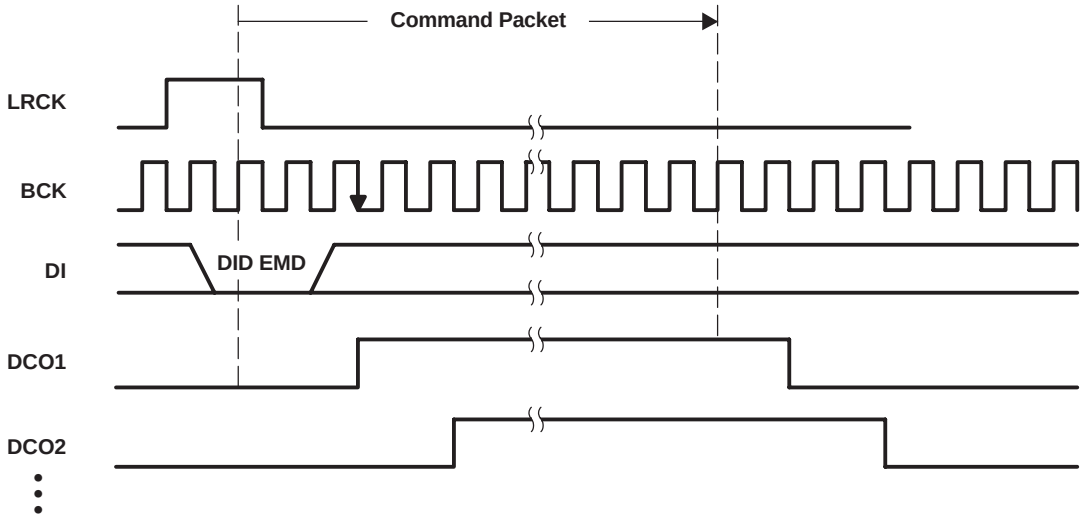

Figure 61. DCO Output Timing With Skip Operation (for Command Packet 1)

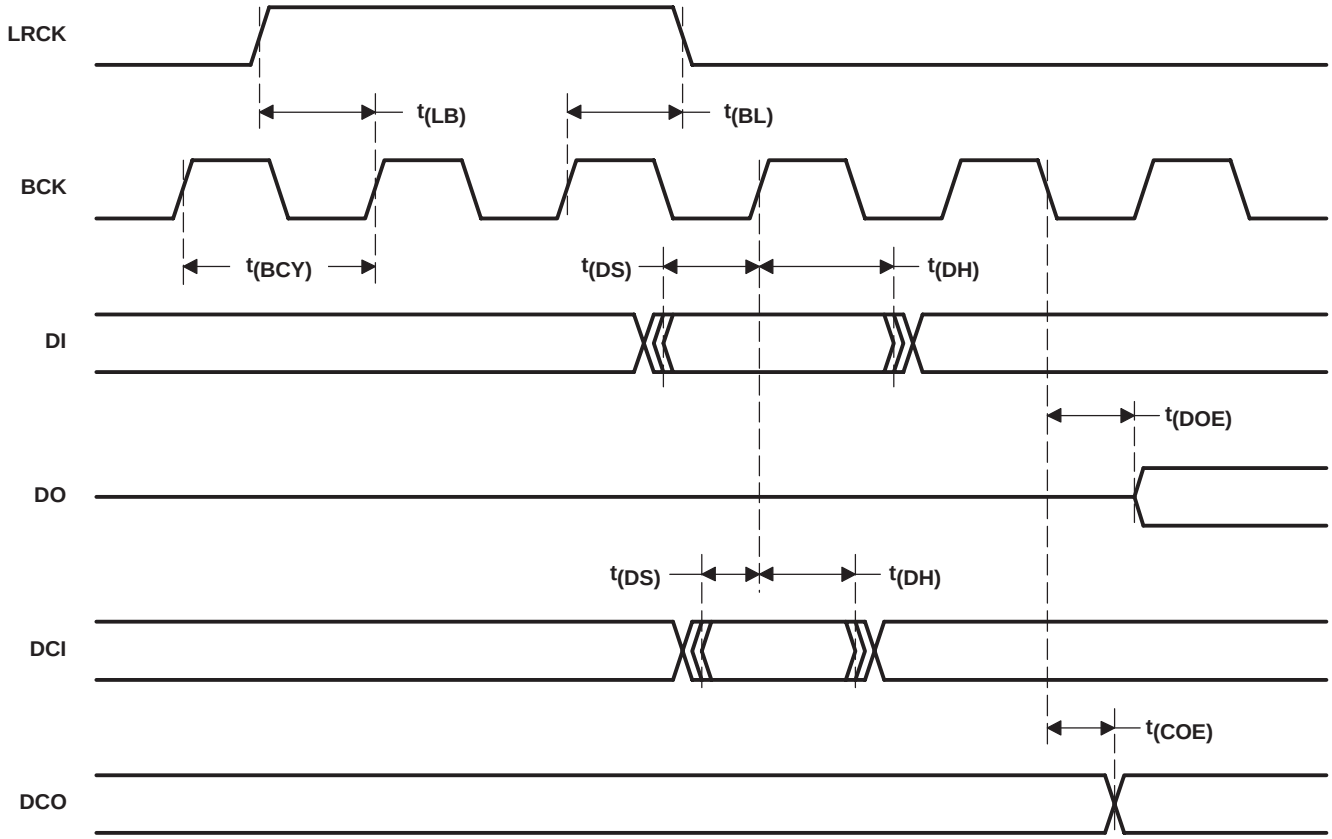

PARAMETER		MIN	MAX	UNITS
$t_{(BCY)}$	BCK pulse cycle time	20		ns
$t_{(LB)}$	LRCK setup time	0		ns
$t_{(BL)}$	LRCK hold time	3		ns
$t_{(DS)}$	DI setup time	0		ns
$t_{(DH)}$	DI hold time	3		ns
$t_{(DS)}$	DCI setup time	0		ns
$t_{(DH)}$	DCI hold time	3		ns
$t_{(DOE)}$	DO output delay(1)		8	ns
$t_{(COE)}$	DCO output delay(1)		6	ns

(1) Load capacitance is 10 pF.

Figure 62. AC Timing of Daisy Chain Signals

THEORY OF OPERATION

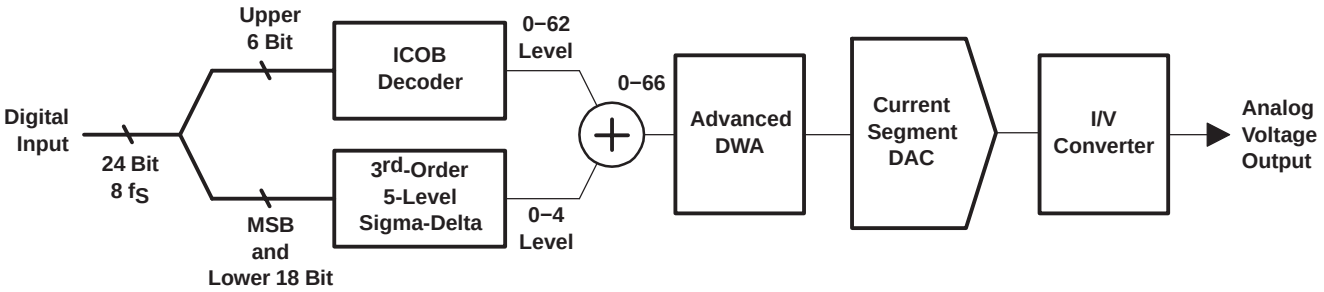

Figure 63. Advanced Segment DAC With I/V Converter

The PCM1791A uses TI's advanced segment DAC architecture to achieve excellent dynamic performance and improved tolerance to clock jitter. The PCM1791A provides balanced voltage outputs.

Digital input data via the digital filter is separated into 6 upper bits and 18 lower bits. The 6 upper bits are converted to inverted complementary offset binary (ICOB) code. The lower 18 bits, in association with the MSB, are processed by a five-level third-order delta-sigma modulator operated at 64 f_S by default. The 1 level of the modulator is equivalent to the 1 LSB of the ICOB code converter. The data groups processed in the ICOB converter and third-order delta-sigma modulator are summed together to an up to 66-level digital code, and then processed by data-weighted averaging (DWA) to reduce the noise produced by element mismatch. The data of up to 66 levels from the DWA is converted to an analog output in the differential-current segment section.

This architecture has overcome the various drawbacks of conventional multibit processing and also achieves excellent dynamic performance.

CONSIDERATIONS FOR APPLICATION CIRCUITS

PCB Layout Guidelines

A typical PCB floor plan for the PCM1791A is shown in Figure 64. A ground plane is recommended, with the analog and digital sections being isolated from one another using a split or cut in the circuit board. The PCM1791A must be oriented with the digital I/O pins facing the ground plane split/cut to allow for short, direct connections to the digital audio interface and control signals originating from the digital section of the board. Separate power supplies are recommended for the digital and analog sections of the board. This prevents the switching noise present on the digital supply from contaminating the analog power supply and degrading the dynamic performance of the D/A converters. In cases where a common 5-V supply would be used for the analog and digital sections, an inductance (RF choke, ferrite bead) must be placed between the analog and digital 5-V supply connections to avoid coupling of the digital switching noise into the analog circuitry. Figure 65 shows the recommended approach for single-supply applications.

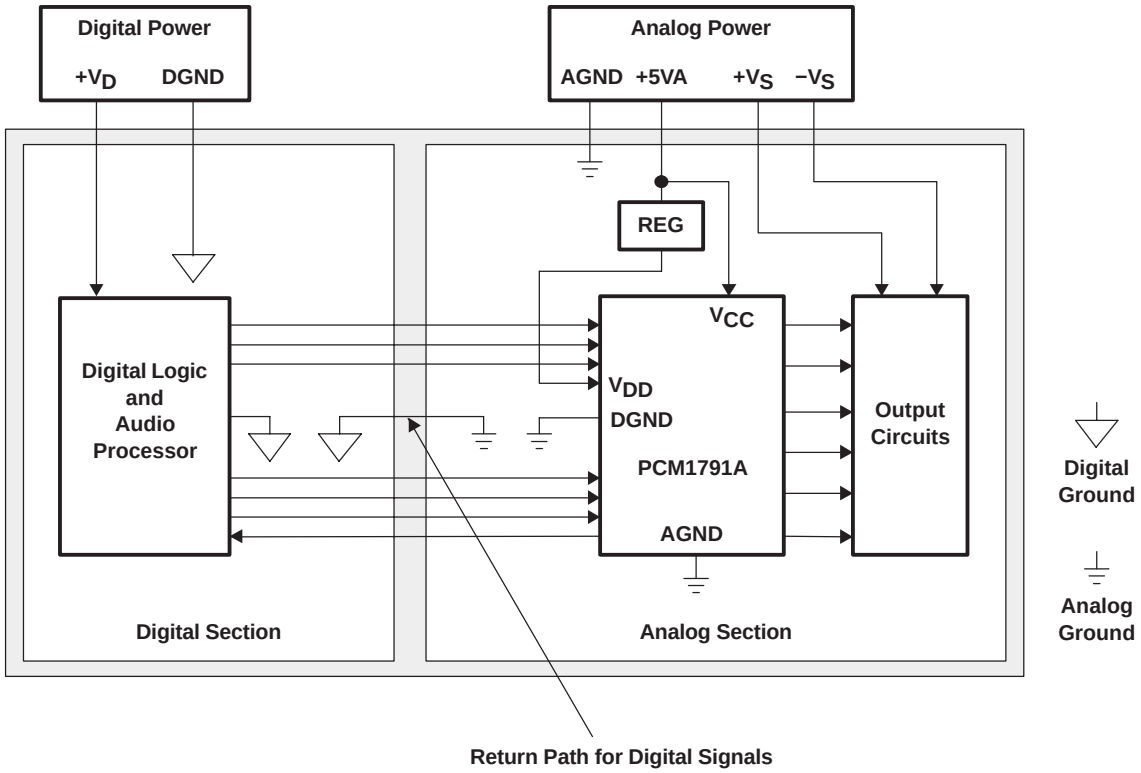

Figure 64. Recommended PCB Layout

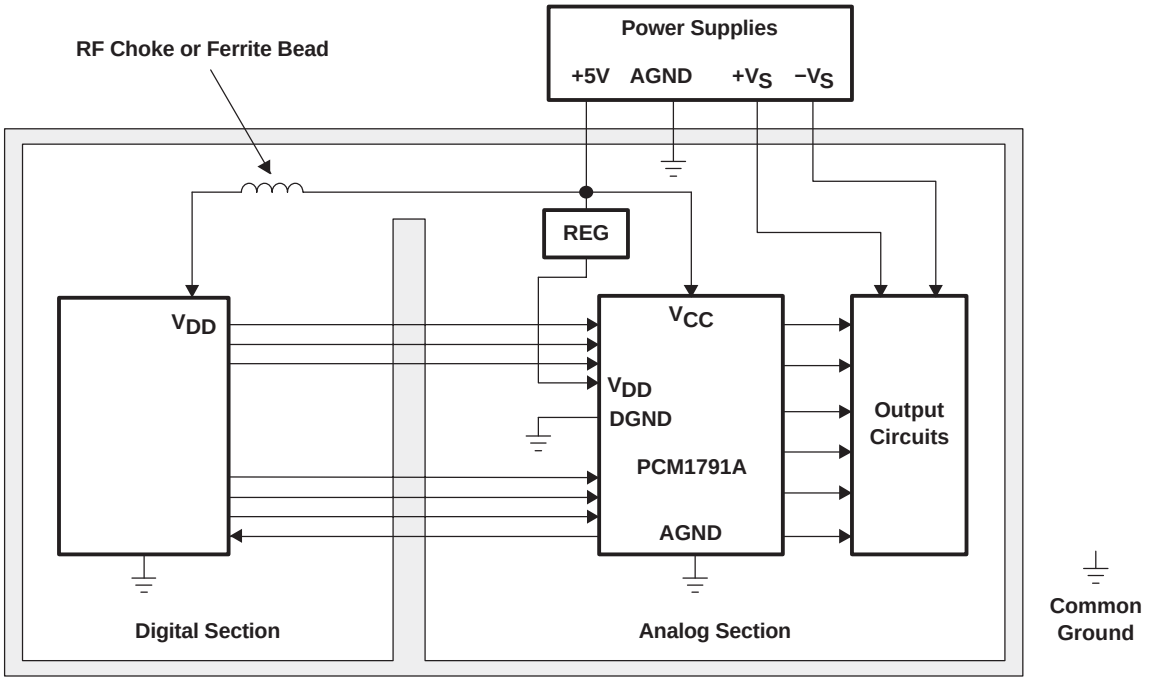

Figure 65. Single-Supply PCB Layout

Bypass and Decoupling Capacitor Requirements

Various sized decoupling capacitors can be used, with no special tolerances being required. All capacitors must be located as close as possible to the appropriate pins of the PCM1791A to reduce noise pickup from surrounding circuitry. Aluminum electrolytic capacitors that are designed for hi-fi audio applications are recommended for larger values, while metal film or monolithic ceramic capacitors are used for smaller values.

Post-LPF Design

By proper choice of the operational amplifier and resistors used in the post-LPF circuit, excellent performance of the PCM1791A should be achieved. To obtain 0.001% THD+N and 113 dB signal-to-noise-ratio audio performance, the THD+N and input noise performance of the operational amplifier should be considered. This is because the input noise of the operational amplifier contributes directly to the output noise level of the application. The V_{OUT} pin of the PCM1791A and the input resistor of the post-LPF circuit must be connected as closely as possible.

Out-of-band noise level and attenuated sampling spectrum level are much lower than for typical delta-sigma type DACs due to the combination of a high-performance digital filter and advanced segment DAC architecture. The use of a second-order or third-order post-LPF is recommended for the post-LPF of the PCM1791A. The cutoff frequency of the post-LPF depends on the application. For example, there are many sampling-rate operations such as f_S = 44.1 kHz on CDDA, f_S = 96 kHz on DVD-M, f_S = 192 kHz on DVD-A, f_S = 64 f_S on DSD (SACD).

MECHANICAL DATA

DB (R-PDSO-G)** **PLASTIC SMALL-OUTLINE**

28 PINS SHOWN

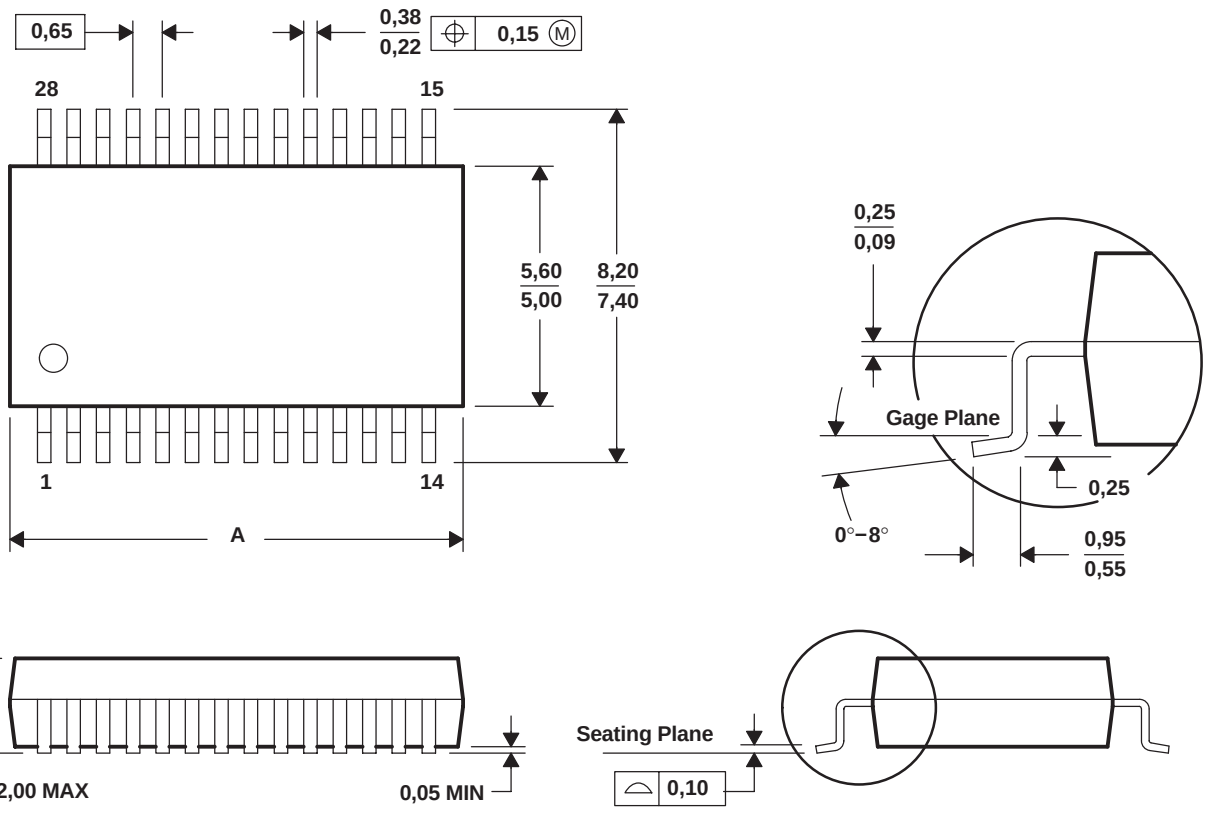

DIM \ PINS **	14	16	20	24	28	30	38
A MAX	6,50	6,50	7,50	8,50	10,50	10,50	12,90
A MIN	5,90	5,90	6,90	7,90	9,90	9,90	12,30

4040065/E 12/01

NOTES: A. All linear dimensions are in millimeters.
B. This drawing is subject to change without notice.
C. Body dimensions do not include mold flash or protrusion not to exceed 0,15.
D. Falls within JEDEC MO-150

PACKAGING INFORMATION

Orderable Device	Status (1)	Package Type	Package Drawing	Pins	Package Qty	Eco Plan (2)	Lead/Ball Finish	MSL Peak Temp (3)
PCM1791ADB	ACTIVE	SSOP	DB	28	47	Green (RoHS & no Sb/Br)	CU NIPDAU	Level-1-260C-UNLIM
PCM1791ADBG4	ACTIVE	SSOP	DB	28	47	Green (RoHS & no Sb/Br)	CU NIPDAU	Level-1-260C-UNLIM
PCM1791ADBR	ACTIVE	SSOP	DB	28	2000	Green (RoHS & no Sb/Br)	CU NIPDAU	Level-1-260C-UNLIM
PCM1791ADBRG4	ACTIVE	SSOP	DB	28	2000	Green (RoHS & no Sb/Br)	CU NIPDAU	Level-1-260C-UNLIM

(1) The marketing status values are defined as follows:
ACTIVE: Product device recommended for new designs.
LIFEBUY: TI has announced that the device will be discontinued, and a lifetime-buy period is in effect.
NRND: Not recommended for new designs. Device is in production to support existing customers, but TI does not recommend using this part in a new design.
PREVIEW: Device has been announced but is not in production. Samples may or may not be available.
OBSOLETE: TI has discontinued the production of the device.

(2) Eco Plan - The planned eco-friendly classification: Pb-Free (RoHS), Pb-Free (RoHS Exempt), or Green (RoHS & no Sb/Br) - please check http://www.ti.com/productcontent for the latest availability information and additional product content details.
TBD: The Pb-Free/Green conversion plan has not been defined.
Pb-Free (RoHS): TI's terms "Lead-Free" or "Pb-Free" mean semiconductor products that are compatible with the current RoHS requirements for all 6 substances, including the requirement that lead not exceed 0.1% by weight in homogeneous materials. Where designed to be soldered at high temperatures, TI Pb-Free products are suitable for use in specified lead-free processes.
Pb-Free (RoHS Exempt): This component has a RoHS exemption for either 1) lead-based flip-chip solder bumps used between the die and package, or 2) lead-based die adhesive used between the die and leadframe. The component is otherwise considered Pb-Free (RoHS compatible) as defined above.
Green (RoHS & no Sb/Br): TI defines "Green" to mean Pb-Free (RoHS compatible), and free of Bromine (Br) and Antimony (Sb) based flame retardants (Br or Sb do not exceed 0.1% by weight in homogeneous material)

(3) MSL, Peak Temp. -- The Moisture Sensitivity Level rating according to the JEDEC industry standard classifications, and peak solder temperature.

Important Information and Disclaimer: The information provided on this page represents TI's knowledge and belief as of the date that it is provided. TI bases its knowledge and belief on information provided by third parties, and makes no representation or warranty as to the accuracy of such information. Efforts are underway to better integrate information from third parties. TI has taken and continues to take reasonable steps to provide representative and accurate information but may not have conducted destructive testing or chemical analysis on incoming materials and chemicals. TI and TI suppliers consider certain information to be proprietary, and thus CAS numbers and other limited information may not be available for release.

In no event shall TI's liability arising out of such information exceed the total purchase price of the TI part(s) at issue in this document sold by TI to Customer on an annual basis.

TAPE AND REEL INFORMATION

REEL DIMENSIONS

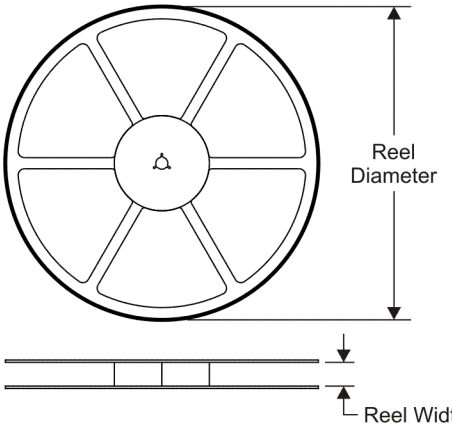

TAPE DIMENSIONS

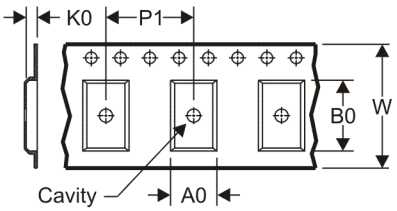

A0	Dimension designed to accommodate the component width
B0	Dimension designed to accommodate the component length
K0	Dimension designed to accommodate the component thickness
W	Overall width of the carrier tape
P1	Pitch between successive cavity centers

QUADRANT ASSIGNMENTS FOR PIN 1 ORIENTATION IN TAPE

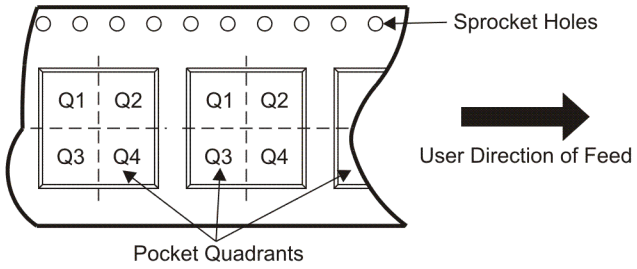

*All dimensions are nominal

Device	Package Type	Package Drawing	Pins	SPQ	Reel Diameter (mm)	Reel Width W1 (mm)	A0 (mm)	B0 (mm)	K0 (mm)	P1 (mm)	W (mm)	Pin1 Quadrant
PCM1791ADBR	SSOP	DB	28	2000	330.0	17.4	8.5	10.8	2.4	12.0	16.0	Q1

TAPE AND REEL BOX DIMENSIONS

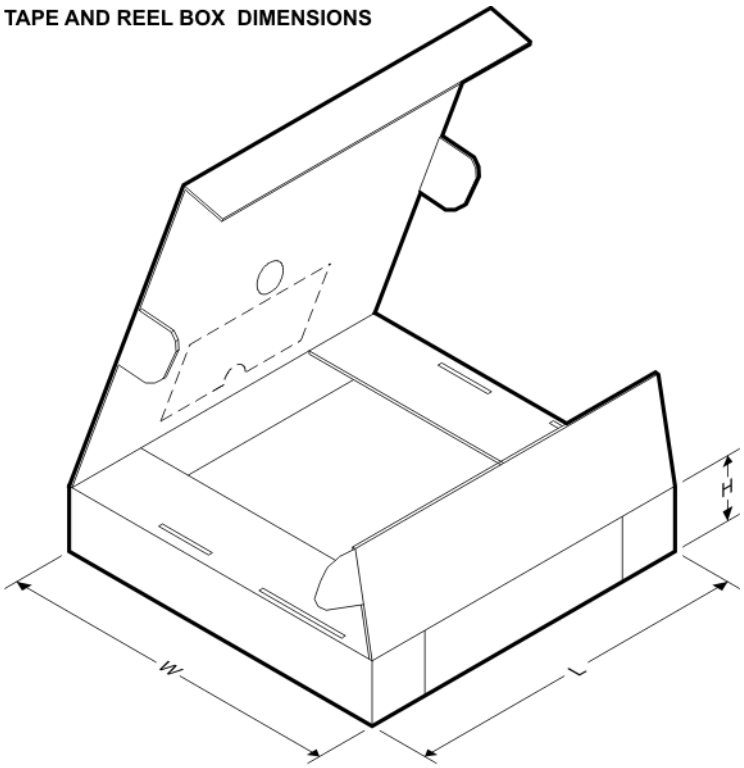

*All dimensions are nominal

Device	Package Type	Package Drawing	Pins	SPQ	Length (mm)	Width (mm)	Height (mm)
PCM1791ADBR	SSOP	DB	28	2000	336.6	336.6	28.6

MSSO002E – JANUARY 1995 – REVISED DECEMBER 2001

DB (R-PDSO-G)** **PLASTIC SMALL-OUTLINE**

28 PINS SHOWN

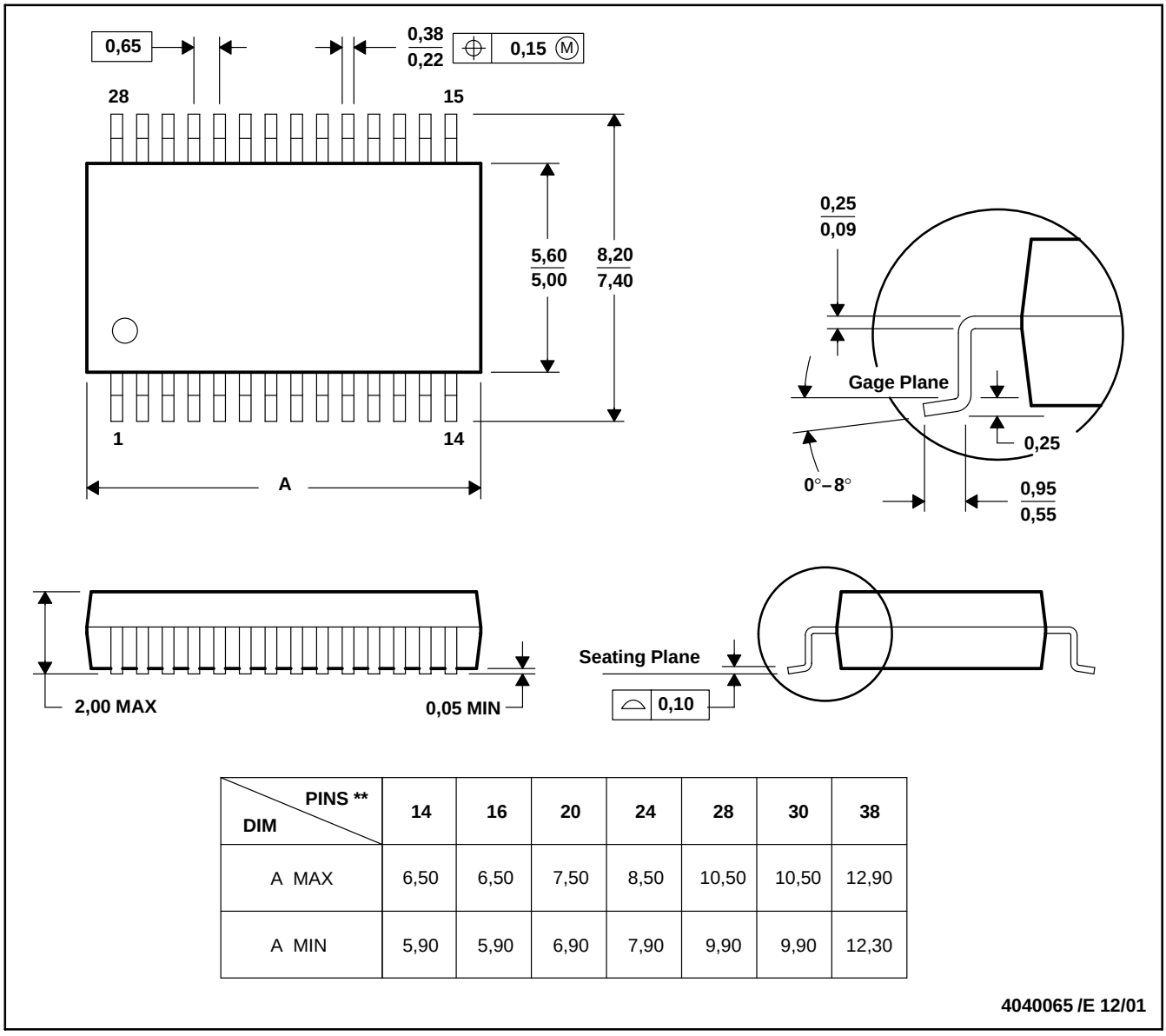

DIM \ PINS **	14	16	20	24	28	30	38
A MAX	6,50	6,50	7,50	8,50	10,50	10,50	12,90
A MIN	5,90	5,90	6,90	7,90	9,90	9,90	12,30

4040065 /E 12/01

NOTES: A. All linear dimensions are in millimeters.
B. This drawing is subject to change without notice.
C. Body dimensions do not include mold flash or protrusion not to exceed 0,15.
D. Falls within JEDEC MO-150

IMPORTANT NOTICE

Texas Instruments Incorporated and its subsidiaries (TI) reserve the right to make corrections, modifications, enhancements, improvements, and other changes to its products and services at any time and to discontinue any product or service without notice. Customers should obtain the latest relevant information before placing orders and should verify that such information is current and complete. All products are sold subject to TI's terms and conditions of sale supplied at the time of order acknowledgment.

TI warrants performance of its hardware products to the specifications applicable at the time of sale in accordance with TI's standard warranty. Testing and other quality control techniques are used to the extent TI deems necessary to support this warranty. Except where mandated by government requirements, testing of all parameters of each product is not necessarily performed.

TI assumes no liability for applications assistance or customer product design. Customers are responsible for their products and applications using TI components. To minimize the risks associated with customer products and applications, customers should provide adequate design and operating safeguards.

TI does not warrant or represent that any license, either express or implied, is granted under any TI patent right, copyright, mask work right, or other TI intellectual property right relating to any combination, machine, or process in which TI products or services are used. Information published by TI regarding third-party products or services does not constitute a license from TI to use such products or services or a warranty or endorsement thereof. Use of such information may require a license from a third party under the patents or other intellectual property of the third party, or a license from TI under the patents or other intellectual property of TI.

Reproduction of TI information in TI data books or data sheets is permissible only if reproduction is without alteration and is accompanied by all associated warranties, conditions, limitations, and notices. Reproduction of this information with alteration is an unfair and deceptive business practice. TI is not responsible or liable for such altered documentation. Information of third parties may be subject to additional restrictions.

Resale of TI products or services with statements different from or beyond the parameters stated by TI for that product or service voids all express and any implied warranties for the associated TI product or service and is an unfair and deceptive business practice. TI is not responsible or liable for any such statements.

TI products are not authorized for use in safety-critical applications (such as life support) where a failure of the TI product would reasonably be expected to cause severe personal injury or death, unless officers of the parties have executed an agreement specifically governing such use. Buyers represent that they have all necessary expertise in the safety and regulatory ramifications of their applications, and acknowledge and agree that they are solely responsible for all legal, regulatory and safety-related requirements concerning their products and any use of TI products in such safety-critical applications, notwithstanding any applications-related information or support that may be provided by TI. Further, Buyers must fully indemnify TI and its representatives against any damages arising out of the use of TI products in such safety-critical applications.

TI products are neither designed nor intended for use in military/aerospace applications or environments unless the TI products are specifically designated by TI as military-grade or "enhanced plastic." Only products designated by TI as military-grade meet military specifications. Buyers acknowledge and agree that any such use of TI products which TI has not designated as military-grade is solely at the Buyer's risk, and that they are solely responsible for compliance with all legal and regulatory requirements in connection with such use.

TI products are neither designed nor intended for use in automotive applications or environments unless the specific TI products are designated by TI as compliant with ISO/TS 16949 requirements. Buyers acknowledge and agree that, if they use any non-designated products in automotive applications, TI will not be responsible for any failure to meet such requirements.

Following are URLs where you can obtain information on other Texas Instruments products and application solutions:

Products		**Applications**	
Amplifiers	amplifier.ti.com	Audio	www.ti.com/audio
Data Converters	dataconverter.ti.com	Automotive	www.ti.com/automotive
DLP® Products	www.dlp.com	Broadband	www.ti.com/broadband
DSP	dsp.ti.com	Digital Control	www.ti.com/digitalcontrol
Clocks and Timers	www.ti.com/clocks	Medical	www.ti.com/medical
Interface	interface.ti.com	Military	www.ti.com/military
Logic	logic.ti.com	Optical Networking	www.ti.com/opticalnetwork
Power Mgmt	power.ti.com	Security	www.ti.com/security
Microcontrollers	microcontroller.ti.com	Telephony	www.ti.com/telephony
RFID	www.ti-rfid.com	Video & Imaging	www.ti.com/video
RF/IF and ZigBee® Solutions	www.ti.com/lprf	Wireless	www.ti.com/wireless

Mailing Address: Texas Instruments, Post Office Box 655303, Dallas, Texas 75265
Copyright © 2009, Texas Instruments Incorporated