PCM-2300MR

MR4A16B, MRAM, 2 MByte, mPCIe

NEW

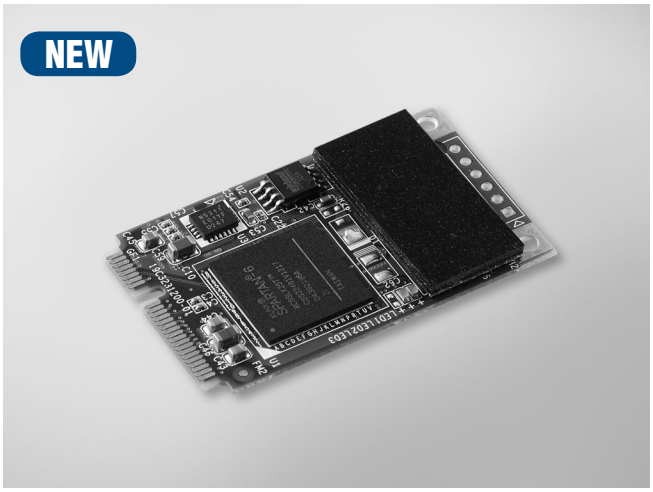

Features

- Meets Advantech Standard iDoor Technology
- PCI Express® Mini Card Specification Revision 1.2 compliant
- Data always non-volatile for >20-year at temperature
- Read / Write Memory speed 6 MB/Sec
- 2MB MRAM Storage
- I/O address automatically assigned by PCIe plug & play
- Supports Microsoft® Windows CE5/CE6
- Supports Microsoft® Windows Enterprise Server 2008, Windows Embedded Standard WES7/2009, Windows XP/7
- Supports Linux Intel x86 hardware platform
  Supports Embedded Automation PC UNO-2200/2300/2400 series
- Supports Control DIN-Rail PC UNO-1200/1300/1400 series
- Supports Control Cabinet PC UNO-3200/3300/3400 series
- Supports Control Panel Computers TPC-xx81/xx82 series
- Supports Thin Client Panel Computers TPC-xx51 series

Introduction

The PCM-23 series is categorized as Industrial storage or memory modules for the mPCIe interface which is able to extend connection to the connector through iDoor technology with different functions. They are all compatible with the PCI Express® Mini Card Specification Revision 1.2. including Isolated / Non-Isolated RS-232/422/485 communication cards for automation control, Wi-Fi/3G/GPS/GSM/LTE wireless communication models for data exchange during the management and machine level of automation application, Zigbee module as an IoT terminal or controller and PoE function for smart camera in detect inspection application of production. This is a flexible design that enables customers to customize their features which meet iDoor Technology.

Specifications

General

- **Bus Type** PCI Express Mini Card Revision 1.2
- **Certification** CE, FCC class A
- **Dimensions** Module: 51 x 30 x 12.4 mm (2" x 1.18" x 0.49")
- **Power Consumption** Typical : +3.3 V @ 150 mA

Memory

- **Memory Everspin** MR4A16B
- **Size** 2 MB
- **Read/Write Speed** 6 MB/sec

Software

- **Driver** Microsoft® Windows CE5/CE6
  Microsoft® Windows Enterprise Server 2008
  Microsoft® Windows Embedded Standard WES7/2009
  Microsoft® Windows XP/7

Environment

- **Humidity (Operating)** 5-95% RH, non-condensing
- **Operating Temperature** -20 ~ 60°C (-4 ~ 140°F)
- **Storage Temperature** -40 ~ 85°C (-40 ~ 185°F)
- **Maximum magnetic field immunity during write** 8000 A/m
- **Maximum magnetic field during reading or standby** 8000 A/m

Dimensions

Module
PCM-2300MR

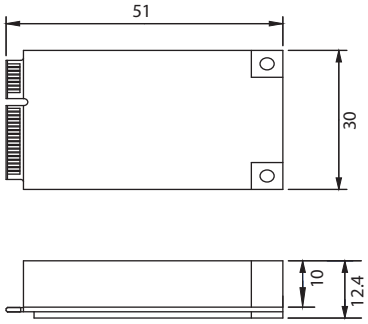

Ordering Information

- **PCM-2300MR-AE** MR4A16B, MRAM, 2MByte

All product specifications are subject to change without notice