PCHC25 Power Chip High Current Inductors

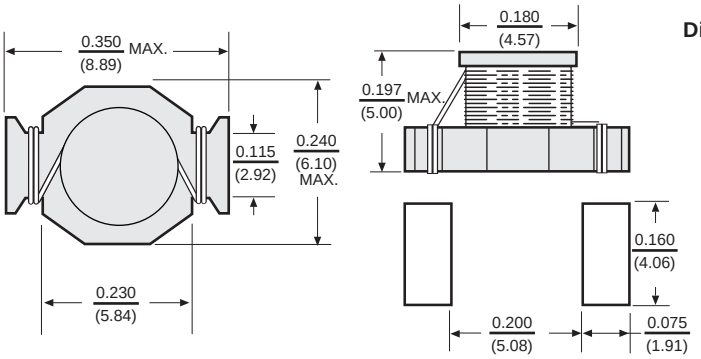

Dimensions: Inches / (mm)



Features

- Designed for high power DC to DC applications
- Saturation current up to 8.2A
- Extremely low DCR
- Rugged self leaded construction
- Provided in tape and reel packaging for pick and place assembly

Electrical

Inductance Range: .33µh to 47µh

Tolerance: ± 20% over the entire inductance range.

Test Frequency: Inductance measured at 100KHz, 0.25 Vrms.

Operating Temp. Range: -40° to +125ºC

Inductance Drop: 30% typically at the rated Isat.

Temperature Rise: ΔT=40ºC rise typical at Irms.

Physical

Marking: Previoulsy marked with 3 dot color code system

Packaging: 1000 pieces per 13 inch reel.

Allied Part Number	Inductance (µh)	Tolerance (%)	SRF Reference (MHz)	DCR Max. (Ω)	Isat (A)	Irms (A)
PCHC25-R33M-RC	0.33	20	330	.007	8.2	
PCHC25-R56M-RC	0.56	20	200	.010	7.7	6.0
PCHC25-1R0M-RC	1.0	20	140	.017	5.3	4.4
PCHC25-1R2M-RC	1.2	20	140	.017	5.3	4.4
PCHC25-1R6M-RC	1.6	20		.022	4.5	
PCHC25-2R2M-RC	2.2	20	100	.035	3.5	3.1
PCHC25-3R3M-RC	3.3	20	60	.047	3.0	2.6
PCHC25-4R7M-RC	4.7	20	50	.054	2.6	2.2
PCHC25-6R8M-RC	6.8	20		.070	2.0	
PCHC25-100M-RC	10.0	20	40	.111	1.9	1.5
PCHC25-150M-RC	15.0	20	30	.170	1.5	1.2
PCHC25-220M-RC	22.0	20	25	.250	1.2	1.0
PCHC25-270M-RC	27.0	20	20	.320	1.0	
PCHC25-330M-RC	33.0	20	20	.350	.99	.82
PCHC25-470M-RC	47.0	20	15	.470	.87	.72

All specifications subject to change without notice.