POSICHRON®

PCFP25

Ultra flat Profile Housing with analog Output

Ultra flat POSICHRON® position sensor

- **Only 8 mm high and 28 mm wide**
- **Protection class up to IP67**
- **Measurement range 0 ... 100 to 0 ... 5750 mm**
- **Absolute position measurement**
- **Absolutely wear free and maintenance-free**
- **Wide variety of mounting**
- **Analog output**

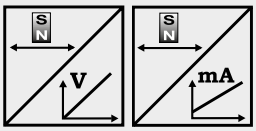

Specifications		
	Output	Voltage Current
	Resolution	Refer to output specification
	Sampling rate	Up to 1 kHz, depending on the measurement range
	Linearity	Ranges >500 mm: L10 = ±0.10 % f.s. L02 = ±0.02 % f.s. Ranges ≤500 mm: L10 = ±0.5 mm L02MM = ±0.2 mm
	Repeatability	±3 µm
	Material	AlMgSi1 and plastic
	Protection class	IP64 (optional IP67)
	Connection	Cable 2 m
	Shock	EN 60068-2-27:2010, 50 g/11 ms, 100 shocks
	Vibration	EN 60068-2-6:2008, 20 g 10 Hz-2 kHz, 10 cycles
	EMC, temperature	Refer to output specification

Order code PCFP25 1 channel

PCFP25 – ☐ – ☐ – ☐ – ☐ – ☐

Model name

Measurement range (in mm)
100 ... 5750 (in 10 mm increments)
other lengths upon request

Output

U1	= 0 ... 10 V signal conditioner
U1/H	= U1 with Alarm_HOLD (see page 9)
U2	= 0.5 ... 10 V signal conditioner
U2/U; U2/H	= U2 with Alarm_LOW; U2 with Alarm_HOLD (see page 9)
U8	= 0.5 ... 4.5 V signal conditioner
U8/U; U8/H	= U8 with Alarm_LOW; U8 with Alarm_HOLD (see page 9)
I1	= 4 ... 20 mA signal conditioner (3 wire)
I1/U; I1/H	= I1 with Alarm_LOW; I1 with Alarm_HOLD (see page 9)

Function and characteristics output

P1A	= Position Magnet 1, increasing
P1D	= Position Magnet 1, decreasing
PMU	= Start value, direction & end value adjustable by the customer

Linearity
L02 / L02MM / L10 (for definition see "Specifications" above)

Connection
KAB2M = Cable, standard length 2 m, other lengths upon request

Order code position magnet (see page 39) **PCFP25-BFS1**

© ASM GmbH
info@asm-sensor.com

Order Code PCFP25
2 channel, configurable

PCFP25 – ☐ – ☐ – ☐ – ☐ – ☐ – ☐

Model name

Measurement range (in mm)
100 ... 5750 (in 10 mm increments)
other lengths upon request

Output

U1	= 0 ... 10 V signal conditioner
U1/H	= U1 with Alarm_HOLD (see page 9)
U2	= 0.5 ... 10 V signal conditioner
U2/U; U2/H	= U2 with Alarm_LOW; U2 with Alarm_HOLD (see page 9)
U8	= 0.5 ... 4.5 V signal conditioner
U8/U; U8/H	= U8 with Alarm_LOW; U8 with Alarm_HOLD (see page 9)
I1	= 4 ... 20 mA signal conditioner (3 wire)
I1/U; I1/H	= I1 with Alarm_LOW; I1 with Alarm_HOLD (see page 9)

Function and characteristics output 1

P1A	= Position magnet 1, increasing
P1D	= Position magnet 1, decreasing
DA	= Difference magnet 1/2, increasing (2 magnets required)
DD	= Difference magnet 1/2, decreasing (2 magnets required)

Function and characteristics output 2

P2A	= Position magnet 2, increasing	2 magnets required
P2D	= Position magnet 2, decreasing	
DA	= Difference magnet 1/2, increasing	
DD	= Difference magnet 1/2, decreasing	

VZx.x = Velocity <u>with</u> direction detection (with 1 magnet only)

VZx.x = Velocity in steps of 0.1 m/s

<u>Example: VZ1.5</u>	towards start position		towards end position
	-1.5 m/s	0	+1.5 m/s
Output U2:	0.5 V	5.25 V	10 V
Output I1:	4 mA	12 mA	20 mA

VAx.x = Velocity <u>without</u> direction detection (with 1 magnet only)

VAx.x = Velocity in steps of 0.1 m/s

<u>Example: VA1.5</u>	towards start position		towards end position
	-1.5 m/s	0	+1.5 m/s
Output U2:	10 V	0.5 V	10 V
Output I1:	20 mA	4 mA	20 mA

Linearity
L02 / L02MM / L10 (for definition see "Specifications" above)

Connection
KAB2M = Cable, standard length 2 m, other lengths upon request

1. Order example: PCFP25 - 1000 - U2 - P1D - L10 - KAB2M
Flat profile, measurement range 1000 mm, 1 voltage output 0.5 ... 10 V (U2)
Output 1: Position magnet 1, decreasing signal (P1D)
Output 2: Not used

2. Order example: PCFP25 - 1000 - I1 - P1A - P2D - L10 - KAB2M
Flat profile, measurement range 1000 mm, 2 current outputs 4 ... 20 mA (I1)
Output 1: Position magnet 1, increasing signal (P1A)
Output 2: Position magnet 2, decreasing signal (P2D)

Order code position magnet (see page 6) **PCMAG5**

© ASM GmbH
info@asm-sensor.com

POSICHRON®

PCFP25

Ultra flat Profile Housing with SSI Output

Ultra flat POSICHRON® position sensor

- **Only 8 mm high and 28 mm wide**
- **Protection class up to IP67**
- **Measurement range 0 ... 100 to 0 ... 5750 mm**
- **Absolute position measurement**
- **Absolutely wear free and maintenance-free**
- **Wide variety of mounting**
- **Synchronous serial interface (SSI)**

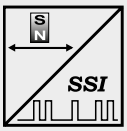

Specifications	Output	Synchronous serial (SSI)
	Resolution	5, 10, 20, 50, 100 µm
	Sampling rate	Up to 1 kHz, depending on the measurement range
	Linearity	Ranges >500 mm: L10 = ±0.10 % f.s. L02 = ±0.02 % f.s. Ranges ≤500 mm: L10 = ±0.5 mm L02MM = ±0.2 mm
	Repeatability	±3 µm
	Housing material	AlMgSi1 and plastic
	Protection class	IP64 (optional IP67)
	Shock	EN 60068-2-27:2010, 50 g 11 ms, 100 shocks
	Vibration	EN 60068-2-6:2008, 20 g 10 Hz-2 kHz, 10 cycles
	Connection	Cable 2 m
	EMC, temperature	Refer to output specification

Order Code PCFP24

PCFP25 – ☐ – ☐ – ☐ / ☐ / ☐ – ☐ – ☐

Model name

Measurement range (in mm)
100 ... 5750 (in 10 mm increments)
other lengths upon request

Resolution (in µm)
5 / 10 / 20 / 50 / 100

Output
SSI = Synchronous serial interface

Code
G / D = Gray / Dual

Number of data bits
24 / 25

Linearity
L02 / L02MM / L10 (for definition see "Specifications" above)

Connection
KAB2M = Cable, standard length 2 m, other lengths upon request

Order code mounting set (see page 6) **PCFP25-BFS1**

Order code position magnet (see page 6) **PCMAG5**

Order example: PCFP25 - 2000 - 5 - SSI/G/24 - L10 - KAB2M

© ASM GmbH
info@asm-sensor.com

POSICHRON®
PCFP25
Ultra flat Profile Housing with CAN Output

Ultra flat POSICHRON® position sensor

- **Only 8 mm high and 28 mm wide**
- **Protection class up to IP67**
- **Measurement range 0 ... 100 to 0 ... 5750 mm**
- **Absolute position measurement**
- **Absolutely wear free and maintenance-free**
- **Wide variety of mounting**
- **CANopen bus or CAN SAE J1939 output**

Specifications	Output	CANopen bus; CAN SAE J1939
	Resolution	50 µm
	Sampling rate	Up to 1 kHz, depending on the measurement range
	Linearity	Ranges >500 mm: L10 = ±0.10 % f.s. L02 = ±0.02 % f.s. Ranges ≤500 mm: L10 = ±0.5 mm L02MM = ±0.2 mm
	Repeatability	±3 µm
	Housing material	AlMgSi1 and plastic
	Protection class	IP64 (optional IP67)
	Shock	EN 60068-2-27:2010, 50 g 11 ms, 100 shocks
	Vibration	EN 60068-2-6:2008, 20 g 10 Hz-2 kHz, 10 cycles
	Connection	Cable (length 0.3 m) with 5-pin connector M12
	EMC, temperature	Refer to output specification

Order Code PCFP25

PCFP25 – ☐ – ☐ – ☐ – ☐

Model name

Measurement range (in mm)
100 ... 5750 (in 10 mm increments)
other lengths upon request

Output
CANOP = CANopen bus
CANOP/R = CANopen-Bus with integrated terminating resistance
CANJ1939 = CAN SAE J1939

Linearity
L02 / L02MM / L10 (for definition see "Specifications" above)

Connection
KAB0,3M-M12/CAN = Cable (length 0.3 m) with 5-pin M12 connector

Order code mounting set (see page 6)	**PCFP25-BFS1**
Order code position magnet (see page 6)	**PCMAG5**
Order code bus cable (see page 13)	**KAB-...M-M12/5F/G-M12/5M/G - CAN**

Order example: PCFP25 - 2000 - CANOP - L10 - KAB0,3M-M12/CAN

© ASM GmbH
info@asm-sensor.com

Outline drawing

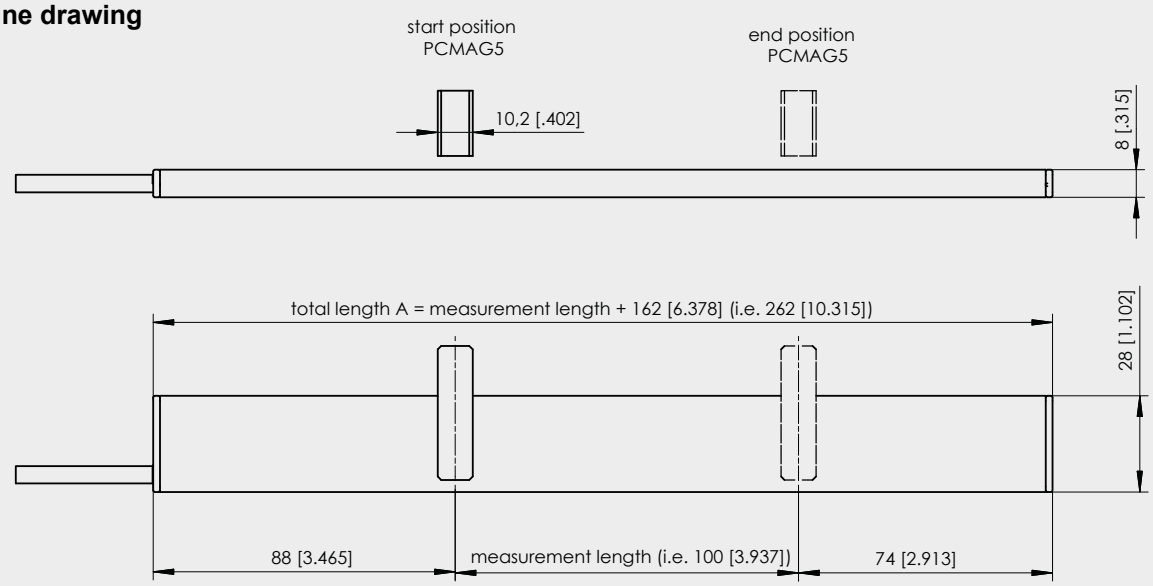

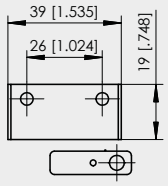

Redundant version

Horizontal arrangement

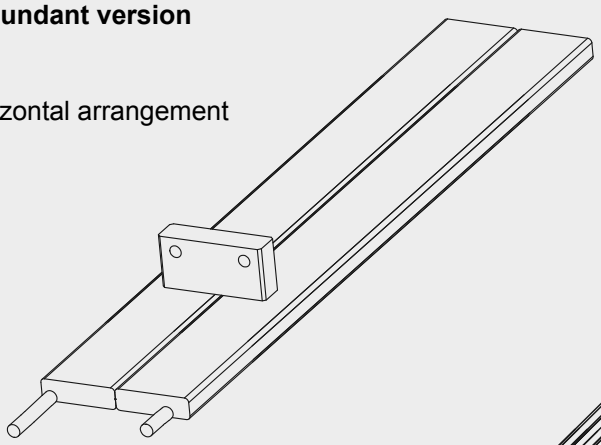

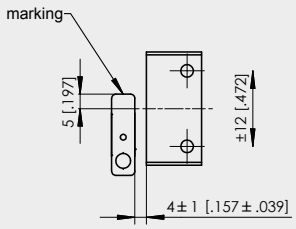

alternative magnet positions

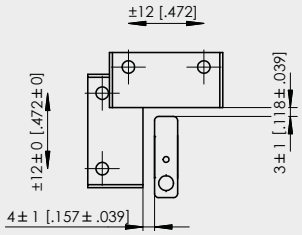

Vertical arrangement

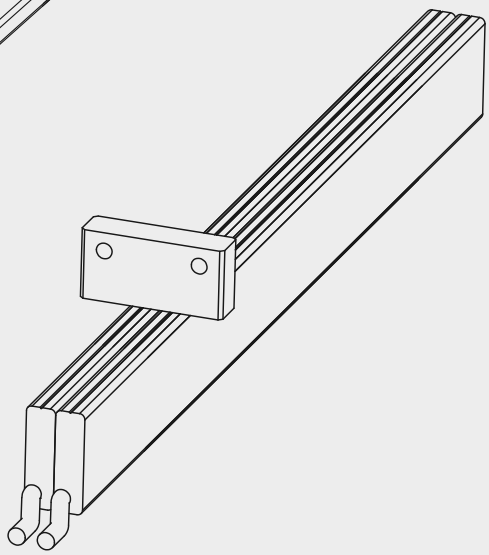

Dimensions in mm [inch]

Dimensions informative only.
For guaranteed dimensions
consult factory.

© ASM GmbH
info@asm-sensor.com

PCFP23-BFS1 and **PCFP24-BFS1**
Mounting set for PCFP23, PCFP24

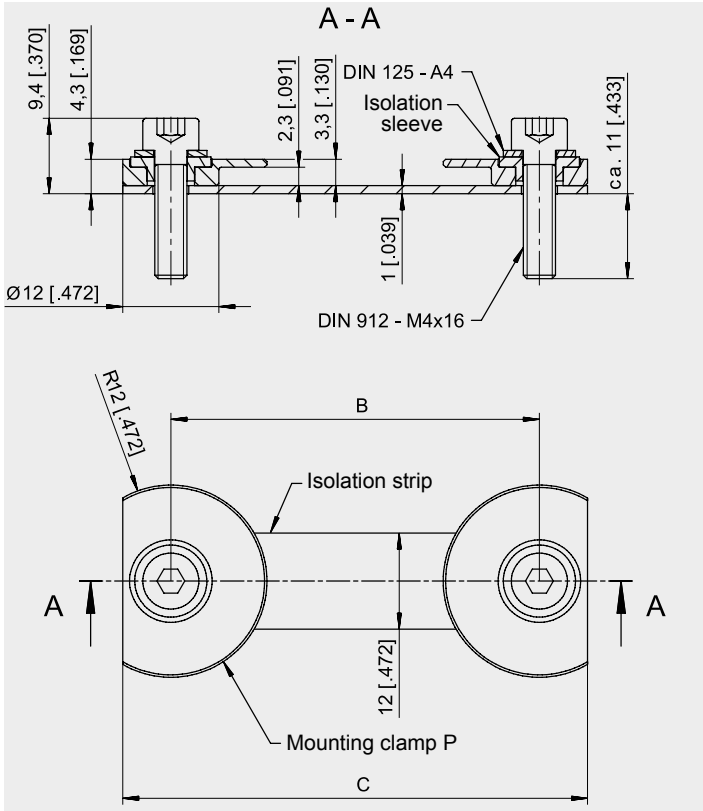

PCMAG5
Standard magnet

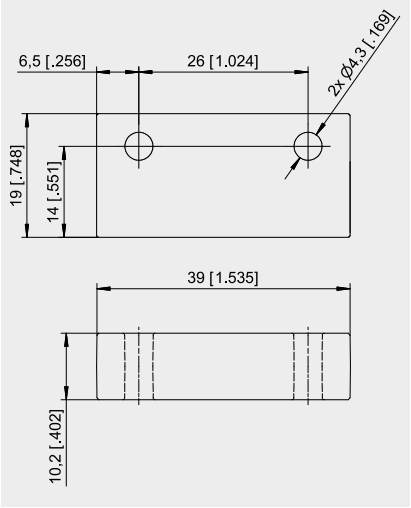

Dimensions in mm [inch]

Dimensions informative only.
For guaranteed dimensions consult factory.

Dimensions BFS1	POSICHRON Model	Dim. B [mm]	Dim. C [mm]
	PCFP23	52	64
	PCFP24	59	71

PCFP25-BFS1
Mounting set for PCFP25

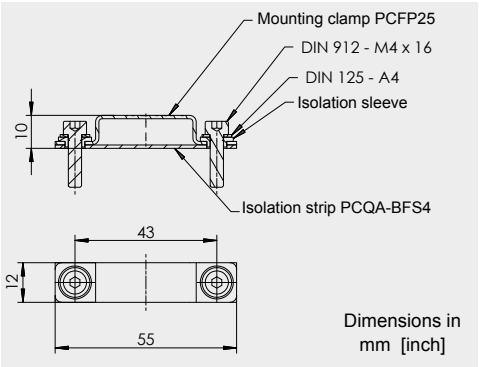

© ASM GmbH
info@asm-sensor.com

Output Specification U2, U8 and I1

Configurable, 1 or 2 channels

U1, U2, U8 Voltage output	Excitation voltage	**U1**: 18 ... 36 V DC; **U2**: 18 ... 36 V DC; **U8**: 10 ... 36 V
	Excitation current	Typ. 35 mA, 80 mA max.
	Output voltage	**U1:** 0 ... 10 V DC; **U2:** 0.5 ... 10 V DC; **U8:** 0.5 ... 4.5 V DC
	Output current	2 mA max.
	Output load	> 5 kΩ
	Resolution	16 bit f.s., min. 10 µm
	Stability (temperature)	±50 x 10^{-6} / °C f.s.
	Protection	Reverse polarity, short circuit
	Output noise	0.5 mV_{RMS}
	Operating temperature	-40 ... +85 °C
	EMC	EN 61326-1:2013

Signal diagram

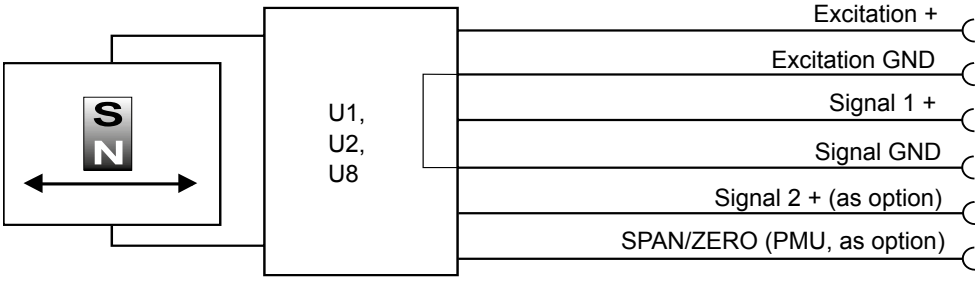

I1 Current output (3 wire)	Excitation voltage	18 ... 36 V DC (10 ... 36 V for R_L≤250Ω)
	Excitation current	Typ. 60 mA, 80 mA max.
	Load resistor	350 Ω max.
	Output current	4 ... 20 mA, 30 mA max (at failure)
	Resolution	16 bit f.s., min. 10 µm
	Stability (temperature)	±50 x 10^{-6} / °C f.s.
	Protection	Reverse polarity, short circuit
	Output noise	0.5 mV_{RMS}
	Operating temperature	-40 ... +85 °C
	EMC	EN 61326-1:2013

Signal diagram

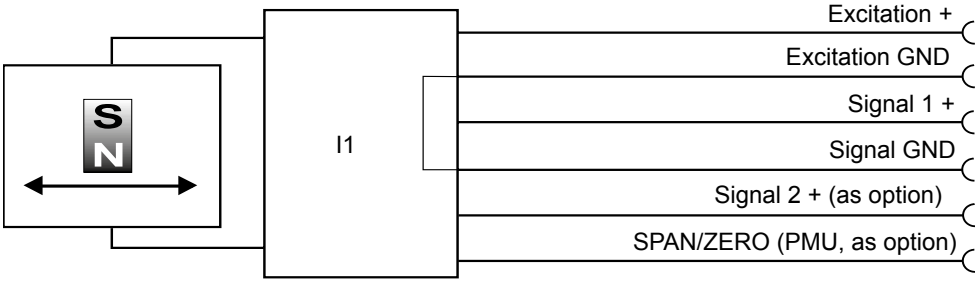

© ASM GmbH
info@asm-sensor.com

Connector M12, 8-pin
Signal wiring

Signal	Plug connection	Cable connection
Excitation +	1	white
Excitation GND	2	brown
Signal 1 +	3	green
Signal GND	4	yellow
Signal 2 + (optional)*	5	grey
*SPAN/ZERO (PMU** only, optional)*	6	pink

View to the sensor connector

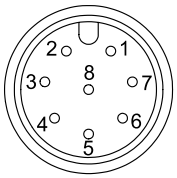

* When using multiple magnets the distance between two magnets must be min. 70 mm to identify the single magnets definitely. ** Description page 9

Connector M12, 5-pin
Signal wiring

Signal	Plug connection
Excitation +	1
Signal 1 +	2
GND	3
Signal 2 + (optional)*	4
*PMU** (optional)*	5

View to the sensor connector

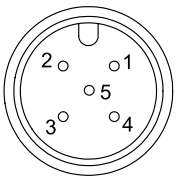

* When using multiple magnets the distance between two magnets must be min. 70 mm to identify the single magnets definitely. ** Description page 9

Connector M8, 4-pin
Signal wiring

Signal	Plug connection
Excitation +	1
Excitation GND	2
Signal +	3
*PMU** (optional)*	4

View to the sensor connector

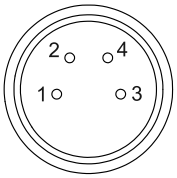

* When using multiple magnets the distance between two magnets must be min. 70 mm to identify the single magnets definitely. ** Description page 9

© ASM GmbH
info@asm-sensor.com

Option - PMU for analog output U1, U2, U8 and I1

Programming of the start and end value by the customer:

The option PMU allows to program the start value and the end value of the output range by a programming signal SPAN/ZERO available at the connector. This Signal SPAN/ZERO must be connected with GND via a push button, then position magnet of the sensor must be moved to the start resp. end position. Pushing the button between 2 and 4 seconds sets the actual position as start position, pushing the button more than 5 seconds sets the actual position as end position. The values will be stored and are available after switching off the sensor.
To reset the sensor to the factory values the button must be pushed for longer than two seconds when the sensor is switched on.

Diagnostic on analog outputs

Behaviour of the analog signal output in case of error

In case of error (magnet missing or outside the measuring range) the analog output signal will assume a state according to the following options:

Alarm_HIGH
The output voltage resp. the output current is at HIGH level (overrange).

Alarm_LOW
The output voltage resp. the output current is at LOW level (underrange).

Alarm_HOLD
The output voltage resp. the output current will keep the last valid state.

	Alarm_HIGH (standard)	**Alarm_LOW** (.../U)	**Alarm_HOLD** (.../H)
U1	$U_{out} \geq 10{,}5$ V	—	keeps last valid state (Order code **U1/H**)
U2	$U_{out} \geq 10{,}5$ V	$U_{out} < 0{,}25$ V (Order code **U2/U**)	keeps last valid state (Order code **U2/H**)
U8	$U_{out} \geq 10$ V	$U_{out} < 0{,}25$ V (Order code **U8/U**)	keeps last valid state (Order code **U8/H**)
I1	$I_{out} \geq 21$ mA	1,5 ... 2 mA (Order code **I1/U**)	keeps last valid state (Order code **I1/H**)

Error signal for SSI output

If the sensor cannot detect a magnet the position value will assume the maximum value (0xFFFFFFF).

© ASM GmbH
info@asm-sensor.com

Synchronous serial interface SSI

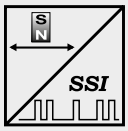

Output	RS422
Excitation voltage	10 ... 36 V DC, residual ripple 10 mV_{SS}
Excitation current	Typ. 80 mA, 150 mA max.
Clock frequency	100 kHz ... 1 MHz
Code	Gray code, dual code
Resolution	≥ 5 µm
Delay between pulse trains	>25 µs
Stability (temperature)	±50 x 10^{-6} / °C f.s.
Operating temperature	-40 ... +85 °C
EMC	EN 61326-1:2013

Description

The data transmission takes place by means of the two signals CLOCK and DATA. The processing unit (PLC, microcomputer) sends pulse sequences which clock the data transmission at the required transfer rate. With the first falling edge of the pulse sequence the position of the sensor is recorded and stored. The following rising edges control the bit-by-bit transfer of the data word. After a delay time the next new position information can be transwithted.

Data format
(Train of 26 pulses)

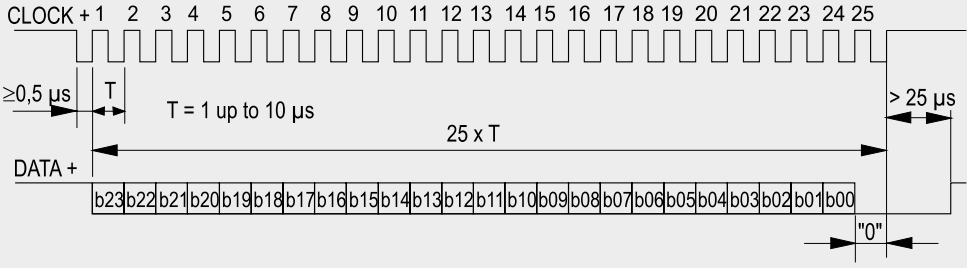

Signal diagram

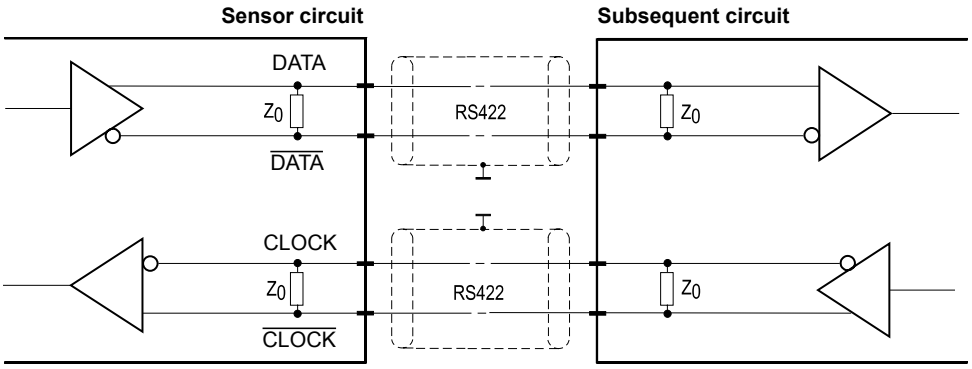

Cable length	Baud rate
50 m	100-1000 kHz
100 m	100-300 kHz

Note:
Extension of the cable length will reduce the maximum transmission rate.
The signals CLOCK/$\overline{\text{CLOCK}}$ and DATA/$\overline{\text{DATA}}$ must be connected in a twisted pair cable, common shielded.

Signal wiring

Signal	Plug connection	Cable connection
Excitation +	1	white
Excitation GND	2	brown
CLOCK	3	green
$\overline{\text{CLOCK}}$	4	yellow
DATA	5	grey
$\overline{\text{DATA}}$	6	pink

View to sensor connector

Error indication see page 9.

© ASM GmbH
info@asm-sensor.com

Description

CANopen interface with process data for position and cam functions, programmable are preset, resolution, filtering and cam switching points.

Interface CANOP

Communication profile	CANopen CiA 301 V 4.02, Slave
Encoder profile	Encoder CiA 406 V 3.2
Error Control	Node Guarding, Heartbeat, Emergency Message
Node ID	Adjustable via LSS or via object dictionary
PDO	4 TxPDO, 0 RxPDO, no linking, static mapping
PDO Modes	Event-/Time triggered, Remote-request, Sync cyclic/acyclic
SDO	1 server, 0 client
CAM	8 cams
Certified	Yes
Transmission rates	50 kBaud to 1 MBaud, adjustable via LSS or via object dictionary
Nodes	127 max.
Bus connection	M12 connector, 5 pins
Integrated bus terminating resistor	120 Ω (option)
Bus, galvanic isolated	No

Specifications

Excitation voltage	18 ... 36 V DC
Excitation current	Typ. 20 mA for 24 V, max. 80 mA
Number of position magnets	1 ... 4
Resolution	50 µm
Measuring rate	1 kHz (asynchronous)
Stability (temperature)	±50 x 10^{-6} / °C f.s.
Repeatability	1 LSB
Operating temperature	-40 ... +85 °C
Protection	Reverse polarity, short circuit
Dielectric strength	500 V (V AC, 50 Hz, 1 min.)
EMC	EN 61326-1:2013

When using multiple magnets the distance between two magnets must be min. 70 mm to identify the single magnets definitely.

Signal wiring

Signal	Plug connection
Shield	1
Excitation +	2
GND	3
CAN-H	4
CAN-L	5

View to sensor connector

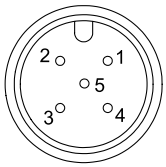

© ASM GmbH
info@asm-sensor.com

Interface J1939	CAN specification	ISO 11898, Basic and Full CAN 2.0 B
	Transceiver	24V-compliant, not isolated
	Communication profile	SAE J1939
	Baud rate	250 kbit/s
	Internal temination resistor	120 Ω (option)
	Address	Default 247d, configurable

NAME Fields	Arbitrary address capable	0	No
	Industry group	0	Global
	Vehicle system	7Fh (127d)	Non specific
	Vehicle system instance	0	
	Function	FFh (255d)	Non specific
	Function instance	0	
	ECU instance	0	
	Manufacturer	145h (325d)	Manufacturer ID
	Identity number	0nnn	Serial number 21 bit

Parameter Group Numbers (PGN)	Configuration data	PGN EF00h	Proprietary-A (PDU1 peer-to-peer)
	Process data	PGN FFnnh	Proprietary-B (PDU2 broadcast); nn Group Extension (PS) configurable

Specifications	Excitation voltage	18 ... 36 V DC
	Excitation current	Typ. 20 mA for 24 V, max. 80 mA
	Measuring rate	1 kHz (asynchronous)
	Stability (temperature)	±50 x 10^{-6} / °C f.s.
	Repeatability	1 LSB
	Operating temperature	-40 ... +85 °C
	Protection	Reverse polarity, short circuit
	Dielectric strength	500 V (V AC, 50 Hz, 1 min.)
	EMC	EN 61326-1:2013

When using multiple magnets the distance between two magnets must be min. 70 mm to identify the single magnets definitely.

Signal wiring

Signal	Plug connection
Shield	1
Excitation +	2
GND	3
CAN-H	4
CAN-L	5

View to sensor connector

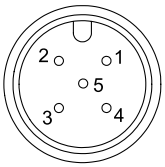

© ASM GmbH
info@asm-sensor.com

Connector/bus cable
M12, 5-pin
CAN bus
shielded

The 5-lead shielded cable is supplied with a female 5-pin M12 connector at one end and a male 5-pin M12 connector at the other end. Available lengths are 0.3 m, 2 m, 5 m and 10 m.

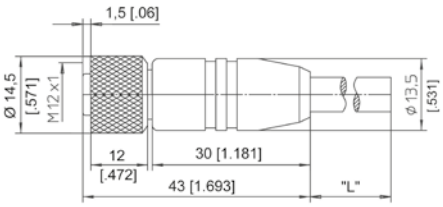

Order code:

KAB - XM - M12/5F/G - M12/5M/G - CAN

IP69K: **KAB - XM - M12/5F/G/69K - M12/5M/G/69K - CAN**

Length in m

T-piece for bus cable
M12, 5-pin
CAN bus

Order code:

KAB - TCONN - M12/5M - 2M12/5F - CAN

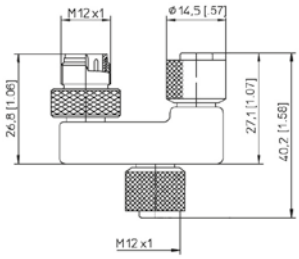

Terminating
resistance
M12, 5-pin
CAN bus

Order code:

KAB - RTERM - M12/5M/G - CAN

© ASM GmbH
info@asm-sensor.com