PCA9547

8-channel I²C-bus multiplexer with reset

Rev. 4 — 1 April 2014 Product data sheet

1. General description

The PCA9547 is an octal bidirectional translating multiplexer controlled by the I²C-bus. The SCL/SDA upstream pair fans out to eight downstream pairs, or channels. Only one SCx/SDx channel can be selected at a time, determined by the contents of the programmable control register. The device powers up with Channel 0 connected, allowing immediate communication between the master and downstream devices on that channel.

An active LOW reset input allows the PCA9547 to recover from a situation where one of the downstream I²C-buses is stuck in a LOW state. Pulling the $\overline{\text{RESET}}$ pin LOW resets the I²C-bus state machine causing all the channels to be deselected, except Channel 0 so that the master can regain control of the bus.

The pass gates of the multiplexers are constructed such that the V_{DD} pin can be used to limit the maximum high voltage which will be passed by the PCA9547. This allows the use of different bus voltages on each pair, so that 1.8 V, 2.5 V, or 3.3 V parts can communicate with 5 V parts without any additional protection. External pull-up resistors pull the bus up to the desired voltage level for each channel. All I/O pins are 5 V tolerant.

2. Features and benefits

- 1-of-8 bidirectional translating multiplexer
- I²C-bus interface logic; compatible with SMBus standards
- Active LOW $\overline{\text{RESET}}$ input
- 3 address pins allowing up to 8 devices on the I²C-bus
- Channel selection via I²C-bus, one channel at a time
- Power-up with all channels deselected except Channel 0 which is connected
- Low R_{on} multiplexers
- Allows voltage level translation between 1.8 V, 2.5 V, 3.3 V and 5 V buses
- No glitch on power-up
- Supports hot insertion
- Low standby current
- Operating power supply voltage range of 2.3 V to 5.5 V
- 5 V tolerant inputs
- 0 Hz to 400 kHz clock frequency
- ESD protection exceeds 2000 V HBM per JESD22-A114 and 1000 V CDM per JESD22-C101
- Latch-up testing is done to JEDEC Standard JESD78 which exceeds 100 mA
- Packages offered: SO24, TSSOP24, HVQFN24

3. Ordering information

Table 1. Ordering information

Type number	Topside marking	Package		
		Name	Description	Version
PCA9547D	PCA9547D	SO24	plastic small outline package; 24 leads; body width 7.5 mm	SOT137-1
PCA9547PW	PCA9547PW	TSSOP24	plastic thin shrink small outline package; 24 leads; body width 4.4 mm	SOT355-1
PCA9547BS	9547	HVQFN24	plastic thermal enhanced very thin quad flat package; no leads; 24 terminals; body 4 × 4 × 0.85 mm	SOT616-1

3.1 Ordering options

Table 2. Ordering options

Type number	Orderable part number	Package	Packing method	Minimum order quantity	Temperature range
PCA9547D	PCA9547D,112	SO24	Standard marking * IC's tube - DSC bulk pack	1200	T_{amb} = −40 °C to +85 °C
	PCA9547D,118	SO24	Reel 13" Q1/T1 *Standard mark SMD	1000	T_{amb} = −40 °C to +85 °C
PCA9547PW	PCA9547PW,112	TSSOP24	Standard marking * IC's tube - DSC bulk pack	1575	T_{amb} = −40 °C to +85 °C
	PCA9547PW,118	TSSOP24	Reel 13" Q1/T1 *Standard mark SMD	2500	T_{amb} = −40 °C to +85 °C
PCA9547BS	PCA9547BS,118	HVQFN24	Reel 13" Q1/T1 *Standard mark SMD	6000	T_{amb} = −40 °C to +85 °C

All information provided in this document is subject to legal disclaimers.

© NXP Semiconductors N.V. 2014. All rights reserved.

4. Block diagram

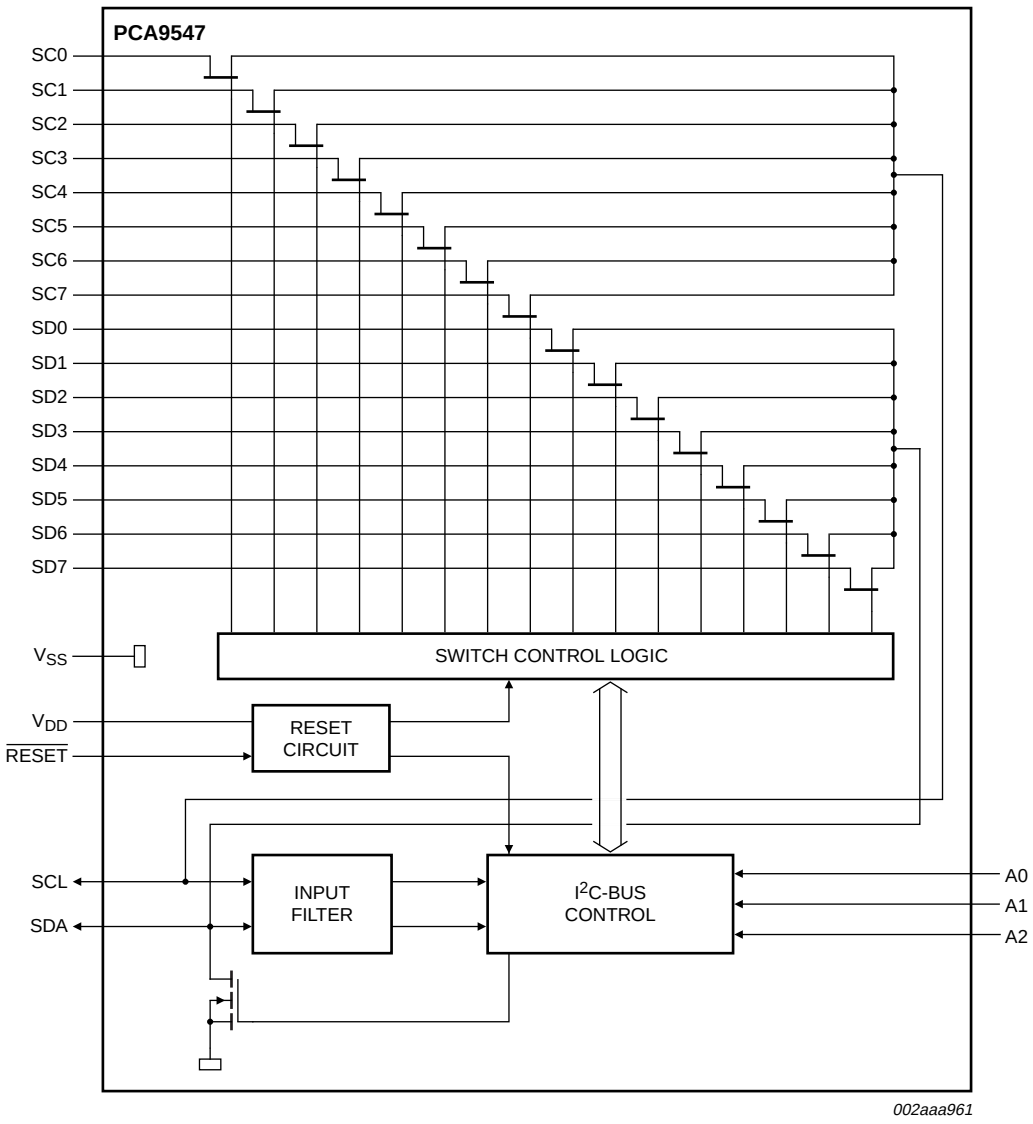

Fig 1. Block diagram of PCA9547

All information provided in this document is subject to legal disclaimers.

© NXP Semiconductors N.V. 2014. All rights reserved.

5. Pinning information

5.1 Pinning

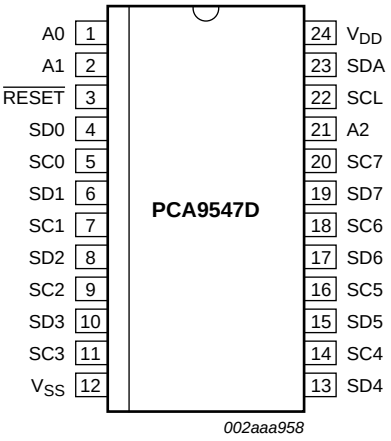

Fig 2. Pin configuration for SO24

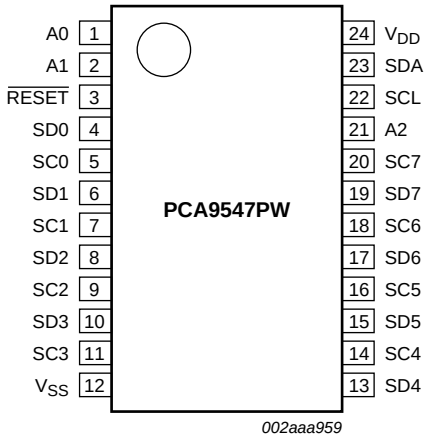

Fig 3. Pin configuration for TSSOP24

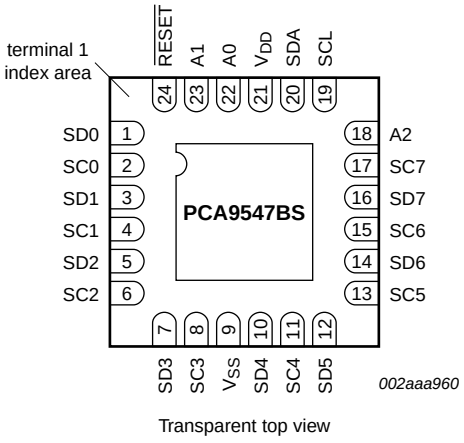

Transparent top view

Fig 4. Pin configuration for HVQFN24 (transparent top view)

All information provided in this document is subject to legal disclaimers.

© NXP Semiconductors N.V. 2014. All rights reserved.

5.2 Pin description

Table 3. Pin description

Symbol	Pin		Description
	SO24, TSSOP24	HVQFN24	
A0	1	22	address input 0
A1	2	23	address input 1
$\overline{\text{RESET}}$	3	24	active LOW reset input
SD0	4	1	serial data output 0
SC0	5	2	serial clock output 0
SD1	6	3	serial data output 1
SC1	7	4	serial clock output 1
SD2	8	5	serial data output 2
SC2	9	6	serial clock output 2
SD3	10	7	serial data output 3
SC3	11	8	serial clock output 3
V_{SS}	12	9[1]	supply ground
SD4	13	10	serial data output 4
SC4	14	11	serial clock output 4
SD5	15	12	serial data output 5
SC5	16	13	serial clock output 5
SD6	17	14	serial data output 6
SC6	18	15	serial clock output 6
SD7	19	16	serial data output 7
SC7	20	17	serial clock output 7
A2	21	18	address input 2
SCL	22	19	serial clock line
SDA	23	20	serial data line
V_{DD}	24	21	supply voltage

[1] HVQFN24 package die supply ground is connected to both the V_{SS} pin and the exposed center pad. The V_{SS} pin must be connected to supply ground for proper device operation. For enhanced thermal, electrical, and board-level performance, the exposed pad needs to be soldered to the board using a corresponding thermal pad on the board, and for proper heat conduction through the board thermal vias need to be incorporated in the PCB in the thermal pad region.

All information provided in this document is subject to legal disclaimers.

© NXP Semiconductors N.V. 2014. All rights reserved.

6. Functional description

6.1 Device addressing

Following a START condition, the bus master must output the address of the slave it is accessing. The address of the PCA9547 is shown in Figure 5. To conserve power, no internal pull-up resistors are incorporated on the hardware selectable address pins and they must be pulled HIGH or LOW.

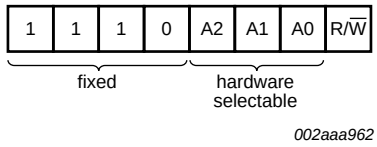

Fig 5. Slave address

The last bit of the slave address defines the operation to be performed. When set to logic 1 a read is selected, while a logic 0 selects a write operation.

6.2 Control register

Following the successful acknowledgement of the slave address, the bus master will send a byte to the PCA9547, which will be stored in the Control register. If multiple bytes are received by the PCA9547, it will save the last byte received. This register can be written and read via the I²C-bus.

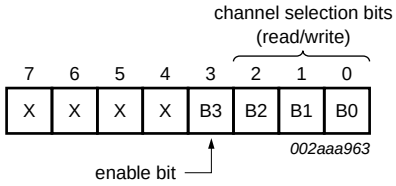

Fig 6. Control register

6.2.1 Control register definition

A SCx/SDx downstream pair, or channel, is selected by the contents of the control register. This register is written after the PCA9547 has been addressed. The 4 LSBs of the control byte are used to determine which channel is to be selected. When a channel is selected, the channel will become active after a STOP condition has been placed on the I²C-bus. This ensures that all SCx/SDx lines will be in a HIGH state when the channel is made active, so that no false conditions are generated at the time of connection.

All information provided in this document is subject to legal disclaimers.

© NXP Semiconductors N.V. 2014. All rights reserved.

Table 4. Control register

Write = channel selection; Read = channel status

D7	D6	D5	D4	B3	B2	B1	B0	Command
X	X	X	X	0	X	X	X	no channel selected
X	X	X	X	1	0	0	0	channel 0 enabled
X	X	X	X	1	0	0	1	channel 1 enabled
X	X	X	X	1	0	1	0	channel 2 enabled
X	X	X	X	1	0	1	1	channel 3 enabled
X	X	X	X	1	1	0	0	channel 4 enabled
X	X	X	X	1	1	0	1	channel 5 enabled
X	X	X	X	1	1	1	0	channel 6 enabled
X	X	X	X	1	1	1	1	channel 7 enabled
0	0	0	0	1	0	0	0	channel 0 enabled; power-up/reset default state

6.3 $\overline{\text{RESET}}$ input

The $\overline{\text{RESET}}$ input is an active LOW signal which may be used to recover from a bus fault condition. By asserting this signal LOW for a minimum of $t_{w(rst)L}$, the PCA9547 will reset its register and I²C-bus state machine and will deselect all channels except channel 0. The $\overline{\text{RESET}}$ input must be connected to V_{DD} through a pull-up resistor.

6.4 Power-on reset

When power is applied to V_{DD}, an internal Power-On Reset (POR) holds the PCA9547 in a reset condition until V_{DD} has reached V_{POR}. At this point, the reset condition is released and the PCA9547 register and I²C-bus state machine are initialized to their default states, causing all the channels to be deselected except channel 0. Thereafter, V_{DD} must be lowered below 0.2 V for at least 5 μs in order to reset the device.

All information provided in this document is subject to legal disclaimers.

© NXP Semiconductors N.V. 2014. All rights reserved.

6.5 Voltage translation

The pass gate transistors of the PCA9547 are constructed such that the V_{DD} voltage can be used to limit the maximum voltage that will be passed from one I²C-bus to another.

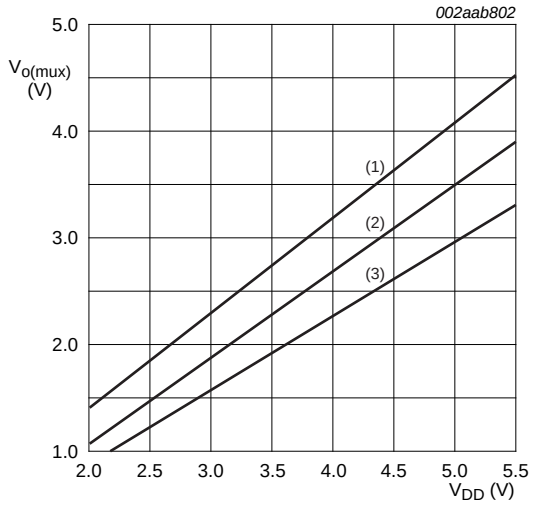

(1) maximum
(2) typical
(3) minimum

Fig 7. Pass gate voltage as a function of supply voltage

Figure 7 shows the voltage characteristics of the pass gate transistors (note that the PCA9547 is only tested at the points specified in Section 11 “Static characteristics” of this data sheet). In order for the PCA9547 to act as a voltage translator, the $V_{o(mux)}$ voltage should be equal to, or lower than the lowest bus voltage. For example, if the main bus was running at 5 V, and the downstream buses were 3.3 V and 2.7 V, then $V_{o(mux)}$ should be equal to or below 2.7 V to effectively clamp the downstream bus voltages. Looking at Figure 7, we see that $V_{o(mux)(max)}$ will be at 2.7 V when the PCA9547 supply voltage is 3.5 V or lower so the PCA9547 supply voltage could be set to 3.3 V. Pull-up resistors can then be used to bring the bus voltages to their appropriate levels (see Figure 14).

More information can be found in *Application Note AN262, PCA954X family of I²C/SMBus multiplexers and switches*.

All information provided in this document is subject to legal disclaimers.

© NXP Semiconductors N.V. 2014. All rights reserved.

7. Characteristics of the I²C-bus

The I²C-bus is for 2-way, 2-line communication between different ICs or modules. The two lines are a serial data line (SDA) and a serial clock line (SCL). Both lines must be connected to a positive supply via a pull-up resistor when connected to the output stages of a device. Data transfer may be initiated only when the bus is not busy.

7.1 Bit transfer

One data bit is transferred during each clock pulse. The data on the SDA line must remain stable during the HIGH period of the clock pulse as changes in the data line at this time will be interpreted as control signals (see Figure 8).

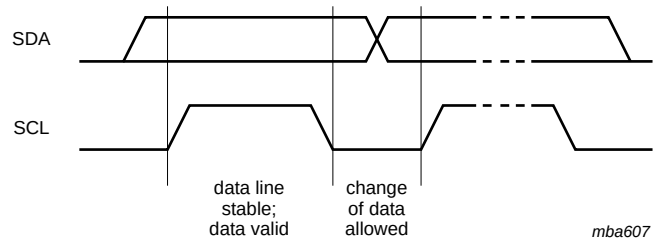

Fig 8. Bit transfer

7.1.1 START and STOP conditions

Both data and clock lines remain HIGH when the bus is not busy. A HIGH-to-LOW transition of the data line while the clock is HIGH is defined as the START condition (S). A LOW-to-HIGH transition of the data line while the clock is HIGH is defined as the STOP condition (P) (seeFigure 9.)

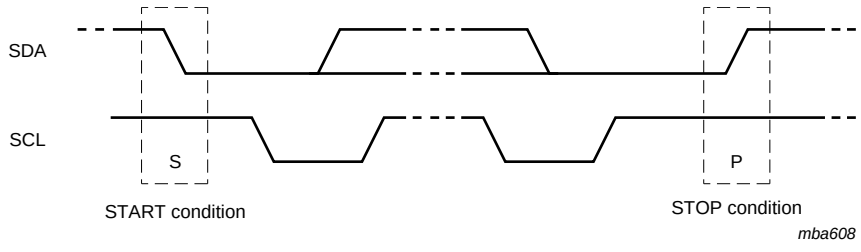

Fig 9. Definition of START and STOP conditions

All information provided in this document is subject to legal disclaimers.

© NXP Semiconductors N.V. 2014. All rights reserved.

7.2 System configuration

A device generating a message is a ‘transmitter’; a device receiving is the ‘receiver’. The device that controls the message is the ‘master’ and the devices which are controlled by the master are the ‘slaves’ (see Figure 10).

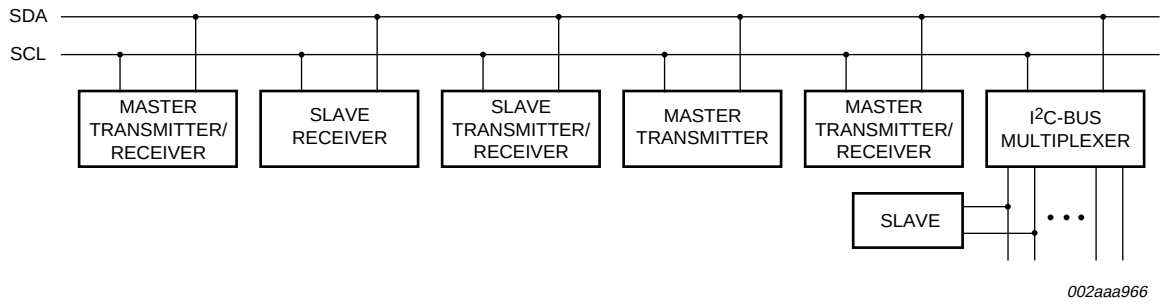

Fig 10. System configuration

7.3 Acknowledge

The number of data bytes transferred between the START and the STOP conditions from transmitter to receiver is not limited. Each byte of eight bits is followed by one acknowledge bit. The acknowledge bit is a HIGH level put on the bus by the transmitter, whereas the master generates an extra acknowledge related clock pulse.

A slave receiver which is addressed must generate an acknowledge after the reception of each byte. Also a master must generate an acknowledge after the reception of each byte that has been clocked out of the slave transmitter. The device that acknowledges has to pull down the SDA line during the acknowledge clock pulse, so that the SDA line is stable LOW during the HIGH period of the acknowledge related clock pulse; set-up and hold times must be taken into account.

A master receiver must signal an end of data to the transmitter by not generating an acknowledge on the last byte that has been clocked out of the slave. In this event, the transmitter must leave the data line HIGH to enable the master to generate a STOP condition.

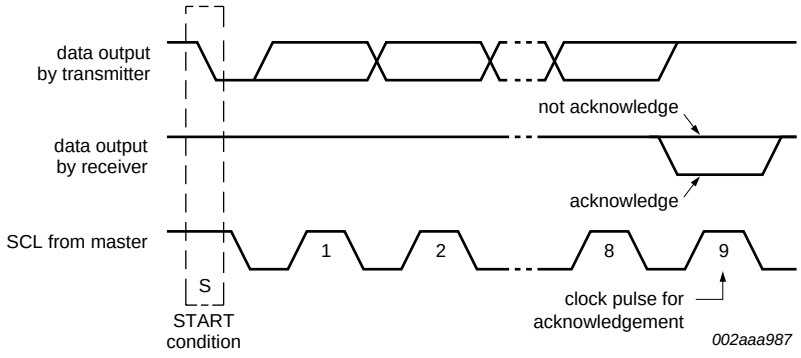

Fig 11. Acknowledgement on the I²C-bus

All information provided in this document is subject to legal disclaimers.

© NXP Semiconductors N.V. 2014. All rights reserved.

7.4 Bus transactions

Data is transmitted to the PCA9547 control register using the Write mode as shown in Figure 12.

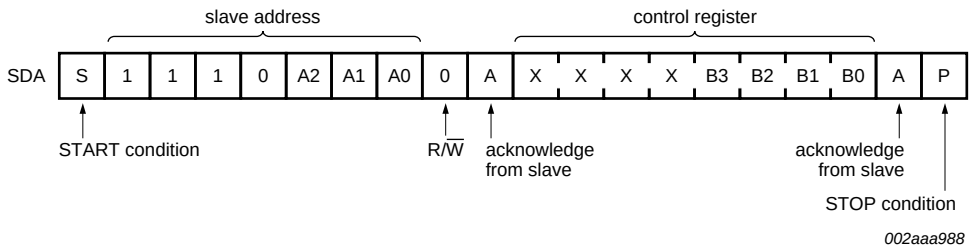

Fig 12. Write control register

Data is read from PCA9547 using the Read mode as shown in Figure 13.

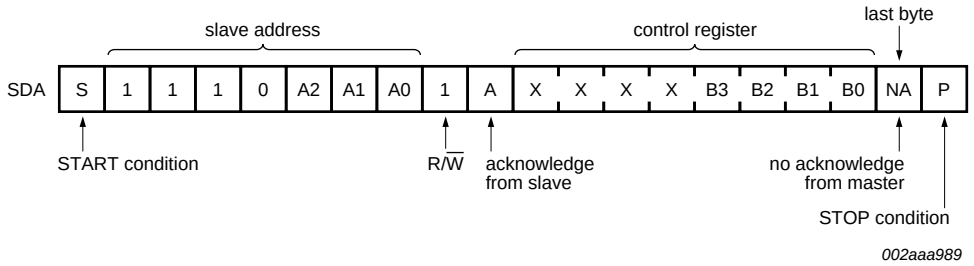

Fig 13. Read control register

All information provided in this document is subject to legal disclaimers.

© NXP Semiconductors N.V. 2014. All rights reserved.

8. Application design-in information

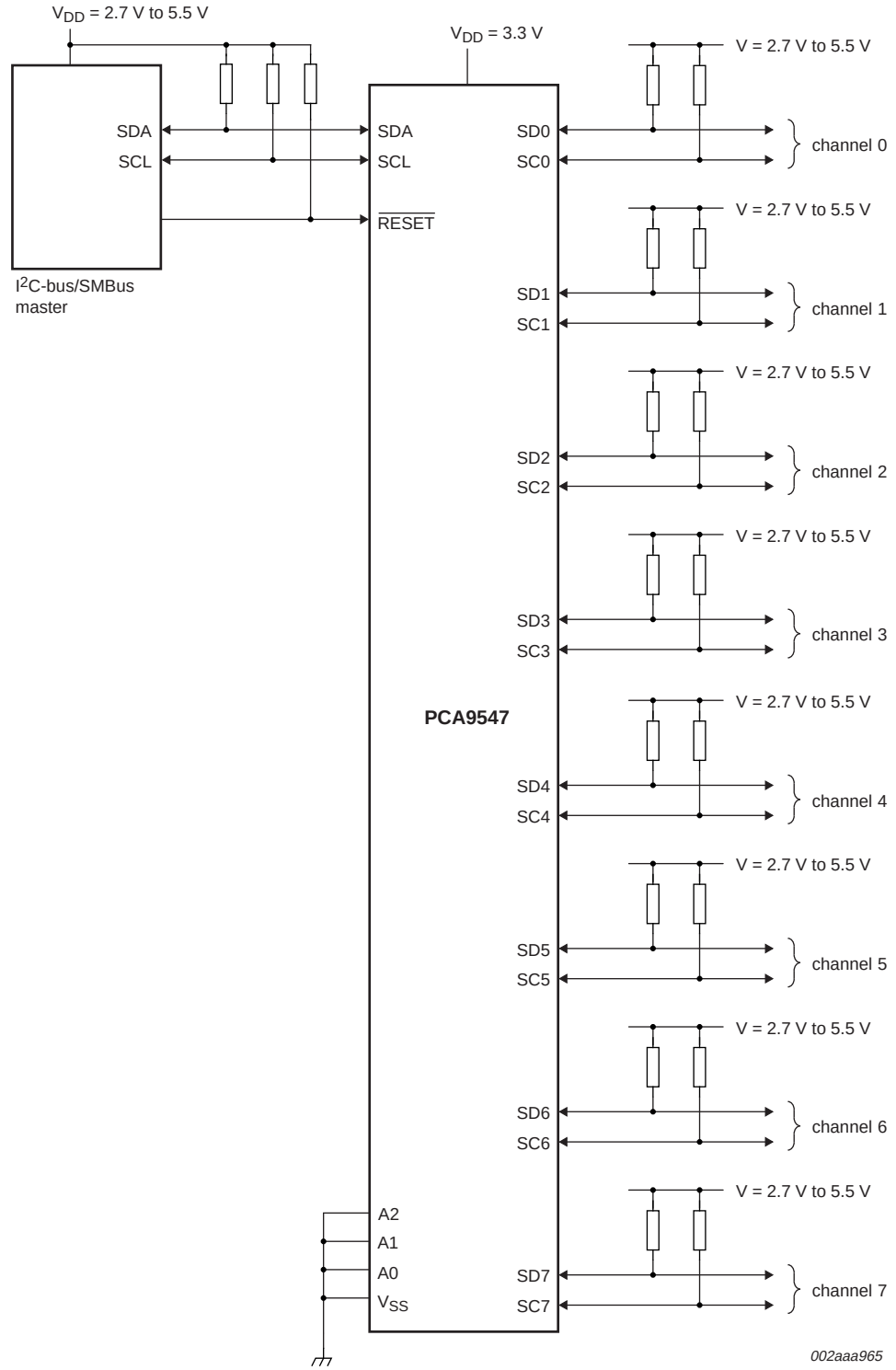

Fig 14. Typical application

All information provided in this document is subject to legal disclaimers.

© NXP Semiconductors N.V. 2014. All rights reserved.

9. Limiting values

Table 5. Limiting values

In accordance with the Absolute Maximum Rating System (IEC 60134).[1]

Symbol	Parameter	Conditions	Min	Max	Unit
V_{DD}	supply voltage		−0.5	+7.0	V
V_I	input voltage		−0.5	+7.0	V
I_I	input current		−20	+20	mA
I_O	output current		−25	+25	mA
I_{DD}	supply current		−100	+100	mA
I_{SS}	ground supply current		−100	+100	mA
P_{tot}	total power dissipation		-	400	mW
$T_{j(max)}$	maximum junction temperature	[1]	-	+125	°C
T_{stg}	storage temperature		−60	+150	°C
T_{amb}	ambient temperature		−40	+85	°C

[1] The performance capability of a high-performance integrated circuit in conjunction with its thermal environment can create junction temperatures which are detrimental to reliability. The maximum junction temperature of this integrated circuit should not exceed 125 °C.

10. Thermal characteristics

Table 6. Thermal characteristics

Symbol	Parameter	Conditions	Typ	Unit
$R_{th(j-a)}$	thermal resistance from junction to ambient	HVQFN24 package	40	°C/W
		SO24 package	77	°C/W
		TSSOP24 package	128	°C/W

All information provided in this document is subject to legal disclaimers.

© NXP Semiconductors N.V. 2014. All rights reserved.

11. Static characteristics

Table 7. Static characteristics at V_{DD} = 2.3 V to 3.6 V

V_{SS} = 0 V; T_{amb} = −40 °C to +85 °C; unless otherwise specified. See Table 8 on page 15 for V_{DD} = 4.5 V to 5.5 V.[1]

Symbol	Parameter	Conditions	Min	Typ	Max	Unit
Supply						
V_{DD}	supply voltage		2.3	-	3.6	V
I_{DD}	supply current	operating mode; V_{DD} = 3.6 V; no load; $V_I = V_{DD}$ or V_{SS}; f_{SCL} = 100 kHz	-	20	50	μA
I_{stb}	standby current	Standby mode; V_{DD} = 3.6 V; no load; $V_I = V_{DD}$ or V_{SS}	-	0.1	2	μA
V_{POR}	power-on reset voltage	no load; $V_I = V_{DD}$ or V_{SS} [2]	-	1.6	2.1	V
Input SCL; input/output SDA						
V_{IL}	LOW-level input voltage		−0.5	-	$+0.3V_{DD}$	V
V_{IH}	HIGH-level input voltage		$0.7V_{DD}$	-	6	V
I_{OL}	LOW-level output current	V_{OL} = 0.4 V	3	-	-	mA
		V_{OL} = 0.6 V	6	-	-	mA
I_L	leakage current	$V_I = V_{DD}$ or V_{SS}	−1	-	+1	μA
C_i	input capacitance	$V_I = V_{SS}$	-	14	19	pF
Select inputs A0, A1, A2, $\overline{\text{RESET}}$						
V_{IL}	LOW-level input voltage		−0.5	-	$+0.3V_{DD}$	V
V_{IH}	HIGH-level input voltage		$0.7V_{DD}$	-	6	V
I_{LI}	input leakage current	pin at V_{DD} or V_{SS}	−1	-	+1	μA
C_i	input capacitance	$V_I = V_{SS}$	-	2	5	pF
Pass gate						
R_{on}	ON-state resistance	multiplexer; V_{DD} = 3.6 V; V_O = 0.4 V; I_O = 15 mA	5	11	30	Ω
		multiplexer; V_{DD} = 2.3 V to 2.7 V; V_O = 0.4 V; I_O = 10 mA	7	16	55	Ω
$V_{o(mux)}$	multiplexer output voltage	$V_{i(mux)} = V_{DD}$ = 3.3 V; $I_{o(mux)}$ = −100 μA	-	1.9	-	V
		$V_{i(mux)} = V_{DD}$ = 3.0 V to 3.6 V; $I_{o(mux)}$ = −100 μA	1.6	-	2.8	V
		$V_{o(mux)} = V_{DD}$ = 2.5 V; $I_{o(mux)}$ = −100 μA	-	1.5	-	V
		$V_{o(mux)} = V_{DD}$ = 2.3 V to 2.7 V; $I_{o(mux)}$ = −100 μA	0.9	-	2.0	V
I_L	leakage current	$V_I = V_{DD}$ or V_{SS}	−1	-	+1	μA
C_{io}	input/output capacitance	$V_I = V_{SS}$	-	3	5	pF

[1] For operation between published voltage ranges, refer to the worst-case parameter in both ranges.

[2] V_{DD} must be lowered to 0.2 V for at least 5 μs in order to reset part.

All information provided in this document is subject to legal disclaimers.

© NXP Semiconductors N.V. 2014. All rights reserved.

Table 8. Static characteristics at V_{DD} = 4.5 V to 5.5 V

V_{SS} = 0 V; T_{amb} = −40 °C to +85 °C; unless otherwise specified. See Table 7 on page 14 for V_{DD} = 2.3 V to 3.6 V.[1]

Symbol	Parameter	Conditions	Min	Typ	Max	Unit
Supply						
V_{DD}	supply voltage		4.5	-	5.5	V
I_{DD}	supply current	operating mode; V_{DD} = 5.5 V; no load; V_I = V_{DD} or V_{SS}; f_{SCL} = 100 kHz	-	65	100	μA
I_{stb}	standby current	Standby mode; V_{DD} = 5.5 V; no load; V_I = V_{DD} or V_{SS}	-	0.6	2	μA
V_{POR}	power-on reset voltage	no load; V_I = V_{DD} or V_{SS} [2]	-	1.7	2.1	V
Input SCL; input/output SDA						
V_{IL}	LOW-level input voltage		−0.5	-	+0.3V_{DD}	V
V_{IH}	HIGH-level input voltage		0.7V_{DD}	-	6	V
I_{OL}	LOW-level output current	V_{OL} = 0.4 V	3	-	-	mA
		V_{OL} = 0.6 V	6	-	-	mA
I_{IL}	LOW-level input current	V_I = V_{SS}	−1	-	+1	μA
I_{IH}	HIGH-level input current	V_I = V_{SS}	−1	-	+1	μA
C_i	input capacitance	V_I = V_{SS}	-	14	19	pF
Select inputs A0, A1, A2, $\overline{\text{RESET}}$						
V_{IL}	LOW-level input voltage		−0.5	-	+0.3V_{DD}	V
V_{IH}	HIGH-level input voltage		0.7V_{DD}	-	6	V
I_{LI}	input leakage current	pin at V_{DD} or V_{SS}	−1	-	+1	μA
C_i	input capacitance	V_I = V_{SS}	-	2	5	pF
Pass gate						
R_{on}	ON-state resistance	multiplexer; V_{DD} = 4.5 V to 5.5 V; V_O = 0.4 V; I_O = 15 mA	4	9	24	Ω
$V_{o(mux)}$	multiplexer output voltage	$V_{i(mux)}$ = V_{DD} = 5.0 V; $I_{o(mux)}$ = −100 μA	-	3.6	-	V
		$V_{i(mux)}$ = V_{DD} = 4.5 V to 5.5 V; $I_{o(mux)}$ = −100 μA	2.6	-	4.5	V
I_L	leakage current	V_I = V_{DD} or V_{SS}	−1	-	+1	μA
C_{io}	input/output capacitance	V_I = V_{SS}	-	3	5	pF

[1] For operation between published voltage ranges, refer to the worst-case parameter in both ranges.

[2] V_{DD} must be lowered to 0.2 V for at least 5 μs in order to reset part.

All information provided in this document is subject to legal disclaimers.

© NXP Semiconductors N.V. 2014. All rights reserved.

12. Dynamic characteristics

Table 9. Dynamic characteristics

Symbol	Parameter	Conditions	Standard-mode I²C-bus		Fast-mode I²C-bus		Unit
			Min	Max	Min	Max	
t_{PD}	propagation delay	from SDA to SDx, or SCL to SCx	-	0.3[1]	-	0.3[1]	ns
f_{SCL}	SCL clock frequency		0	100	0	400	kHz
t_{BUF}	bus free time between a STOP and START condition		4.7	-	1.3	-	µs
$t_{HD;STA}$	hold time (repeated) START condition	[2]	4.0	-	0.6	-	µs
t_{LOW}	LOW period of the SCL clock		4.7	-	1.3	-	µs
t_{HIGH}	HIGH period of the SCL clock		4.0	-	0.6	-	µs
$t_{SU;STA}$	set-up time for a repeated START condition		4.7	-	0.6	-	µs
$t_{SU;STO}$	set-up time for STOP condition		4.0	-	0.6	-	µs
$t_{HD;DAT}$	data hold time		0[3]	3.45	0[3]	0.9	µs
$t_{SU;DAT}$	data set-up time		250	-	100	-	ns
t_r	rise time of both SDA and SCL signals		-	1000	$20 + 0.1C_b$[4]	300	ns
t_f	fall time of both SDA and SCL signals		-	300	$20 + 0.1C_b$[4]	300	ns
C_b	capacitive load for each bus line		-	400	-	400	pF
t_{SP}	pulse width of spikes that must be suppressed by the input filter		-	50	-	50	ns
$t_{VD;DAT}$	data valid time	HIGH-to-LOW [5]	-	1	-	1	µs
		LOW-to-HIGH [5]	-	0.6	-	0.6	µs
$t_{VD;ACK}$	data valid acknowledge time		-	1	-	1	µs
RESET							
$t_{w(rst)L}$	LOW-level reset time		4	-	4	-	ns
t_{rst}	reset time	SDA clear	500	-	500	-	ns
$t_{rec(rst)}$	reset recovery time		0	-	0	-	ns

[1] Pass gate propagation delay is calculated from the 20 Ω typical R_{on} and the 15 pF load capacitance.

[2] After this period, the first clock pulse is generated.

[3] A device must internally provide a hold time of at least 300 ns for the SDA signal (referred to the $V_{IH(min)}$ of the SCL signal) in order to bridge the undefined region of the falling edge of SCL.

[4] C_b = total capacitance of one bus line in pF.

[5] Measurements taken with 1 kΩ pull-up resistor and 50 pF load.

All information provided in this document is subject to legal disclaimers.

© NXP Semiconductors N.V. 2014. All rights reserved.

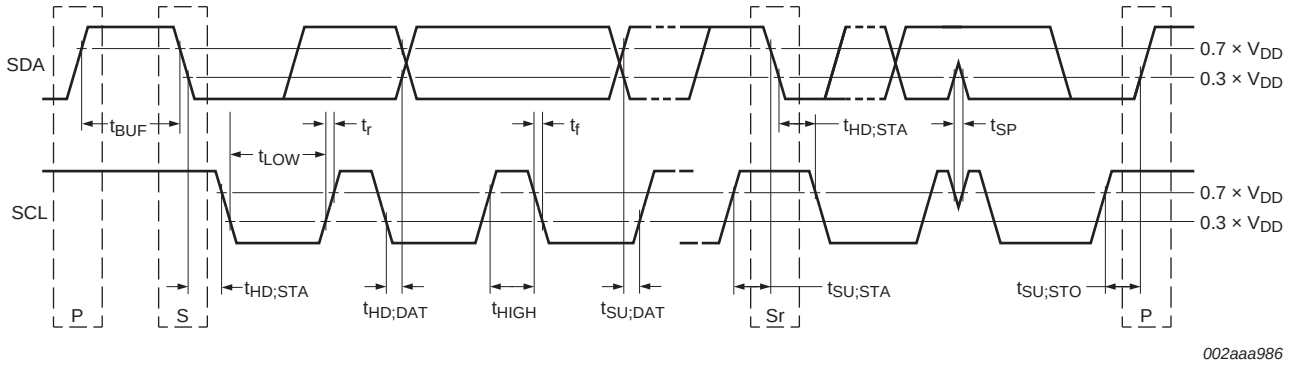

Fig 15. Definition of timing on the I²C-bus

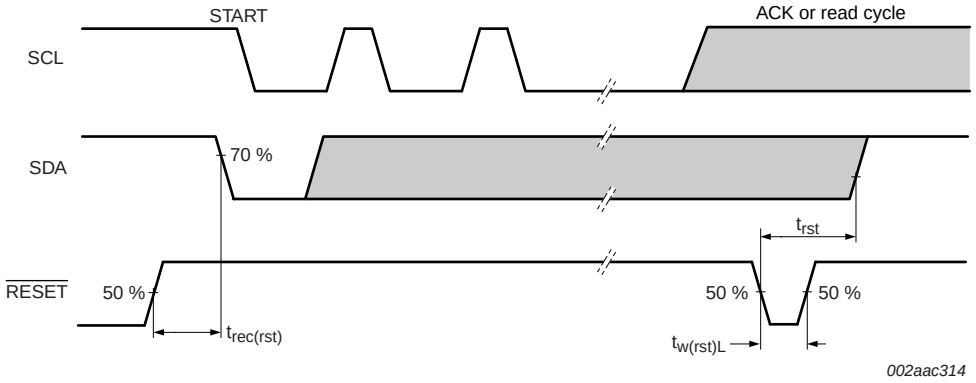

Fig 16. Definition of $\overline{\text{RESET}}$ timing

All information provided in this document is subject to legal disclaimers.

© NXP Semiconductors N.V. 2014. All rights reserved.

13. Package outline

SO24: plastic small outline package; 24 leads; body width 7.5 mm **SOT137-1**

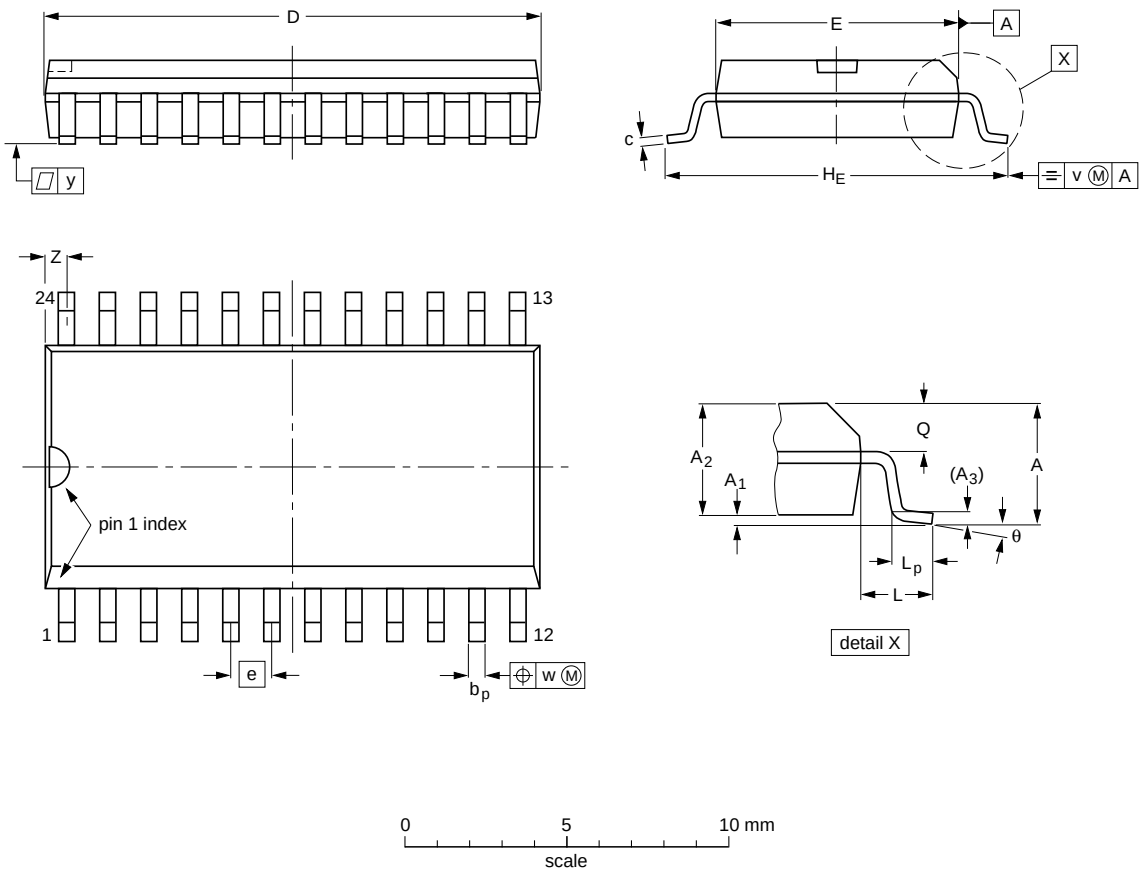

DIMENSIONS (inch dimensions are derived from the original mm dimensions)

UNIT	A max.	A_1	A_2	A_3	b_p	c	D (1)	E (1)	e	H_E	L	L_p	Q	v	w	y	Z (1)	θ
mm	2.65	0.3 0.1	2.45 2.25	0.25	0.49 0.36	0.32 0.23	15.6 15.2	7.6 7.4	1.27	10.65 10.00	1.4	1.1 0.4	1.1 1.0	0.25	0.25	0.1	0.9 0.4	8° 0°
inches	0.1	0.012 0.004	0.096 0.089	0.01	0.019 0.014	0.013 0.009	0.61 0.60	0.30 0.29	0.05	0.419 0.394	0.055	0.043 0.016	0.043 0.039	0.01	0.01	0.004	0.035 0.016	

Note

1. Plastic or metal protrusions of 0.15 mm (0.006 inch) maximum per side are not included.

OUTLINE VERSION	REFERENCES				EUROPEAN PROJECTION	ISSUE DATE
	IEC	JEDEC	JEITA			
SOT137-1	075E05	MS-013				~~99-12-27~~ 03-02-19

Fig 17. SO24 package outline (SOT137-1)

All information provided in this document is subject to legal disclaimers.

© NXP Semiconductors N.V. 2014. All rights reserved.

TSSOP24: plastic thin shrink small outline package; 24 leads; body width 4.4 mm **SOT355-1**

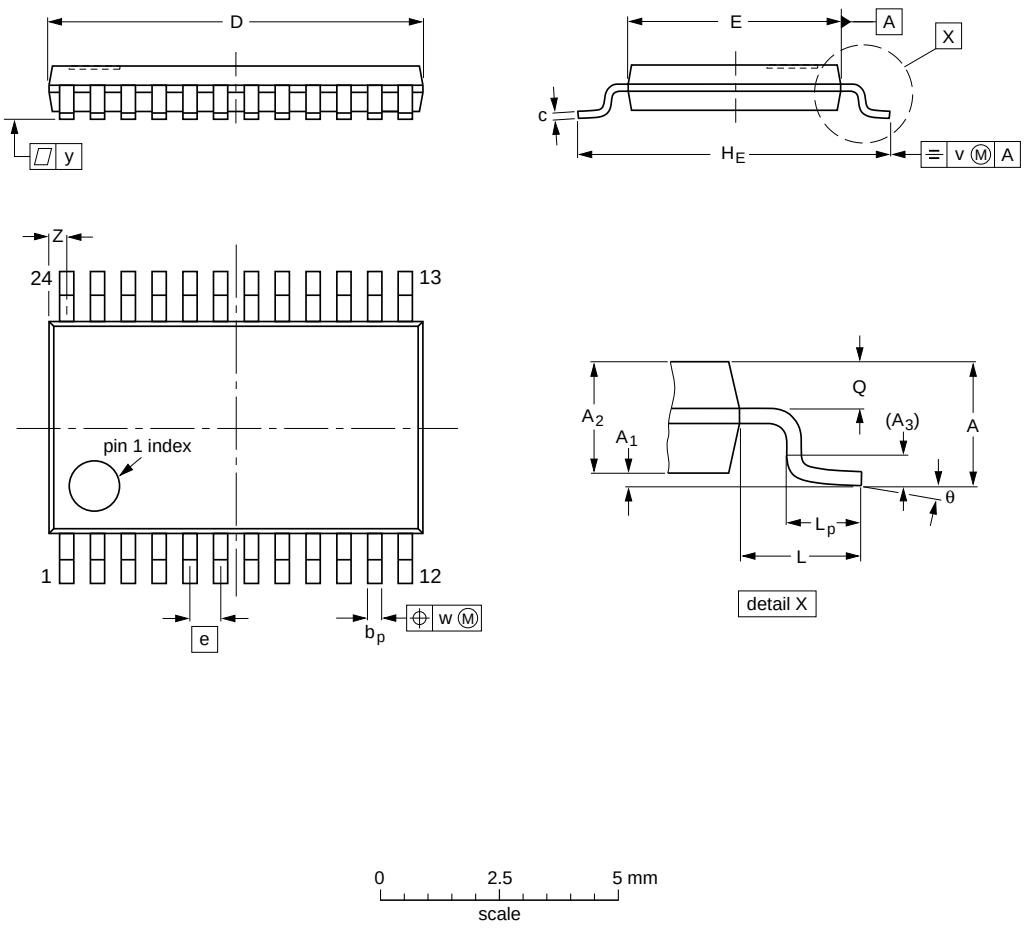

DIMENSIONS (mm are the original dimensions)

UNIT	A max.	A_1	A_2	A_3	b_p	c	$D^{(1)}$	$E^{(2)}$	e	H_E	L	L_p	Q	v	w	y	$Z^{(1)}$	θ
mm	1.1	0.15 0.05	0.95 0.80	0.25	0.30 0.19	0.2 0.1	7.9 7.7	4.5 4.3	0.65	6.6 6.2	1	0.75 0.50	0.4 0.3	0.2	0.13	0.1	0.5 0.2	8° 0°

Notes

1. Plastic or metal protrusions of 0.15 mm maximum per side are not included.
2. Plastic interlead protrusions of 0.25 mm maximum per side are not included.

OUTLINE VERSION	REFERENCES				EUROPEAN PROJECTION	ISSUE DATE
	IEC	JEDEC	JEITA			
SOT355-1		MO-153				~~99-12-27~~ 03-02-19

Fig 18. TSSOP24 package outline (SOT355-1)

All information provided in this document is subject to legal disclaimers.

© NXP Semiconductors N.V. 2014. All rights reserved.

HVQFN24: plastic thermal enhanced very thin quad flat package; no leads; 24 terminals; body 4 x 4 x 0.85 mm **SOT616-1**

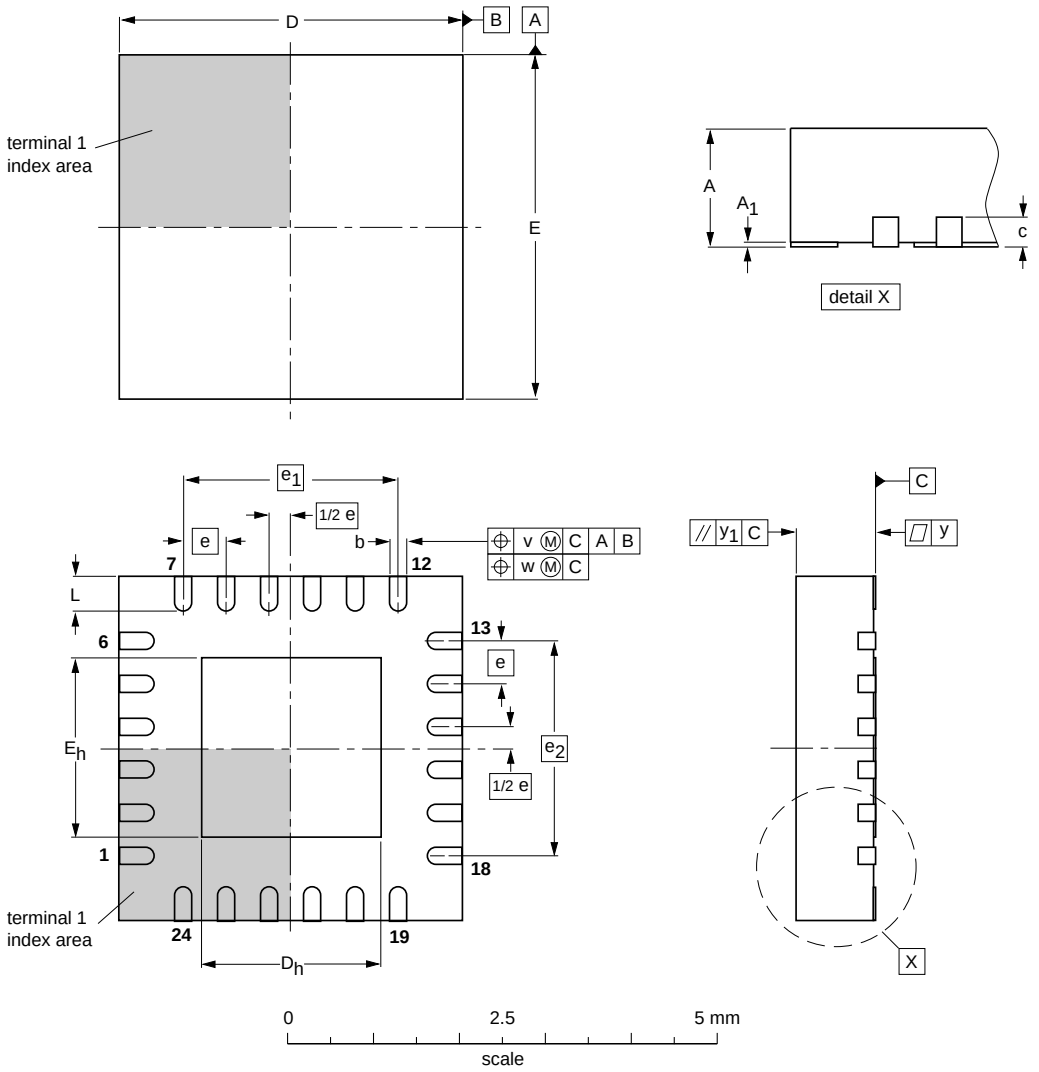

DIMENSIONS (mm are the original dimensions)

UNIT	A(1) max.	A_1	b	c	D(1)	D_h	E(1)	E_h	e	e_1	e_2	L	v	w	y	y_1
mm	1	0.05 0.00	0.30 0.18	0.2	4.1 3.9	2.25 1.95	4.1 3.9	2.25 1.95	0.5	2.5	2.5	0.5 0.3	0.1	0.05	0.05	0.1

Note

1. Plastic or metal protrusions of 0.075 mm maximum per side are not included.

OUTLINE VERSION	REFERENCES				EUROPEAN PROJECTION	ISSUE DATE
	IEC	JEDEC	JEITA			
SOT616-1	- - -	MO-220	- - -			~~01-08-08~~ 02-10-22

Fig 19. HVQFN24 package outline (SOT616-1)

All information provided in this document is subject to legal disclaimers.

© NXP Semiconductors N.V. 2014. All rights reserved.

14. Soldering of SMD packages

This text provides a very brief insight into a complex technology. A more in-depth account of soldering ICs can be found in Application Note *AN10365 "Surface mount reflow soldering description"*.

14.1 Introduction to soldering

Soldering is one of the most common methods through which packages are attached to Printed Circuit Boards (PCBs), to form electrical circuits. The soldered joint provides both the mechanical and the electrical connection. There is no single soldering method that is ideal for all IC packages. Wave soldering is often preferred when through-hole and Surface Mount Devices (SMDs) are mixed on one printed wiring board; however, it is not suitable for fine pitch SMDs. Reflow soldering is ideal for the small pitches and high densities that come with increased miniaturization.

14.2 Wave and reflow soldering

Wave soldering is a joining technology in which the joints are made by solder coming from a standing wave of liquid solder. The wave soldering process is suitable for the following:

- Through-hole components
- Leaded or leadless SMDs, which are glued to the surface of the printed circuit board

Not all SMDs can be wave soldered. Packages with solder balls, and some leadless packages which have solder lands underneath the body, cannot be wave soldered. Also, leaded SMDs with leads having a pitch smaller than ~0.6 mm cannot be wave soldered, due to an increased probability of bridging.

The reflow soldering process involves applying solder paste to a board, followed by component placement and exposure to a temperature profile. Leaded packages, packages with solder balls, and leadless packages are all reflow solderable.

Key characteristics in both wave and reflow soldering are:

- Board specifications, including the board finish, solder masks and vias
- Package footprints, including solder thieves and orientation
- The moisture sensitivity level of the packages
- Package placement
- Inspection and repair
- Lead-free soldering versus SnPb soldering

14.3 Wave soldering

Key characteristics in wave soldering are:

- Process issues, such as application of adhesive and flux, clinching of leads, board transport, the solder wave parameters, and the time during which components are exposed to the wave
- Solder bath specifications, including temperature and impurities

All information provided in this document is subject to legal disclaimers.

© NXP Semiconductors N.V. 2014. All rights reserved.

14.4 Reflow soldering

Key characteristics in reflow soldering are:

- Lead-free versus SnPb soldering; note that a lead-free reflow process usually leads to higher minimum peak temperatures (see Figure 20) than a SnPb process, thus reducing the process window
- Solder paste printing issues including smearing, release, and adjusting the process window for a mix of large and small components on one board
- Reflow temperature profile; this profile includes preheat, reflow (in which the board is heated to the peak temperature) and cooling down. It is imperative that the peak temperature is high enough for the solder to make reliable solder joints (a solder paste characteristic). In addition, the peak temperature must be low enough that the packages and/or boards are not damaged. The peak temperature of the package depends on package thickness and volume and is classified in accordance with Table 10 and 11

Table 10. SnPb eutectic process (from J-STD-020D)

Package thickness (mm)	Package reflow temperature (°C)	
	Volume (mm³)	
	< 350	≥ 350
< 2.5	235	220
≥ 2.5	220	220

Table 11. Lead-free process (from J-STD-020D)

Package thickness (mm)	Package reflow temperature (°C)		
	Volume (mm³)		
	< 350	350 to 2000	> 2000
< 1.6	260	260	260
1.6 to 2.5	260	250	245
> 2.5	250	245	245

Moisture sensitivity precautions, as indicated on the packing, must be respected at all times.

Studies have shown that small packages reach higher temperatures during reflow soldering, see Figure 20.

All information provided in this document is subject to legal disclaimers.

© NXP Semiconductors N.V. 2014. All rights reserved.

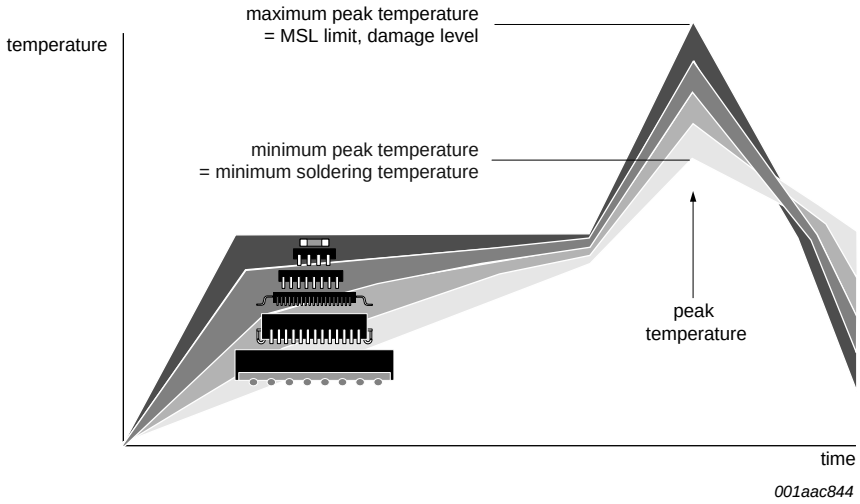

MSL: Moisture Sensitivity Level

Fig 20. Temperature profiles for large and small components

For further information on temperature profiles, refer to Application Note *AN10365 "Surface mount reflow soldering description"*.

All information provided in this document is subject to legal disclaimers.

© NXP Semiconductors N.V. 2014. All rights reserved.

15. Soldering: PCB footprints

Footprint information for reflow soldering of SO24 package **SOT137-1**

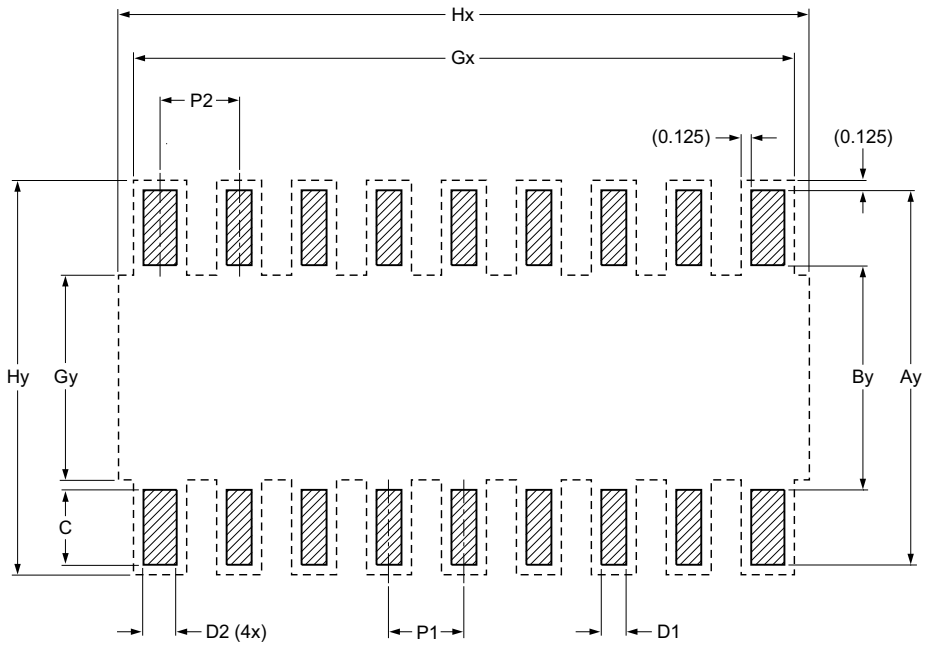

Generic footprint pattern

Refer to the package outline drawing for actual layout

solder land

occupied area

DIMENSIONS in mm

P1	P2	Ay	By	C	D1	D2	Gx	Gy	Hx	Hy
1.270	1.320	11.200	6.400	2.400	0.700	0.800	15.120	8.600	17.000	11.450

sot137-1_fr

Fig 21. PCB footprint for SOT137-1 (SO24); reflow soldering

All information provided in this document is subject to legal disclaimers.

© NXP Semiconductors N.V. 2014. All rights reserved.

Footprint information for reflow soldering of TSSOP24 package **SOT355-1**

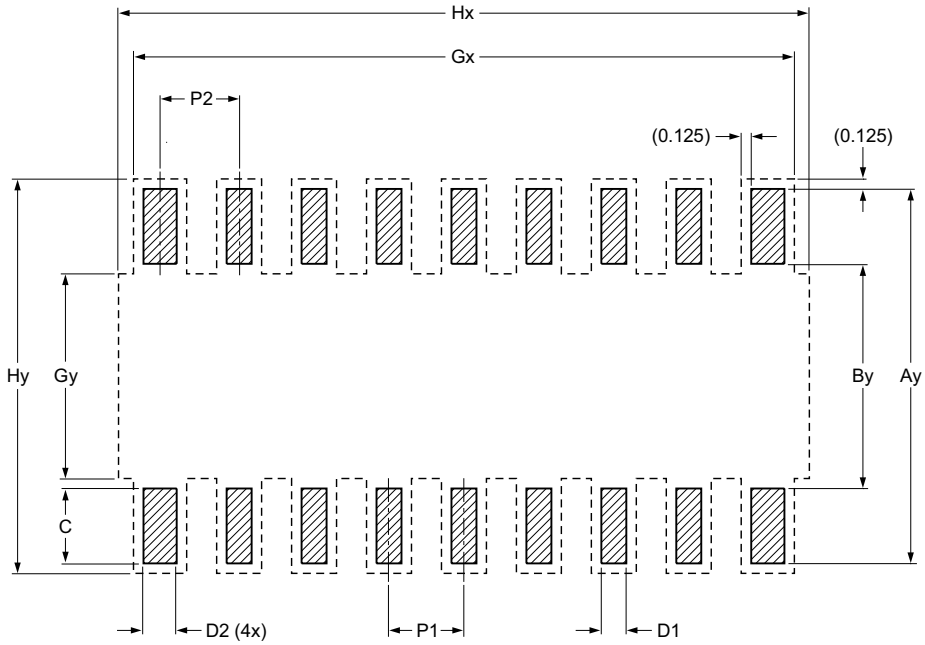

Generic footprint pattern

Refer to the package outline drawing for actual layout

solder land

occupied area

DIMENSIONS in mm

P1	P2	Ay	By	C	D1	D2	Gx	Gy	Hx	Hy
0.650	0.750	7.200	4.500	1.350	0.400	0.600	8.200	5.300	8.600	7.450

sot355-1_fr

Fig 22. PCB footprint for SOT355-1 (TSSOP24); reflow soldering

All information provided in this document is subject to legal disclaimers.

© NXP Semiconductors N.V. 2014. All rights reserved.

Footprint information for reflow soldering of HVQFN24 package **SOT616-1**

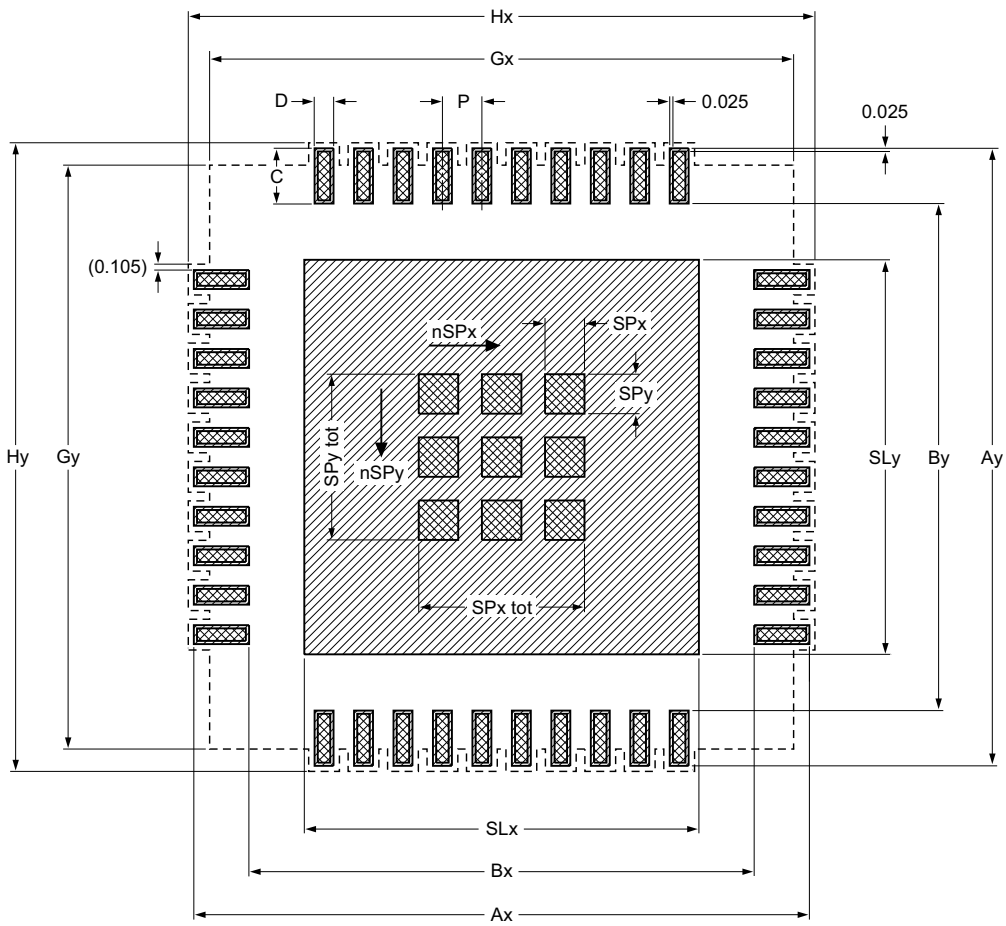

Generic footprint pattern

Refer to the package outline drawing for actual layout

solder land

solder paste deposit

solder land plus solder paste

occupied area

nSPx	nSPy
2	2

Dimensions in mm

P	Ax	Ay	Bx	By	C	D	SLx	SLy	SPx tot	SPy tot	SPx	SPy	Gx	Gy	Hx	Hy
0.500	5.000	5.000	3.200	3.200	0.900	0.240	2.100	2.100	1.200	1.200	0.450	0.450	4.300	4.300	5.250	5.250

Issue date ~~07-05-07~~ 09-06-15 *sot616-1_fr*

Fig 23. PCB footprint for SOT616-1; reflow soldering

All information provided in this document is subject to legal disclaimers.

© NXP Semiconductors N.V. 2014. All rights reserved.

16. Abbreviations

Table 12. Abbreviations

Acronym	Description
CDM	Charged Device Model
ESD	ElectroStatic Discharge
HBM	Human Body Model
I^2C-bus	Inter-Integrated Circuit bus
I/O	Input/Output
LSB	Least Significant Bit
PCB	Printed-Circuit Board
SMBus	System Management Bus

17. Revision history

Table 13. Revision history

Document ID	Release date	Data sheet status	Change notice	Supersedes
PCA9547 v.4	20140401	Product data sheet	-	PCA9547 v.3
Modifications:	• Section 2 “Features and benefits”, 15th bullet item: deleted phrase “200 V MM per JESD22-A115” • Table 1 “Ordering information”: – added column “Topside marking” (moved from Table 2) – Type number PCA9547PW: Topside mark corrected from “PCA9547” to “PCA9547PW” (this is a correction to documentation only, no change to device) • Table 2 “Ordering options”: – added columns “Orderable part number”, “Package”, “Packing method”, “Minimum order quantity” – deleted column “Topside mark” (moved to Table 1) • Section 6.4 “Power-on reset”, first paragraph, third sentence: corrected from “V_{DD} must be lowered below 0.2 V to reset the device” to “V_{DD} must be lowered below 0.2 V for at least 5 μs in order to reset the device” • Table 5 “Limiting values”: added limiting value “$T_{j(max)}$” • Added Section 10 “Thermal characteristics” • Table 7 “Static characteristics at V_{DD} = 2.3 V to 3.6 V”: – sub-section “Select inputs A0, A1, A2, $\overline{\text{RESET}}$”: Max value for V_{IH} corrected from “V_{DD} + 0.5 V” to “6 V” – Table note [2]: inserted phrase “for at least 5 μs” • Table 8 “Static characteristics at V_{DD} = 4.5 V to 5.5 V”: – sub-section “Select inputs A0, A1, A2, $\overline{\text{RESET}}$”: Max value for V_{IH} corrected from “V_{DD} + 0.5 V” to “6 V” – Table note [2]: inserted phrase “for at least 5 μs” • Added Section 15 “Soldering: PCB footprints”			
PCA9547 v.3	20090710	Product data sheet	-	PCA9547 v.2
PCA9547 v.2	20060912	Product data sheet	-	PCA9547 v.1
PCA9547 v.1	20051005	Product data sheet	-	-

All information provided in this document is subject to legal disclaimers.

© NXP Semiconductors N.V. 2014. All rights reserved.

18. Legal information

18.1 Data sheet status

Document status[1][2]	Product status[3]	Definition
Objective [short] data sheet	Development	This document contains data from the objective specification for product development.
Preliminary [short] data sheet	Qualification	This document contains data from the preliminary specification.
Product [short] data sheet	Production	This document contains the product specification.

[1] Please consult the most recently issued document before initiating or completing a design.

[2] The term 'short data sheet' is explained in section "Definitions".

[3] The product status of device(s) described in this document may have changed since this document was published and may differ in case of multiple devices. The latest product status information is available on the Internet at URL http://www.nxp.com.

18.2 Definitions

Draft — The document is a draft version only. The content is still under internal review and subject to formal approval, which may result in modifications or additions. NXP Semiconductors does not give any representations or warranties as to the accuracy or completeness of information included herein and shall have no liability for the consequences of use of such information.

Short data sheet — A short data sheet is an extract from a full data sheet with the same product type number(s) and title. A short data sheet is intended for quick reference only and should not be relied upon to contain detailed and full information. For detailed and full information see the relevant full data sheet, which is available on request via the local NXP Semiconductors sales office. In case of any inconsistency or conflict with the short data sheet, the full data sheet shall prevail.

Product specification — The information and data provided in a Product data sheet shall define the specification of the product as agreed between NXP Semiconductors and its customer, unless NXP Semiconductors and customer have explicitly agreed otherwise in writing. In no event however, shall an agreement be valid in which the NXP Semiconductors product is deemed to offer functions and qualities beyond those described in the Product data sheet.

18.3 Disclaimers

Limited warranty and liability — Information in this document is believed to be accurate and reliable. However, NXP Semiconductors does not give any representations or warranties, expressed or implied, as to the accuracy or completeness of such information and shall have no liability for the consequences of use of such information. NXP Semiconductors takes no responsibility for the content in this document if provided by an information source outside of NXP Semiconductors.

In no event shall NXP Semiconductors be liable for any indirect, incidental, punitive, special or consequential damages (including - without limitation - lost profits, lost savings, business interruption, costs related to the removal or replacement of any products or rework charges) whether or not such damages are based on tort (including negligence), warranty, breach of contract or any other legal theory.

Notwithstanding any damages that customer might incur for any reason whatsoever, NXP Semiconductors' aggregate and cumulative liability towards customer for the products described herein shall be limited in accordance with the *Terms and conditions of commercial sale* of NXP Semiconductors.

Right to make changes — NXP Semiconductors reserves the right to make changes to information published in this document, including without limitation specifications and product descriptions, at any time and without notice. This document supersedes and replaces all information supplied prior to the publication hereof.

Suitability for use — NXP Semiconductors products are not designed, authorized or warranted to be suitable for use in life support, life-critical or safety-critical systems or equipment, nor in applications where failure or malfunction of an NXP Semiconductors product can reasonably be expected to result in personal injury, death or severe property or environmental damage. NXP Semiconductors and its suppliers accept no liability for inclusion and/or use of NXP Semiconductors products in such equipment or applications and therefore such inclusion and/or use is at the customer's own risk.

Applications — Applications that are described herein for any of these products are for illustrative purposes only. NXP Semiconductors makes no representation or warranty that such applications will be suitable for the specified use without further testing or modification.

Customers are responsible for the design and operation of their applications and products using NXP Semiconductors products, and NXP Semiconductors accepts no liability for any assistance with applications or customer product design. It is customer's sole responsibility to determine whether the NXP Semiconductors product is suitable and fit for the customer's applications and products planned, as well as for the planned application and use of customer's third party customer(s). Customers should provide appropriate design and operating safeguards to minimize the risks associated with their applications and products.

NXP Semiconductors does not accept any liability related to any default, damage, costs or problem which is based on any weakness or default in the customer's applications or products, or the application or use by customer's third party customer(s). Customer is responsible for doing all necessary testing for the customer's applications and products using NXP Semiconductors products in order to avoid a default of the applications and the products or of the application or use by customer's third party customer(s). NXP does not accept any liability in this respect.

Limiting values — Stress above one or more limiting values (as defined in the Absolute Maximum Ratings System of IEC 60134) will cause permanent damage to the device. Limiting values are stress ratings only and (proper) operation of the device at these or any other conditions above those given in the Recommended operating conditions section (if present) or the Characteristics sections of this document is not warranted. Constant or repeated exposure to limiting values will permanently and irreversibly affect the quality and reliability of the device.

Terms and conditions of commercial sale — NXP Semiconductors products are sold subject to the general terms and conditions of commercial sale, as published at http://www.nxp.com/profile/terms, unless otherwise agreed in a valid written individual agreement. In case an individual agreement is concluded only the terms and conditions of the respective agreement shall apply. NXP Semiconductors hereby expressly objects to applying the customer's general terms and conditions with regard to the purchase of NXP Semiconductors products by customer.

No offer to sell or license — Nothing in this document may be interpreted or construed as an offer to sell products that is open for acceptance or the grant, conveyance or implication of any license under any copyrights, patents or other industrial or intellectual property rights.

All information provided in this document is subject to legal disclaimers.

© NXP Semiconductors N.V. 2014. All rights reserved.

Export control — This document as well as the item(s) described herein may be subject to export control regulations. Export might require a prior authorization from competent authorities.

Non-automotive qualified products — Unless this data sheet expressly states that this specific NXP Semiconductors product is automotive qualified, the product is not suitable for automotive use. It is neither qualified nor tested in accordance with automotive testing or application requirements. NXP Semiconductors accepts no liability for inclusion and/or use of non-automotive qualified products in automotive equipment or applications.

In the event that customer uses the product for design-in and use in automotive applications to automotive specifications and standards, customer (a) shall use the product without NXP Semiconductors' warranty of the product for such automotive applications, use and specifications, and (b) whenever customer uses the product for automotive applications beyond NXP Semiconductors' specifications such use shall be solely at customer's own risk, and (c) customer fully indemnifies NXP Semiconductors for any liability, damages or failed product claims resulting from customer design and use of the product for automotive applications beyond NXP Semiconductors' standard warranty and NXP Semiconductors' product specifications.

Translations — A non-English (translated) version of a document is for reference only. The English version shall prevail in case of any discrepancy between the translated and English versions.

18.4 Trademarks

Notice: All referenced brands, product names, service names and trademarks are the property of their respective owners.

I²C-bus — logo is a trademark of NXP Semiconductors N.V.

19. Contact information

For more information, please visit: **http://www.nxp.com**

For sales office addresses, please send an email to: **salesaddresses@nxp.com**

All information provided in this document is subject to legal disclaimers.

© NXP Semiconductors N.V. 2014. All rights reserved.

20. Contents

1	**General description**	**1**
2	**Features and benefits**	**1**
3	**Ordering information**	**2**
3.1	Ordering options	2
4	**Block diagram**	**3**
5	**Pinning information**	**4**
5.1	Pinning	4
5.2	Pin description	5
6	**Functional description**	**6**
6.1	Device addressing	6
6.2	Control register	6
6.2.1	Control register definition	6
6.3	RESET input	7
6.4	Power-on reset	7
6.5	Voltage translation	8
7	**Characteristics of the I²C-bus**	**9**
7.1	Bit transfer	9
7.1.1	START and STOP conditions	9
7.2	System configuration	10
7.3	Acknowledge	10
7.4	Bus transactions	11
8	**Application design-in information**	**12**
9	**Limiting values**	**13**
10	**Thermal characteristics**	**13**
11	**Static characteristics**	**14**
12	**Dynamic characteristics**	**16**
13	**Package outline**	**18**
14	**Soldering of SMD packages**	**21**
14.1	Introduction to soldering	21
14.2	Wave and reflow soldering	21
14.3	Wave soldering	21
14.4	Reflow soldering	22
15	**Soldering: PCB footprints**	**24**
16	**Abbreviations**	**27**
17	**Revision history**	**27**
18	**Legal information**	**28**
18.1	Data sheet status	28
18.2	Definitions	28
18.3	Disclaimers	28
18.4	Trademarks	29
19	**Contact information**	**29**
20	**Contents**	**30**

Please be aware that important notices concerning this document and the product(s) described herein, have been included in section 'Legal information'.

© NXP Semiconductors N.V. 2014. All rights reserved.

For more information, please visit: http://www.nxp.com
For sales office addresses, please send an email to: salesaddresses@nxp.com

Date of release: 1 April 2014
Document identifier: PCA9547