PCA8553

Automotive 40 × 4 LCD segment driver

Rev. 4 — 1 October 2021 Product data sheet

1 General description

PCA8553 is an ultra low-power LCD segment driver with 4 backplane- and 40 segment-driver outputs, with either an I^2C- or an SPI-bus interface. It comprises an internal oscillator, bias generation, instruction decoding, and display controller.

For a selection of NXP LCD segment drivers, see Table 23.

2 Features and benefits

- AEC-Q100 grade 2 (up to 105 °C) compliant for automotive applications
- Single chip LCD controller and driver
- Selectable backplane drive configuration: static, 2, 3, or 4 backplane multiplexing
- Selectable display bias configuration: static, $^1/_2$, or $^1/_3$
- Internal LCD bias generation with buffers
- 40 segment drives:
  - Up to 20 7-segment numeric characters
  - Up to 10 14-segment alphanumeric characters
  - Any graphics of up to 160 segments/elements
- Auto-incrementing display data and instruction loading
- Versatile blinking modes
- Independent supplies of V_{LCD} and V_{DD}
- Power supply ranges:
  - 1.8 V to 5.5 V for V_{LCD}
  - 1.8 V to 5.5 V for V_{DD}
- Ultra low-power consumption
- 400 kHz I^2C-bus interface
- 5 MHz SPI-bus interface
- Internally generated or externally supplied clock signal

3 Applications

- Metering equipment
- Small appliances
- Consumer healthcare devices
- Battery operated devices
- Measuring equipment

4 Ordering information

Table 1. Ordering Information

Product type Number	Topside mark	Package		
		Name	Description	Version
PCA8553DTT/A	PCA8553D	TSSOP56	plastic thin shrink small outline package; 56 leads; body width 6.1 mm	SOT364-1

4.1 Ordering options

Table 2. Ordering options

Product type Number	Orderable part number	Package	Packing method [1]	Minimum order quantity	Temperature
PCA8553DTT/AJ	PCA8553DTT/AJ [2]	TSSOP56	reel 13” q1 non dry pack	2000	T_{amb} = -40 °C to +85 °C
	PCA8553DTT/AY	TSSOP56	reel 13” q1 dry pack	2000	T_{amb} = -40 °C to +85 °C

[1] Standard packing quantities and other packaging data are available at www.nxp.com/ packages/

[2] Discontinuation notice 202107021DN - drop-in replacement is PCA8553DTT/AY - this is documented in PCN202102010F01.

All information provided in this document is subject to legal disclaimers.

© NXP B.V. 2021. All rights reserved.

5 Block diagram

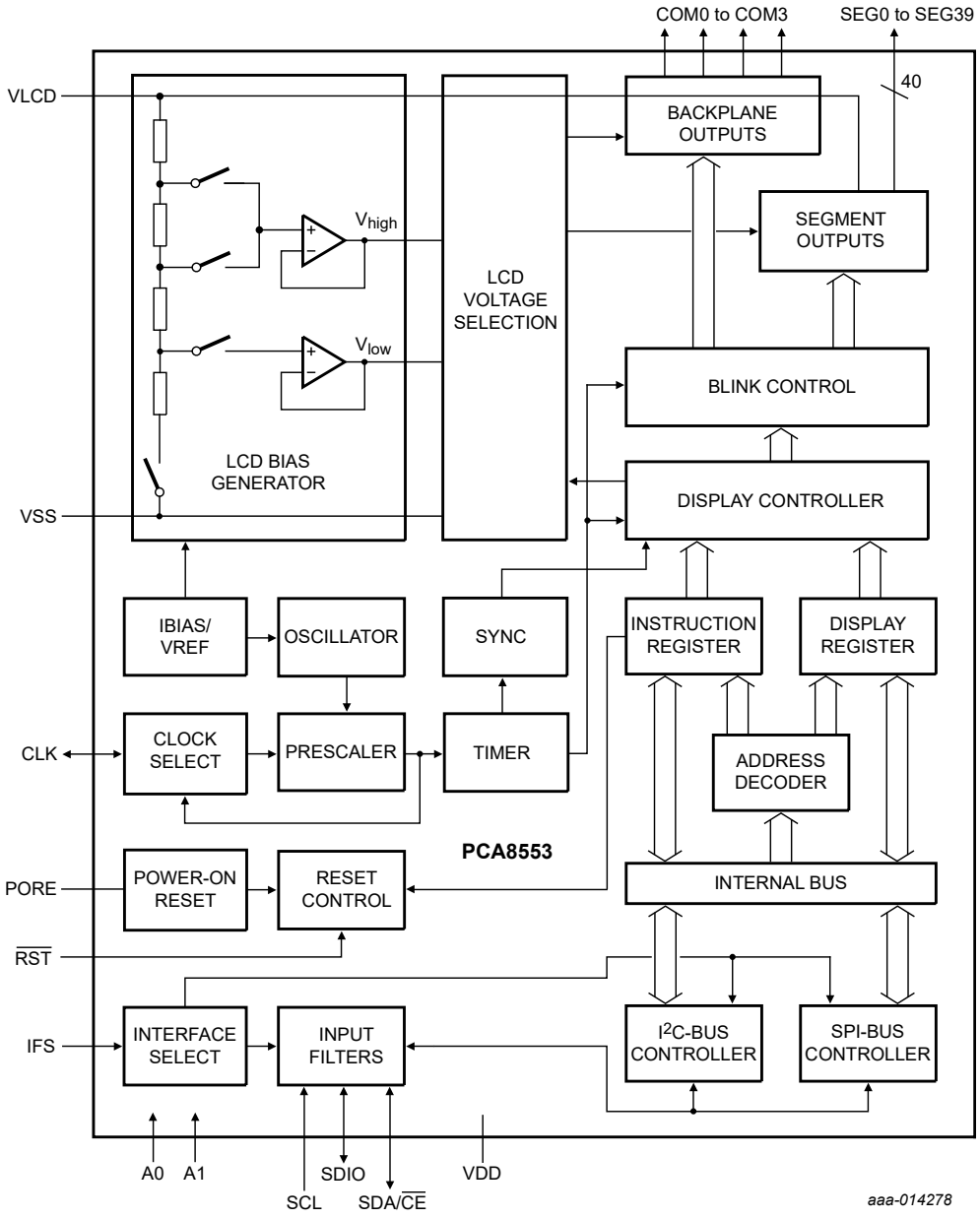

Figure 1. Block diagram of PCA8553

All information provided in this document is subject to legal disclaimers.

© NXP B.V. 2021. All rights reserved.

6 Pinning information

6.1 Pinning

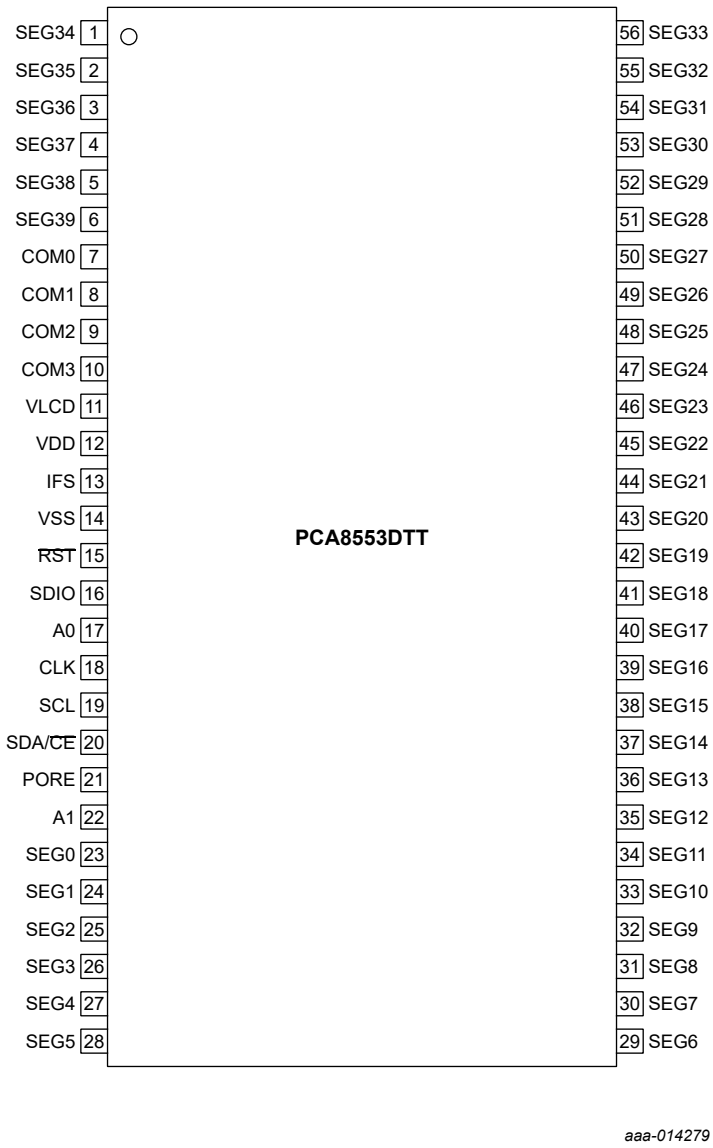

Figure 2. Pin configuration of PCA8553DTT (TSSOP56)

6.2 Pin description

Table 3. Pin description of PCA8553DTT (TSSOP56)

Input or input/output pins must always be at a defined level (V_{SS} or V_{DD}) unless otherwise specified.

Symbol	Pin	Type	Description
Backplane and segment outputs			

All information provided in this document is subject to legal disclaimers.

© NXP B.V. 2021. All rights reserved.

Table 3. Pin description of PCA8553DTT (TSSOP56)*...continued*

Input or input/output pins must always be at a defined level (V_{SS} or V_{DD}) unless otherwise specified.

Symbol	Pin	Type	Description	
SEG34 to SEG39	1 to 6	output	LCD segments	
SEG0 to SEG33	23 to 56			
COM0 to COM3	7 to 10	output	LCD backplanes	
Supply pins				
VLCD	11	supply	LCD supply voltage	
VDD	12	supply	supply voltage	
VSS	14	supply	ground supply	
Clock and control pins				
$\overline{RST}$	15	input	reset input, active LOW	
PORE[1]	21	input	Power-On Reset (POR) enable • connect to V_{DD} for enabling POR • connect to V_{SS} (or leave open) for disabling POR	
CLK	18	input/output	internal oscillator output, external oscillator input • must be left open if unused	
Bus-related pins			I^2C-bus	**SPI-bus**
IFS[1]	13	input	interface selector input	
			• connect to V_{SS} (or leave open)	• connect to V_{DD}
SDIO	16	input/output	unused	serial data input/output
A0[1]	17	input	hardware device address selection; • connect to V_{SS} (or leave open) for logic 0 • connect to V_{DD} for logic 1	unused
A1[1]	22	input		
SCL	19	input	serial clock input	serial clock input
SDA/$\overline{CE}$	20	input/output	serial data output	chip enable input, active LOW

[1] A series resistance between V_{DD} and the pin must not exceed 1 kΩ to ensure proper functionality, see Section 15.3.

7 Functional description

7.1 Registers of the PCA8553

The registers of the PCA8553 are arranged in bytes with 8 bit, addressed by an address pointer. Table 4 depicts the layout.

Table 4. Registers of the PCA8553

Bits labeled as 0 must always be written with logic 0.

Register name	Address	Bits								Reference
	AP[4:0]	7	6	5	4	3	2	1	0	
Command registers										

All information provided in this document is subject to legal disclaimers.

© NXP B.V. 2021. All rights reserved.

Table 4. Registers of the PCA8553*...continued*

Bits labeled as 0 must always be written with logic 0.

Register name	Address	Bits								Reference
	AP[4:0]	7	6	5	4	3	2	1	0	
Software_reset	00h	SR[7:0]								Table 8
Device_ctrl	01h	0	0	0	FF[2:0]			OSC	COE	Table 5
Display_ctrl_1	02h	0	0	0	BOOST	MUX[1:0]		B	DE	Table 6
Display_ctrl_2	03h	0	0	0	0	0	BL[1:0]		INV	Table 7
Display data registers[1]										
COM0	04h	SEG7	SEG6	SEG5	SEG4	SEG3	SEG2	SEG1	SEG0	Table 9
	05h	SEG15	SEG14	SEG13	SEG12	SEG11	SEG10	SEG9	SEG8	
	06h	SEG23	SEG22	SEG21	SEG20	SEG19	SEG18	SEG17	SEG16	
	07h	SEG31	SEG30	SEG29	SEG28	SEG27	SEG26	SEG25	SEG24	
	08h	SEG39	SEG38	SEG37	SEG36	SEG35	SEG34	SEG33	SEG32	
COM1	09h	SEG7	SEG6	SEG5	SEG4	SEG3	SEG2	SEG1	SEG0	
	:	:	:	:	:	:	:	:	:	
	0Dh	SEG39	SEG38	SEG37	SEG36	SEG35	SEG34	SEG33	SEG32	
COM2	0Eh	SEG7	SEG6	SEG5	SEG4	SEG3	SEG2	SEG1	SEG0	
	:	:	:	:	:	:	:	:	:	
	12h	SEG39	SEG38	SEG37	SEG36	SEG35	SEG34	SEG33	SEG32	
COM3	13h	SEG7	SEG6	SEG5	SEG4	SEG3	SEG2	SEG1	SEG0	
	:	:	:	:	:	:	:	:	:	
	17h	SEG39	SEG38	SEG37	SEG36	SEG35	SEG34	SEG33	SEG32	

[1] See Table 9.

For writing to the registers, send the address byte first, then write the data to the register (see Section 10.1.4 and Section 10.2.1). The address byte works as an address pointer. For the succeeding registers, the address pointer is automatically incremented by 1 (see Figure 3) and all following data are written into these register addresses. After register 17h, the auto-incrementing will stop and data are ignored.

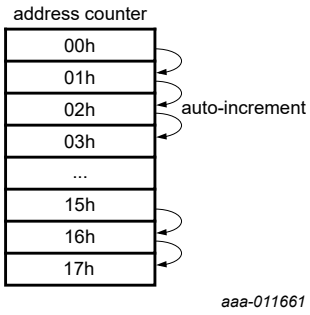

Figure 3. Address counter incrementing

All information provided in this document is subject to legal disclaimers.

© NXP B.V. 2021. All rights reserved.

7.2 Command registers of the PCA8553

7.2.1 Command: Device_ctrl

The Device_ctrl command sets the device into a defined state. It should be executed before enabling the display (see bit DE in Table 6).

Table 5. Device_ctrl - device control command register (address 01h) bit description

Bit	Symbol	Value	Description
7 to 5	-	000	default value
4 to 2	FF[2:0]		**frame frequency selection**
		000	f_{fr} = 32 Hz
		001[1]	f_{fr} = 64 Hz
		010	f_{fr} = 96 Hz
		011	f_{fr} = 128 Hz
		100	f_{fr} = 160 Hz
		101	f_{fr} = 192 Hz
		110	f_{fr} = 224 Hz
		111	f_{fr} = 256 Hz
1	OSC		**internal oscillator control**
		0[1]	enabled
		1	disabled
0	COE		**clock output enable**
		0[1]	clock signal not available on pin CLK; pin CLK is in 3-state
		1	clock signal available on pin CLK

[1] Default value.

7.2.1.1 Internal oscillator and clock output

Bit OSC enables or disables the internal oscillator. When the internal oscillator is used, bit COE allows making the clock signal available on pin CLK. If this is not intended, pin CLK should be left open. The design ensures that the duty cycle of the clock output is 50 : 50 (% HIGH-level time : % LOW-level time).

In applications where an external clock has to be applied to the PCA8553, bit OSC must be set logic 1 and COE logic 0. In this case pin CLK becomes an input.

In power-down mode (see Section 7.3.1)

- if pin CLK is configured as an output, there is no signal on CLK
- if pin CLK is configured as an input, the signal on CLK can be removed.

Remark: A clock signal must always be supplied to the device if the display is enabled (see bit DE in Table 6). Removing the clock may freeze the LCD in a DC state, which is not suitable for the liquid crystal.

All information provided in this document is subject to legal disclaimers.

© NXP B.V. 2021. All rights reserved.

7.2.2 Command: Display_ctrl_1

The Display_ctrl_1 command allows configuring the basic display set-up.

Table 6. Display_ctrl_1 - display control command 1 register (address 02h) bit description

Bit	Symbol	Value	Description
7 to 5	-	000	default value
4	BOOST		**large display mode support**
		0[1]	standard power drive scheme
		1	enhanced power drive scheme for higher display loads
3 to 2	MUX[1:0]		**multiplex drive mode selection**
		00[1]	1:4 multiplex drive mode; COM0 to COM3 (n_{MUX} = 4)
		01	1:3 multiplex drive mode; COM0 to COM2 (n_{MUX} = 3)
		10	1:2 multiplex drive mode; COM0 and COM1 (n_{MUX} = 2)
		11	static drive mode; COM0 (n_{MUX} = 1)
1	B[2]		**bias mode selection**
		0[1]	$^1/_3$ bias (a_{bias} = 2)
		1	$^1/_2$ bias (a_{bias} = 1)
0	DE		**display enable**[3]
		0[1]	display disabled; device is in power-down mode
		1	display enabled; device is in power-on mode

[1] Default value.
[2] Not applicable for static drive mode.
[3] See Section 7.3.1.

7.2.2.1 Enhanced power drive mode

By setting the BOOST bit to logic 1, the driving capability of the display signals is increased to cope with large displays with a higher effective capacitance. Setting this bit increases the current consumption on V_{LCD}.

7.2.2.2 Multiplex drive mode

MUX[1:0] sets the multiplex driving scheme and the associated backplane drive signals, which are active. For further details, see Section 8.2.

7.2.3 Command: Display_ctrl_2

Table 7. Display_ctrl_2 - display control command 2 register (address 03h) bit description

Bit	Symbol	Value	Description
7 to 3	-	00000	default value

All information provided in this document is subject to legal disclaimers.

© NXP B.V. 2021. All rights reserved.

Table 7. Display_ctrl_2 - display control command 2 register (address 03h) bit description...*continued*

Bit	Symbol	Value	Description
2 to 1	BL[1:0]		**blink control**
		00[1]	blinking off
		01	blinking on, f_{blink} = 0.5 Hz
		10	blinking on, f_{blink} = 1 Hz
		11	blinking on, f_{blink} = 2 Hz
0	INV		**inversion mode selection**
		0[1]	line inversion (driving scheme A)
		1	frame inversion (driving scheme B)

[1] Default value.

7.2.3.1 Blinking

The whole display blinks at frequencies selected by the blink control bits BL[1:0], see Table 7. The blink frequencies are derived from the clock frequency. During the blank-out phase of the blinking period, the display is turned off.

If an external clock with frequency $f_{clk(ext)}$ is used, the blinking frequency is determined by Equation 1. For notation, see Section 8.2.

$$f_{blink(eff)} = \frac{2 \times n_{MUX} \times f_{fr} \times f_{blink}}{f_{clk(ext)}} \quad (1)$$

7.2.3.2 Line inversion (driving scheme A) and frame inversion (driving scheme B)

The waveforms used to drive LCD inherently produce a DC voltage across the display cell. The PCA8553 compensates for the DC voltage by inverting the waveforms on alternate frames or alternate lines. The choice of compensation method is determined with the INV bit.

7.3 Starting and resetting the PCA8553

If the internal Power-On Reset (POR) is enabled by connecting pin PORE to V_{DD}, the chip resets automatically when V_{DD} rises above the minimum supply voltage. No further action is required.

If the internal POR is disabled by connecting pin PORE to V_{SS}, the chip must be reset by driving the $\overline{RST}$ pin to logic 0 for at least 10 µs, see Figure 4. See also application information in Section 15.

All information provided in this document is subject to legal disclaimers.

© NXP B.V. 2021. All rights reserved.

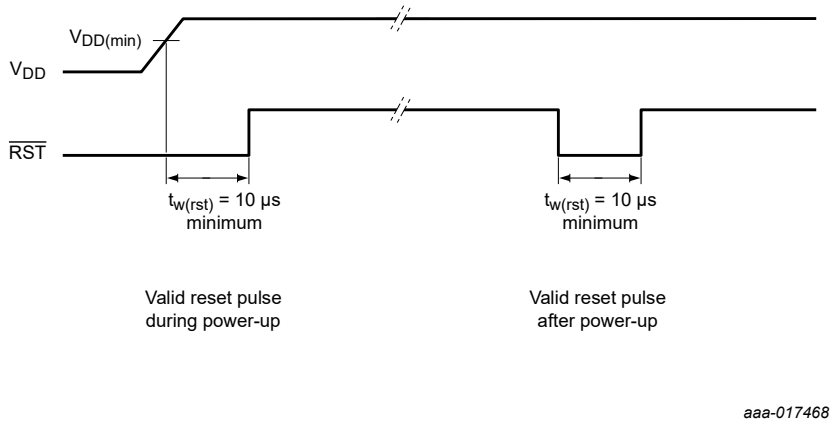

Figure 4. Reset pulse timing

Alternatively a software reset can be applied (see Section 7.3.4).

Following a reset, the register 00h has to be rewritten with 0h by the next command byte or the address pointer AP[4:0] has to be set to the required address after a new START procedure.

7.3.1 Power-down mode

After a reset, the PCA8553 remains in power-down mode. In power-down mode the oscillator is switched off and there is no output on pin CLK. The register settings remain unchanged and the bus remains active. To enable the PCA8553, bit DE (command Display_ctrl_1, see Table 6) must be set to logic 1.

7.3.2 Power-On Reset (POR)

If pin PORE is connected to V_{DD}, the PCA8553 comprises an internal POR, which puts the device into the following starting conditions:

- All backplane and segment outputs are set to V_{SS}
- The selected drive mode is: 1:4 multiplex with $^1/_3$ bias
- Blinking is switched off
- The address pointer is cleared (set to logic 0)
- The display and the internal oscillator are disabled
- The display registers are set to logic 0
- The bus interface is initialized

Remark: The internal POR can be disabled by connecting pin PORE to V_{SS}. In this case, the internal registers are not defined and require a hardware reset according to Section 7.3.3 or a software reset, see Section 7.3.4.

7.3.3 Hardware reset: RST pin

At power-on the PCA8553 can be reset to the following starting conditions by pulling pin $\overline{RST}$ low:

- All backplane and segment outputs are set to V_{SS}
- The selected drive mode is: 1:4 multiplex with $^1/_3$ bias
- Blinking is switched off

All information provided in this document is subject to legal disclaimers.

© NXP B.V. 2021. All rights reserved.

- The address pointer is cleared (set to logic 0)
- The display and the internal oscillator are disabled
- The display registers are set to logic 0

Remark: The hardware reset overrides the POR see Section 7.3.2.

7.3.4 Command: Software_reset

The internal registers including the display registers and the address pointer (set to logic 0) of the device are reset by the Software_reset command.

Table 8. Software_reset - software reset command register (address 00h) bit description

Bit	Symbol	Value	Description
7 to 0	SR[7:0]		**software reset**
		0000 0000[1]	no reset
		0010 1100	software reset

[1] Default value.

7.4 Display data register mapping

The example in Table 9 and Figure 5 illustrates the segment and backplane mapping of the display in relation to the display RAM.

For example, in 1:4 multiplex drive mode, the backplanes are served by signals COM0 to COM3 and the segments are driven by signals SEG0 to SEG39. Contents of addresses 04h to 08h are allocated to the first row (COM0) starting with the LSB driving the leftmost element and moving forward to the right with increasing bit position. If a bit is logic 0, the element is off, if it is logic 1 the element is turned on. All register content is LSB to MSB left to right. Addresses 09h to 0Dh serve COM1 signals, addresses 0Eh to 12h serve COM2 signals, and addresses 13h to 17h serve COM3 signals.

For displays with fewer segments/elements the unused bits are ignored.

Table 9. Register to segment and backplane mapping

Backplanes[1]	Segments									
	SEG0 to SEG7		SEG8 to SEG15		SEG16 to SEG23		SEG24 to SEG31		SEG32 to SEG39	
	LSB	MSB	LSB	MSB	LSB	MSB	LSB	MSB	LSB	MSB
1:4 multiplex drive mode										
COM0	content of 04h		content of 05h		content of 06h		content of 07h		content of 08h	
COM1	content of 09h		content of 0Ah		content of 0Bh		content of 0Ch		content of 0Dh	
COM2	content of 0Eh		content of 0Fh		content of 10h		content of 11h		content of 12h	
COM3	content of 13h		content of 14h		content of 15h		content of 16h		content of 17h	
1:3 multiplex drive mode										
COM0	content of 04h		content of 05h		content of 06h		content of 07h		content of 08h	
COM1	content of 09h		content of 0Ah		content of 0Bh		content of 0Ch		content of 0Dh	
COM2	content of 0Eh		content of 0Fh		content of 10h		content of 11h		content of 12h	
1:2 multiplex drive mode										

All information provided in this document is subject to legal disclaimers.

© NXP B.V. 2021. All rights reserved.

Table 9. Register to segment and backplane mapping*...continued*

Backplanes[1]	Segments									
	SEG0 to SEG7		SEG8 to SEG15		SEG16 to SEG23		SEG24 to SEG31		SEG32 to SEG39	
	LSB	MSB	LSB	MSB	LSB	MSB	LSB	MSB	LSB	MSB
COM0	content of 04h		content of 05h		content of 06h		content of 07h		content of 08h	
COM1	content of 09h		content of 0Ah		content of 0Bh		content of 0Ch		content of 0Dh	
static drive mode										
COM0	content of 04h		content of 05h		content of 06h		content of 07h		content of 08h	

[1] See also Section 8.3.1.

All information provided in this document is subject to legal disclaimers.

© NXP B.V. 2021. All rights reserved.

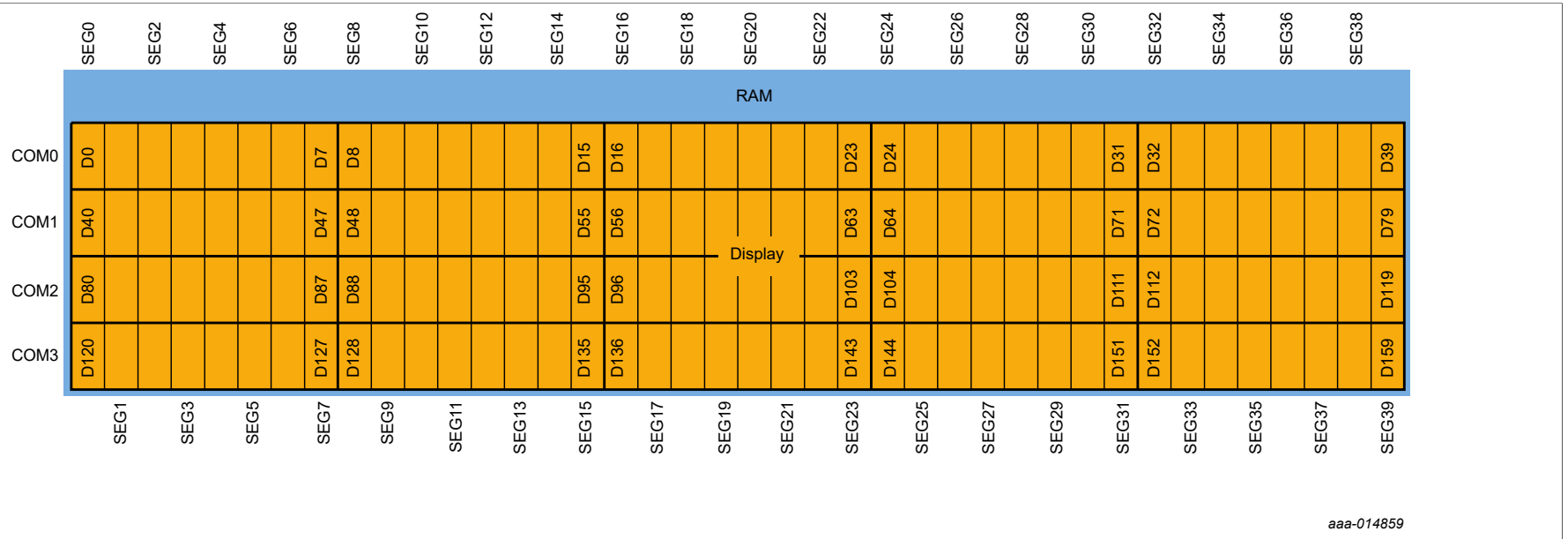

Figure 5. Display RAM organization bitmap for MUX 1:4

All information provided in this document is subject to legal disclaimers.

© NXP B.V. 2021. All rights reserved.

8 Possible display configurations

The possible display configurations of the PCA8553 depend on the number of active backplane outputs required. A selection of display configurations is shown in Table 10. All of these configurations can be implemented in the typical systems shown in Figure 7 or Figure 8.

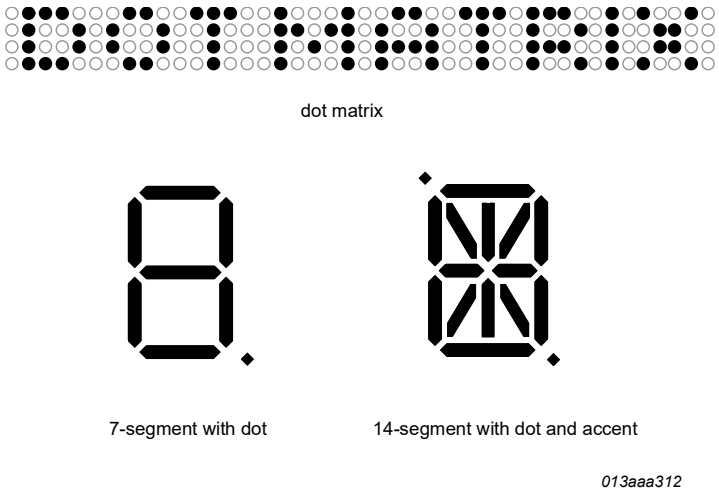

Figure 6. Example of displays suitable for PCA8553

Table 10. Selection of possible display configurations

Number of Backplanes	Icons	Digits/Characters		Dot matrix: segments/ elements
		7-segment[1]	14-segment[2]	
4	160	20	10	160 dots (4 × 40)
3	120	15	7	120 (3 × 40)
2	80	10	5	80 dots (2 × 40)
1	40	5	2	40 dots (1 × 40)

[1] 7 segment display has 8 segments/elements including the decimal point.
[2] 14 segment display has 16 segments/elements including decimal point and accent dot.

All information provided in this document is subject to legal disclaimers.

© NXP B.V. 2021. All rights reserved.

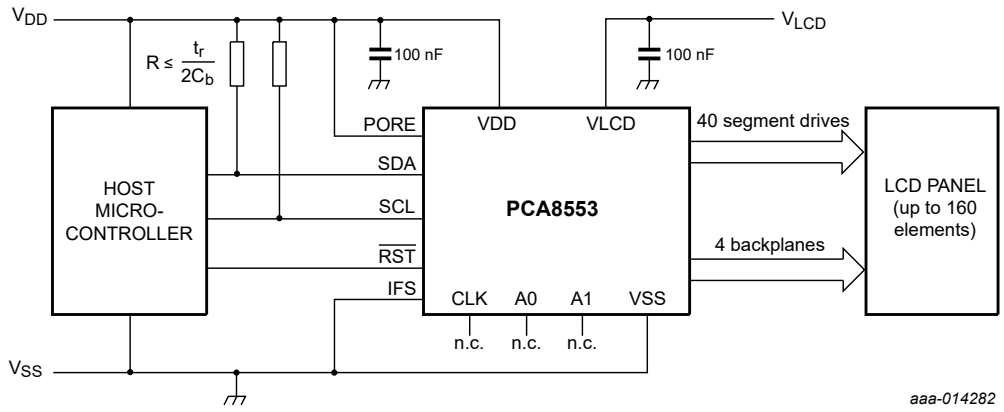

The resistance of the power lines must be kept to a minimum. A decoupling capacitor of at least 100 nF is recommended for the supplies.

Figure 7. Typical system configuration using I²C-bus, internal power-on reset enabled

The host microcontroller manages the 2-line I²C-bus communication channel with the PCA8553. The internal oscillator is used and the internal POR is enabled in the example. The appropriate biasing voltages for the multiplexed LCD waveforms are generated internally. The only other connections required to complete the system are the reset, the power supplies (V_{DD}, V_{SS}, and V_{LCD}) and the LCD panel chosen for the application.

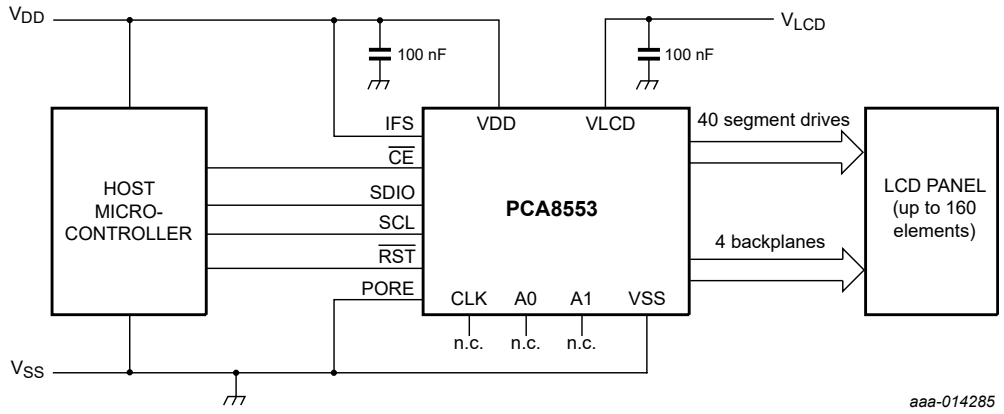

The resistance of the power lines must be kept to a minimum. A decoupling capacitor of at least 100 nF is recommended for the supplies.

Figure 8. Typical system configuration using SPI-bus, internal power-on reset disabled

The host microcontroller manages the 3-line SPI-bus communication channel with the PCA8553. The internal oscillator is enabled. The appropriate biasing voltages for the multiplexed LCD waveforms are generated internally. The only other connections required to complete the system are reset, the power supplies (V_{DD}, V_{SS}, and V_{LCD}) and the LCD panel chosen for the application.

8.1 LCD bias generator

Fractional LCD biasing voltages are obtained from an internal voltage divider of three impedances connected between V_{LCD} and V_{SS}. These intermediate levels are tapped off at positions of $^1/_3$ and $^2/_3$, or $^1/_2$, depending on the bias mode chosen. To keep current consumption to a minimum, on-chip low-power buffers provide these levels to the display.

All information provided in this document is subject to legal disclaimers.

© NXP B.V. 2021. All rights reserved.

8.2 LCD voltage selector

The LCD voltage selector coordinates the multiplexing of the LCD in accordance with the selected LCD drive configuration. The operation of the voltage selector is controlled by the Display_ctrl_1 command (see Table 6). The biasing configurations that apply to the preferred modes of operation, together with the biasing characteristics as functions of V_{LCD} and the resulting discrimination ratios (D) are given in Table 11.

Table 11. Biasing characteristics

LCD drive mode	Number of:		LCD bias configuration	$\frac{V_{off(RMS)}}{V_{LCD}}$	$\frac{V_{on(RMS)}}{V_{LCD}}$	$D = \frac{V_{on(RMS)}}{V_{off(RMS)}}$
	Backplanes	Levels				
static	1	2	static	0	1	∞
1:2 multiplex	2	3	½	0.354	0.791	2.236
1:2 multiplex	2	4	⅓	0.333	0.745	2.236
1:3 multiplex	3	4	⅓	0.333	0.638	1.915
1:4 multiplex	4	4	⅓	0.333	0.577	1.732

A practical value for V_{LCD} is determined by equating $V_{off(RMS)}$ with a defined LCD threshold voltage ($V_{th(off)}$), typically when the LCD exhibits approximately 10 % contrast. In the static drive mode, a suitable choice is $V_{LCD} > 3V_{th(off)}$.

Multiplex drive modes of 1:3 and 1:4 with ½ bias are possible but the discrimination and hence the contrast ratios are smaller.

Bias is calculated with Equation 2

$$\frac{1}{1+a_{bias}} \quad (2)$$

The values for a_{bias} are:

a_{bias} = 1 for ½ bias
a_{bias} = 2 for ⅓ bias

The RMS on-state voltage ($V_{on(RMS)}$) for the LCD is calculated with Equation 3:

$$V_{on(RMS)} = \frac{V_{LCD}}{\sqrt{\frac{a_{bias}^2+2a_{bias}+n_{MUX}}{n_{MUX}\times(1+a_{bias})^2}}} \quad (3)$$

where the values for n are

n_{MUX} = 1 for static drive mode
n_{MUX} = 2 for 1:2 multiplex drive mode
n_{MUX} = 3 for 1:3 multiplex drive mode
n_{MUX} = 4 for 1:4 multiplex drive mode

The RMS off-state voltage ($V_{off(RMS)}$) for the LCD is calculated with Equation 4:

$$V_{off(RMS)} = \frac{V_{LCD}}{\sqrt{\frac{a_{bias}^2-2a_{bias}+n_{MUX}}{n_{MUX}\times(1+a_{bias})^2}}} \quad (4)$$

Discrimination is a term which is defined as the ratio of the on and off RMS voltages ($V_{on(RMS)}$ to $V_{off(RMS)}$) across a segment. It can be thought of as a measurement of contrast. Discrimination is determined from Equation 5:

All information provided in this document is subject to legal disclaimers.

© NXP B.V. 2021. All rights reserved.

$$D = \frac{V_{on(RMS)}}{V_{off(RMS)}} = \sqrt{\frac{a_{bias}^2 + 2a_{bias} + n_{MUX}}{a_{bias}^2 - 2a_{bias} + n_{MUX}}} \quad (5)$$

Using Equation 5, the discrimination for an LCD drive mode of 1:3 multiplex with $^1/_2$ bias is $\sqrt{3} = 1.732$ and the discrimination for an LCD drive mode of 1:4 multiplex with $^1/_2$ bias is $\frac{\sqrt{21}}{3} = 1.528$.

The advantage of these LCD drive modes is a reduction of the LCD full scale voltage V_{LCD} as follows:

- 1:3 multiplex ($^1/_2$ bias): $V_{LCD} = \sqrt{6} \times V_{off(RMS)} = 2.449 V_{off(RMS)}$
- 1:4 multiplex ($^1/_2$ bias): $V_{LCD} = \left[\frac{(4 \times \sqrt{3})}{3}\right] = 2.309 V_{off(RMS)}$

These compare with $V_{LCD} = 3V_{off(RMS)}$ when $^1/_3$ bias is used.

V_{LCD} is sometimes referred as the LCD operating voltage.

8.2.1 Electro-optical performance

Suitable values for $V_{on(RMS)}$ and $V_{off(RMS)}$ are dependent on the LCD liquid used. The RMS voltage, at which a pixel will be switched on or off, determine the transmissibility of the pixel.

For any given liquid, there are two threshold values defined. One point is at 10 % relative transmission (at $V_{th(off)}$) and the other at 90 % relative transmission (at $V_{th(on)}$), see Figure 9. For a good contrast performance, the following rules should be followed:

$$V_{on(RMS)} \geq V_{th(on)} \quad (6)$$

$$V_{off(RMS)} \leq V_{th(off)} \quad (7)$$

$V_{on(RMS)}$ (see Equation 3) and $V_{off(RMS)}$ (see Equation 5) are properties of the display driver and are affected by the selection of a_{bias}, n_{MUX}, and the V_{LCD} voltage.

$V_{th(off)}$ and $V_{th(on)}$ are properties of the LCD liquid and can be provided by the module manufacturer. $V_{th(off)}$ is sometimes named V_{th}. $V_{th(on)}$ is sometimes named saturation voltage V_{sat}.

It is important to match the module properties to those of the driver in order to achieve optimum performance.

All information provided in this document is subject to legal disclaimers.

© NXP B.V. 2021. All rights reserved.

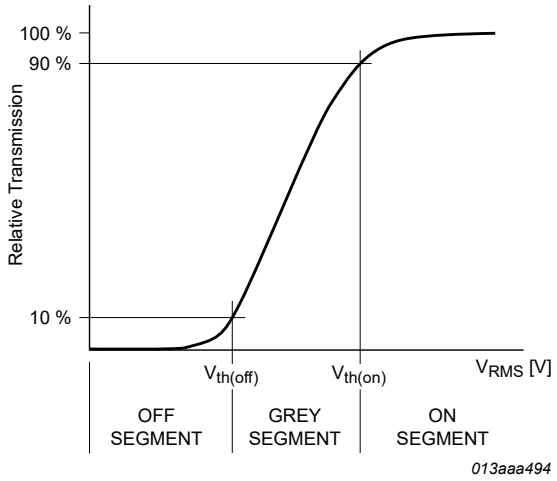

Figure 9. Electro-optical characteristic: relative transmission curve of the liquid

8.2.2 LCD drive mode waveforms

8.2.2.1 Static drive mode

The static LCD drive mode is used when a single backplane is provided in the LCD. The backplane (COMn) and segment (SEGn) drive waveforms for this mode are shown in Figure 10.

All information provided in this document is subject to legal disclaimers.

© NXP B.V. 2021. All rights reserved.

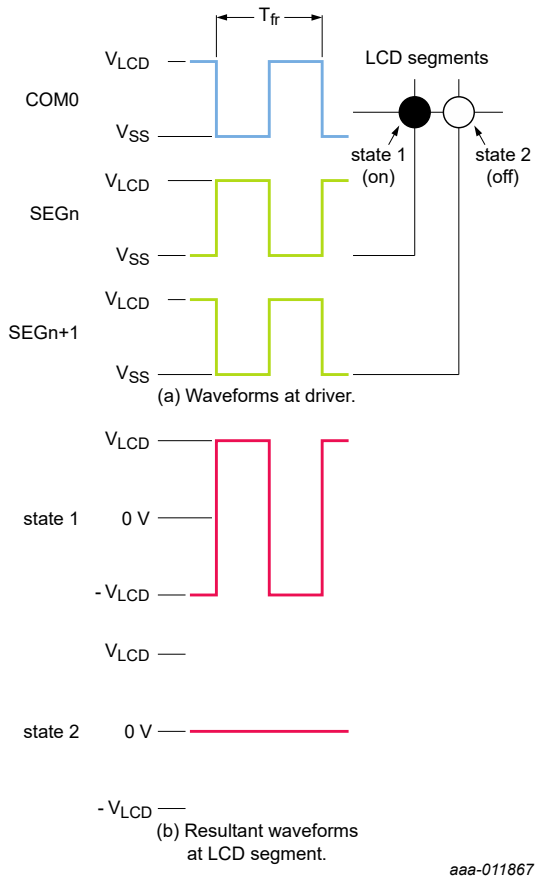

$V_{state1}(t) = V_{SEGn}(t) - V_{COM0}(t)$.
$V_{on(RMS)} = V_{LCD}$.
$V_{state2}(t) = V_{(SEGn + 1)}(t) - V_{COM0}(t)$.
$V_{off(RMS)} = 0$ V.

Figure 10. Static drive mode waveforms

8.2.2.2 1:2 Multiplex drive mode

When two backplanes are provided in the LCD, the 1:2 multiplex mode applies. The PCA8553 allows the use of ½ bias or ⅓ bias in this mode as shown in Figure 11 and Figure 12.

All information provided in this document is subject to legal disclaimers.

© NXP B.V. 2021. All rights reserved.

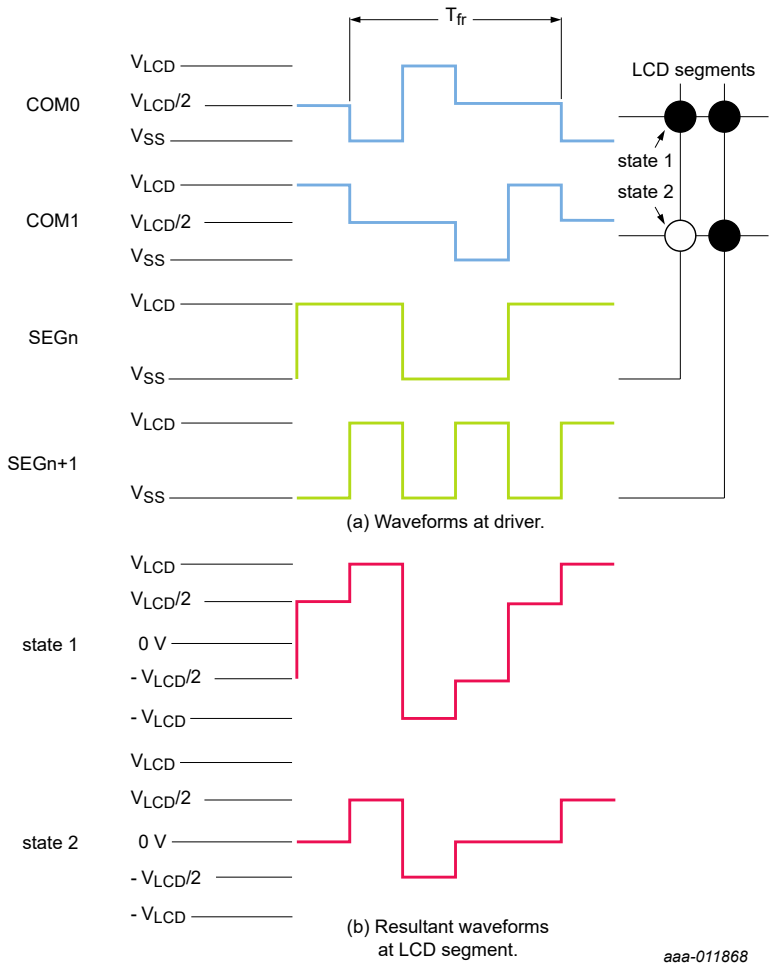

$V_{state1}(t) = V_{SEGn}(t) - V_{COM0}(t)$.

$V_{on(RMS)} = 0.791V_{LCD}$.

$V_{state2}(t) = V_{SEGn}(t) - V_{COM1}(t)$.

$V_{off(RMS)} = 0.354V_{LCD}$.

Figure 11. Waveforms for the 1:2 multiplex drive mode with ½ bias

All information provided in this document is subject to legal disclaimers.

© NXP B.V. 2021. All rights reserved.

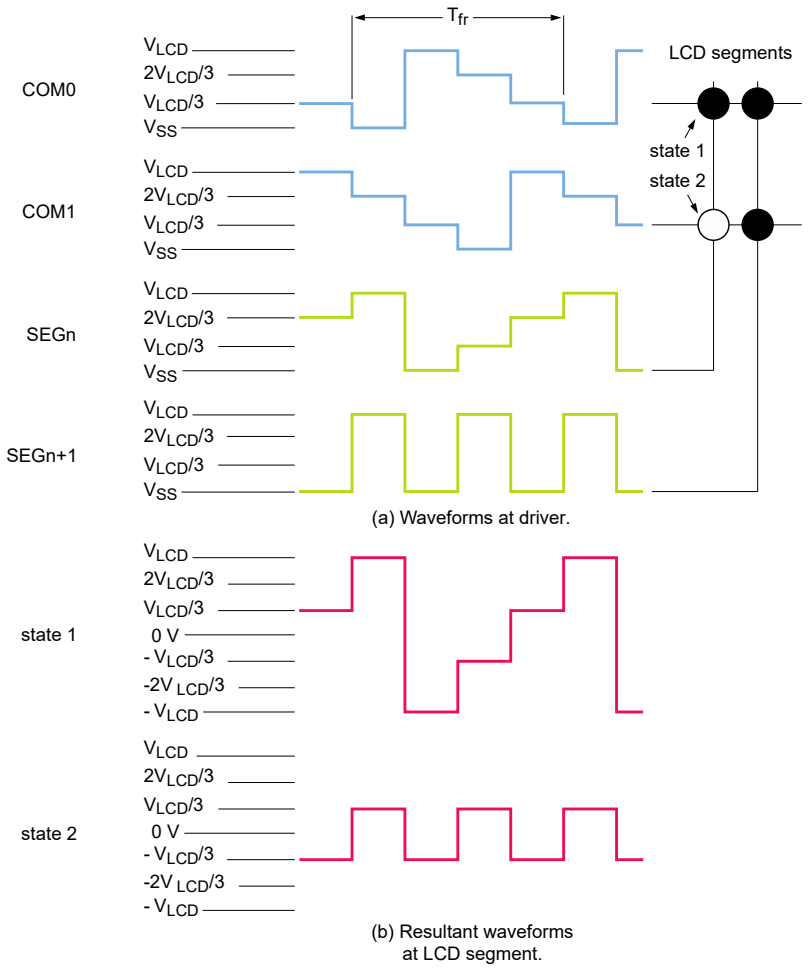

$V_{state1}(t) = V_{SEGn}(t) - V_{COM0}(t)$.
$V_{on(RMS)} = 0.745V_{LCD}$.
$V_{state2}(t) = V_{SEGn}(t) - V_{COM1}(t)$.
$V_{off(RMS)} = 0.333V_{LCD}$.

Figure 12. Waveforms for the 1:2 multiplex drive mode with $^1/_3$ bias

8.2.2.3 1:3 Multiplex drive mode

When three backplanes are provided in the LCD, the 1:3 multiplex drive mode applies, as shown in Figure 13.

All information provided in this document is subject to legal disclaimers.

© NXP B.V. 2021. All rights reserved.

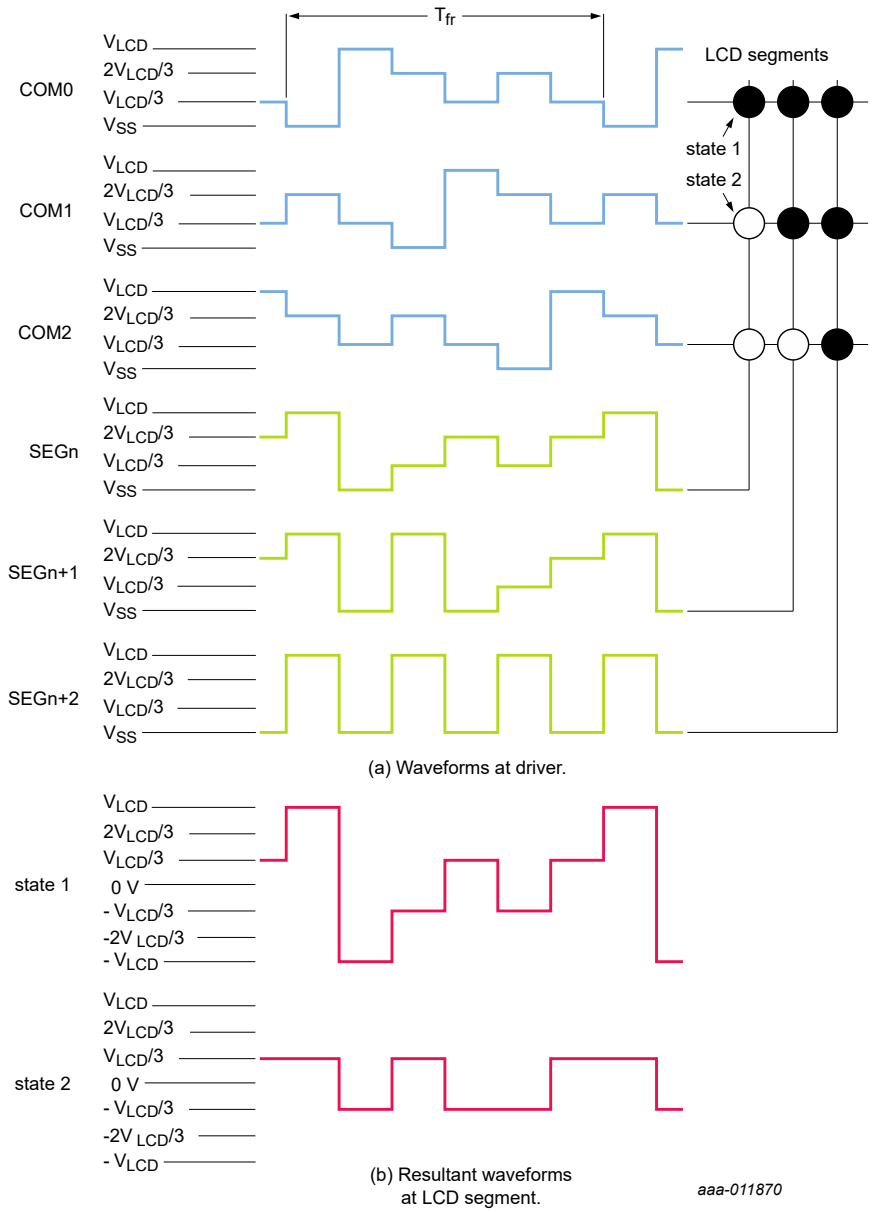

$V_{state1}(t) = V_{SEGn}(t) - V_{COM0}(t)$.
$V_{on(RMS)} = 0.638V_{LCD}$.
$V_{state2}(t) = V_{SEGn}(t) - V_{COM1}(t)$.
$V_{off(RMS)} = 0.333V_{LCD}$.

Figure 13. Waveforms for the 1:3 multiplex drive mode with $^1/_3$ bias

8.2.2.4 1:4 Multiplex drive mode

When four backplanes are provided in the LCD, the 1:4 multiplex drive mode applies as shown in Figure 14.

All information provided in this document is subject to legal disclaimers.

© NXP B.V. 2021. All rights reserved.

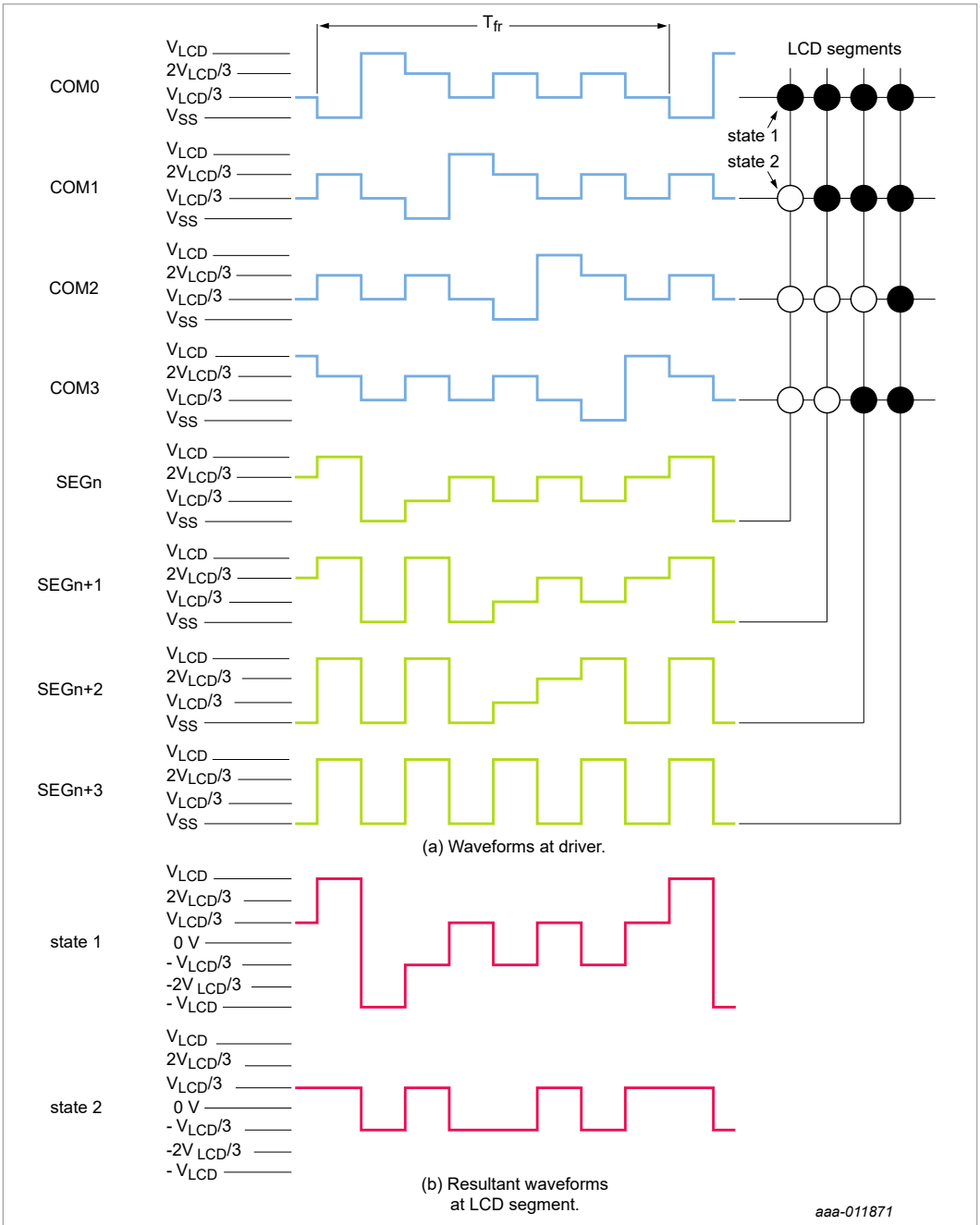

$V_{state1}(t) = V_{SEGn}(t) - V_{COM0}(t)$.

$V_{on(RMS)} = 0.577V_{LCD}$.

$V_{state2}(t) = V_{SEGn}(t) - V_{COM1}(t)$.

$V_{off(RMS)} = 0.333V_{LCD}$.

Figure 14. Waveforms for the 1:4 multiplex drive mode with $^1/_3$ bias

8.3 Backplane and segment outputs

All information provided in this document is subject to legal disclaimers.

© NXP B.V. 2021. All rights reserved.

8.3.1 Backplane outputs

The LCD drive section includes four backplane outputs COM0 to COM3, which must be directly connected to the LCD. The backplane output signals are generated in accordance with the selected LCD drive mode. If less than four backplane outputs are required, the unused outputs can be left open-circuit.

- In 1:3 multiplex drive mode, COM3 carries the same signal as COM1, therefore these two outputs can be tied together to give enhanced drive capabilities
- In 1:2 multiplex drive mode, COM0 and COM2, respectively, COM1 and COM3 all carry the same signals and may also be paired to increase the drive capabilities
- In static drive mode, the same signal is carried by all four backplane outputs and they can be connected in parallel for very high drive requirements

8.3.2 Segment outputs

The LCD drive section includes 40 segment outputs SEG0 to SEG39, which must be directly connected to the LCD. The segment output signals are generated in accordance with the multiplexed backplane signals and with data residing in the display registers. When less than 39 segment outputs are required, the unused segment outputs must be left open-circuit.

9 Power Sequencing

9.1 Power-on

To avoid unwanted artifacts on the display, V_{LCD} must never be asserted before V_{DD}, it is permitted to assert V_{DD} and V_{LCD} at the same time.

9.2 Power-off

Before turning the power to the device off, the display must be disabled by setting bit DE to logic 0. To avoid unwanted artifacts on the display, V_{LCD} must never be connected, while V_{DD} is switched off. It is permitted to switch off V_{DD} and V_{LCD} simultaneously.

9.3 Power sequences

Figure 15 depicts the recommended power-up and power-off sequence.

All information provided in this document is subject to legal disclaimers.

© NXP B.V. 2021. All rights reserved.

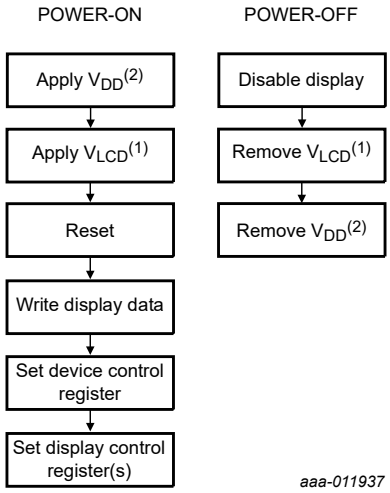

1. Can be simultaneous with V_{DD}.
2. Can be simultaneous with V_{LCD}.

Figure 15. Recommended power-up and power-off sequence

10 Bus interfaces

10.1 I²C-bus interface

The I²C-bus is for bidirectional, two-line communication between different ICs. The two lines are a Serial DAta line (SDA) and a Serial CLock line (SCL). Both lines must be connected to a positive supply via a pull-up resistor. Data transfer may be initiated only when the bus is not busy. Both data and clock lines remain HIGH when the bus is not busy. The PCA8553 acts as a target receiver when being written to and as a target transmitter when being read from.

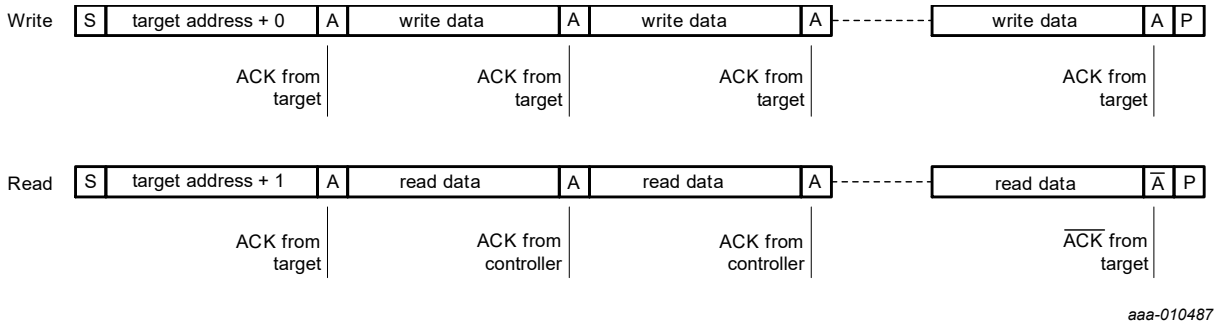

Figure 16. I²C read and write protocol

All information provided in this document is subject to legal disclaimers.

© NXP B.V. 2021. All rights reserved.

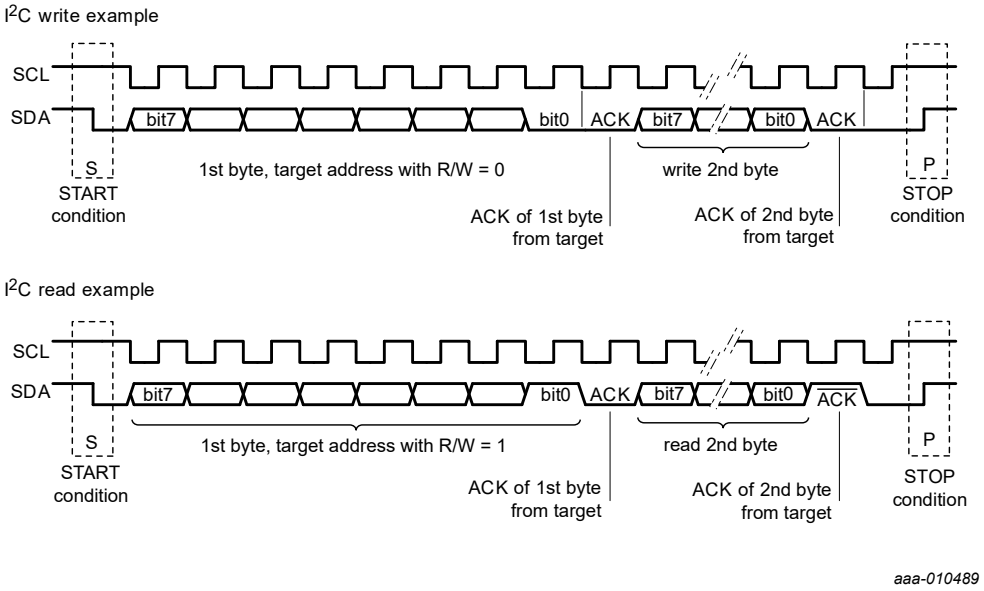

Figure 17. I²C read and write signaling

10.1.1 Bit transfer

One data bit is transferred during each clock pulse. The data on the SDA line must remain stable during the HIGH period of the clock pulse, as changes in the data line at this time are interpreted as STOP or START conditions.

10.1.2 START and STOP conditions

A HIGH-to-LOW transition of the data line while the clock is HIGH is defined as the START condition - S.

A LOW-to-HIGH transition of the data line while the clock is HIGH is defined as the STOP condition - P (see Figure 17).

10.1.3 Acknowledge

Each byte of 8 bits is followed by an acknowledge cycle. An acknowledge is defined as logic 0. A not-acknowledge is defined as logic 1.

When written to, the target will generate an acknowledge after the reception of each byte. After the acknowledge, another byte may be transmitted. It is also possible to send a STOP or START condition.

When read from, the controller receiver must generate an acknowledge after the reception of each byte. When the controller receiver no longer requires bytes to be transmitted, it must generate a not-acknowledge. After the not-acknowledge, either a STOP or START condition must be sent.

Remark: The PCA8553 omits the not-acknowledge. After the last byte read, the end of transmission is indicated by a STOP or START condition from the controller.

A detailed description of the I²C-bus specification is given in [5].

All information provided in this document is subject to legal disclaimers.

© NXP B.V. 2021. All rights reserved.

10.1.4 I²C interface protocol

The PCA8553 uses the I²C interface for data transfer. Interpretation of the data is determined by the interface protocol.

10.1.4.1 Write protocol

After the I²C target address is transmitted, the PCA8553 requires that the register address pointer is defined. It can take the value 00h to 17h. Values outside of that range will result in the transfer being ignored, however the target will still respond with acknowledge pulses.

After the register address has been transmitted, write data is transmitted. The minimum number of data write bytes is 0 and the maximum number is unlimited. After each write, the address pointer increments by one. After address 17h, the address pointer stops incrementing at 18h.

- I²C START condition
- I²C target address + write
- start register pointer
- write data
- write data
- :
- write data
- I²C STOP condition; an I²C RE-START condition is also possible.

10.1.4.2 Read protocol

When reading the PCA8553, reading starts at the current position of the address pointer. The address pointer for read data should first be defined by a write sequence.

- I²C START condition
- I²C target address + write
- start address pointer
- I²C STOP condition; an I²C RE-START condition is also possible.

After setting the address pointer, a read can be executed. After the I²C target address is transmitted, the PCA8553 will immediately output read data. After each read, the address pointer increments by one. After address 17h, the address pointer stops incrementing at 18h.

- I²C START condition
- I²C target address + read
- read data (controller sends acknowledge bit)
- read data (controller sends acknowledge bit)

10.1.4.3 I²C-bus target address

Device selection depends on the I²C-bus target address. Four different I²C-bus target addresses can be used to address the PCA8553 (see Table 12).

All information provided in this document is subject to legal disclaimers.

© NXP B.V. 2021. All rights reserved.

Table 12. I^2C target address byte

	target address							
Bit	7 MSB	6	5	4	3	2	1	0 LSB
	0	1	1	1	0	A1	A0	R/$\overline{W}$

The least significant bit of the target address byte is bit R/$\overline{W}$ (see Table 13).

Table 13. R/W-bit description

R/$\overline{W}$	Description
0	write data
1	read data

Bit 1 and bit 2 of the target address are defined by connecting the input pins A0 and A1 to either V_{SS} (logic 0) or V_{DD} (logic 1). Therefore, four instances of PCA8553 can be distinguished on the same I^2C-bus.

10.2 SPI-bus interface

Data transfer to the device is made via a 3-line SPI-bus (see Table 14). There is no dedicated output data line. The SPI-bus is initialized whenever the chip enable line pin $\overline{CE}$ is pulled down.

Table 14. Serial interface

Symbol	Function	Description
$\overline{CE}$	chip enable input[1]; active LOW	when HIGH, the interface is reset
SCL	serial clock input	input may be higher than V_{DD}
SDIO	serial data input/output	input data are sampled on the rising edge of SCL, output data are valid after the falling edge of SCL

[1] The chip enable must not be wired permanently LOW.

10.2.1 Data transmission

The chip enable signal is used to identify the transmitted data. Each data transfer is a byte with the Most Significant Bit (MSB) sent first.

The transmission is controlled by the active LOW chip enable signal $\overline{CE}$. The first byte transmitted is the register address comprising of the address pointer and the R/$\overline{W}$ bit.

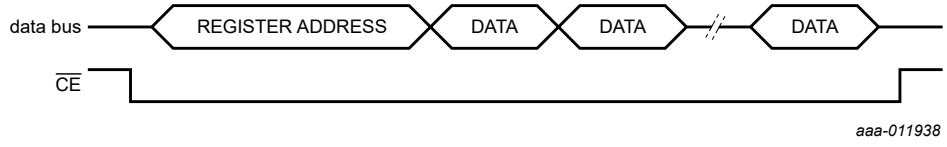

Figure 18. Data transfer overview

All information provided in this document is subject to legal disclaimers.

© NXP B.V. 2021. All rights reserved.

Table 15. Address byte definition

Bit	Symbol	Value	Description
7	R/$\overline{W}$		**data read or write selection**
		0	write data
		1	read data
6 to 5	-	00	default value
4 to 0	AP[4:0]		**pointer to register start address**
		00h to 17h	valid range; other addresses are ignored

After the register address byte, the register contents follows with the address pointer being auto-incremented after every eighth bit sent (see Section 7.1).

10.2.1.1 Write protocol

After the $\overline{CE}$ is set LOW, the PCA8553 requires that R/$\overline{W}$ and the register address pointer is defined. It can take the value 00h to 17h. Values outside of that range will result in the transfer being ignored.

After the register address has been transmitted, write data is transmitted. The minimum number of data write bytes is 0 and the maximum number is unlimited. After each write, the address pointer increments by one. After address 17h, the address pointer stops incrementing at 18h.

- $\overline{CE}$ set LOW
- R/$\overline{W}$ = 0 and register address
- write data
- write data
- :
- write data
- $\overline{CE}$ set HIGH

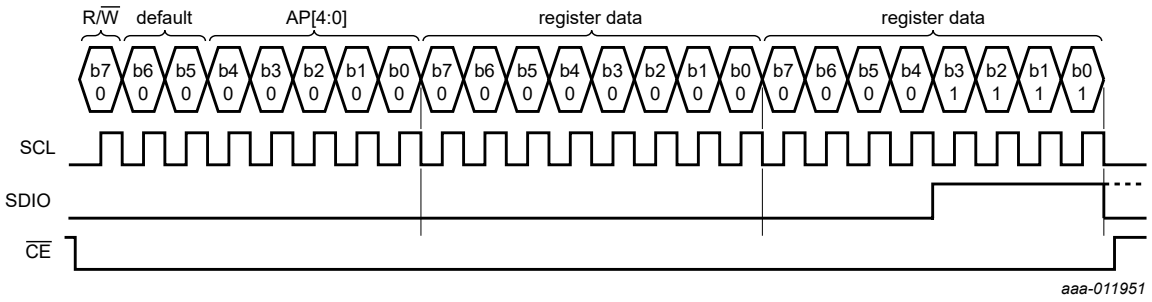

Data transfers are terminated by de-asserting $\overline{CE}$ (set $\overline{CE}$ to logic 1).

Figure 19. SPI-bus write example: writing two data bytes to registers 00h and 01h

10.2.1.2 Read protocol

When reading the PCA8553, reading starts at the defined position of the address pointer. After setting the address pointer, the read can be executed. After each read, the address pointer increments by one. After address 17h, the address pointer stops incrementing at 18h.

- $\overline{CE}$ set LOW

All information provided in this document is subject to legal disclaimers.

© NXP B.V. 2021. All rights reserved.

- R/$\overline{W}$ = 1 and register address
- read data
- read data
- :
- $\overline{CE}$ set HIGH

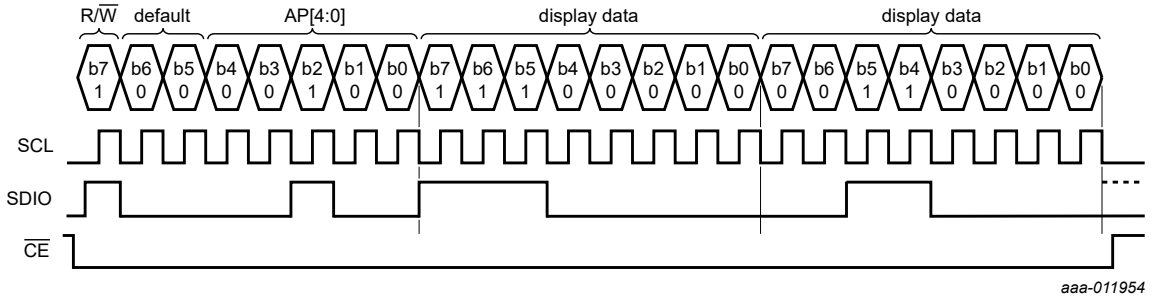

Data transfers are terminated by de-asserting $\overline{CE}$ (set $\overline{CE}$ to logic 1).

Figure 20. SPI-bus read example: reading two data bytes from registers 04h and 05h

10.3 EMC detection

The PCA8553 is ruggedized against EMC susceptibility; however it is not possible to cover all cases. To detect if a severe EMC event has occurred, it is possible to check the responsiveness of the device by reading its registers.

11 Internal circuitry

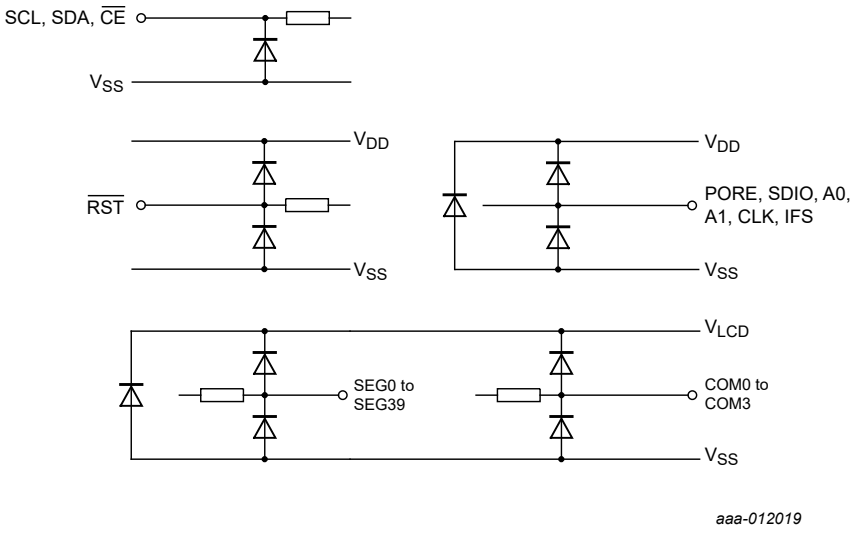

Figure 21. Device protection diagram

All information provided in this document is subject to legal disclaimers.

© NXP B.V. 2021. All rights reserved.

12 Safety notes

CAUTION



This device is sensitive to ElectroStatic Discharge (ESD). Observe precautions for handling electrostatic sensitive devices.
Such precautions are described in the *ANSI/ESD S20.20, IEC/ST 61340-5, JESD625-A* or equivalent standards.

CAUTION



Static voltages across the liquid crystal display can build up when the LCD supply voltage (V_{LCD}) is on while the IC supply voltage (V_{DD}) is off, or vice versa. This may cause unwanted display artifacts. To avoid such artifacts, V_{LCD} and V_{DD} must be applied or removed together.

13 Limiting values

Table 16. Limiting values

In accordance with the Absolute Maximum Rating System (IEC 60134).

Symbol	Parameter	Conditions		Min	Max	Unit
V_{DD}	supply voltage			-0.5	+6.5	V
V_{LCD}	LCD supply voltage			-0.5	+6.5	V
V_I	input voltage			-0.5	+6.5	V
V_O	output voltage			-0.5	+6.5	V
I_I	input current			-10	+10	mA
I_O	output current			-10	+10	mA
I_{DD}	supply current			-50	+50	mA
$I_{DD(LCD)}$	LCD supply current			-50	+50	mA
I_{SS}	ground supply current			-50	+50	mA
P_{tot}	total power dissipation			-	100	mW
P_o	output power			-	100	mW
V_{ESD}	electrostatic discharge voltage	HBM	[1]			
		on pins SCL and SDA/$\overline{CE}$		-	±2 000	V
		on all other pins		-	±3 500	V
		CDM	[2]	-	±1 250	V
I_{lu}	latch-up current		[3]	-	200	mA
T_{stg}	storage temperature		[4]	-55	+150	°C
T_{amb}	ambient temperature	operating device		-40	+105	°C

[1] Pass level; Human Body Model (HBM), according to [1].
[2] Pass level; Charged-Device Model (CDM), according to [2].
[3] Pass level; latch-up testing according to [3] at maximum ambient temperature ($T_{amb(max)}$).
[4] According to the store and transport requirements (see [6]) the devices have to be stored at a temperature of +8 °C to +45 °C and a humidity of 25 % to 75 %.

All information provided in this document is subject to legal disclaimers.

© NXP B.V. 2021. All rights reserved.

14 Characteristics

Table 17. Electrical characteristics

V_{DD} = 1.8 V to 5.5 V; V_{SS} = 0 V; V_{LCD} = 1.8 V to 5.5 V; T_{amb} = -40 °C to +105 °C; unless otherwise specified.

Symbol	Parameter	Conditions		Min	Typ	Max	Unit
Supplies							
V_{DD}	supply voltage			1.8	-	5.5	V
V_{LCD}	LCD supply voltage			1.8	-	5.5	V
I_{DD}	supply current	f_{fr} = 64 Hz; no bus activity					
		V_{DD} = 3.3 V; T_{amb} = 25 °C		-	0.6	-	µA
		V_{DD} = 5.5 V; T_{amb} = 105 °C		-	1.8	3.0	µA
$I_{DD(LCD)}$	LCD supply current	f_{fr} = 64 Hz; no bus activity	[1]				
		V_{LCD} = 5.5 V; T_{amb} = 105 °C; BOOST = 0; no display load		-	3.7	4.7	µA
		V_{LCD} = 3.3 V; T_{amb} = 25 °C					
		BOOST = 0; no display load		-	2.5	-	µA
		BOOST = 0; display enabled; display load C_L = 1.6 nF		-	5.0	-	µA
		BOOST = 1; display enabled; display load C_L = 1.6 nF		-	6.0	-	µA
V_{IL}	LOW-level input voltage			V_{SS}	-	$0.3V_{DD}$	V
V_{IH}	HIGH-level input voltage		[2]	$0.7V_{DD}$	-	V_{DD}	V
I_{OL}	LOW-level output current	output sink current; V_{OL} = 0.4 V; V_{DD} = 5 V					
		on pin CLK		2	-	-	mA
		on pin SDIO		2	-	-	mA
		on pin SDA		3	-	-	mA
I_{OH}	HIGH-level output current	output source current; on pins SDIO, CLK; V_{OH} = 4.6 V; V_{DD} = 5 V		2	-	-	mA
I_L	leakage current	any input pin except for $\overline{RST}$		-	0	-	nA
		after ESD event		-1 000	-	+1 000	nA
$R_{pu(RST_n)}$	pull-up resistance on pin RST_N			-	100	-	kΩ
LCD outputs (pins SEG0 to SEG39 and COM0 to COM3)							
ΔV_o	output voltage variation	V_{LCD} = 5 V		-100	-	+100	mV

All information provided in this document is subject to legal disclaimers.

© NXP B.V. 2021. All rights reserved.

Table 17. Electrical characteristics...*continued*

V_{DD} = 1.8 V to 5.5 V; V_{SS} = 0 V; V_{LCD} = 1.8 V to 5.5 V; T_{amb} = -40 °C to +105 °C; unless otherwise specified.

Symbol	Parameter	Conditions		Min	Typ	Max	Unit
R_o	output resistance	V_{LCD} = 5 V	[3]	-	1.5	3	kΩ

[1] For typical values, also see Figure 22 to Figure 24.
[2] I^2C pins SCL and SDA have no diode to V_{DD} and may be driven up to 5.5 V.
[3] Outputs measured one at a time.

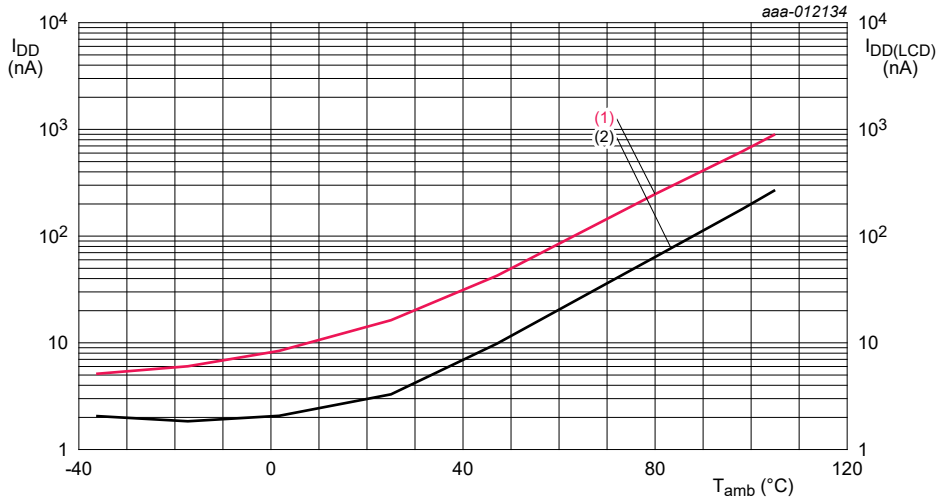

V_{DD} = 5.5 V, V_{LCD} = 5.5 V; power-down mode.

1. I_{DD}.
2. $I_{DD(LCD)}$.

Figure 22. Typical I_{DD} and $I_{DD(LCD)}$ in power-down mode as function of temperature

All information provided in this document is subject to legal disclaimers.

© NXP B.V. 2021. All rights reserved.

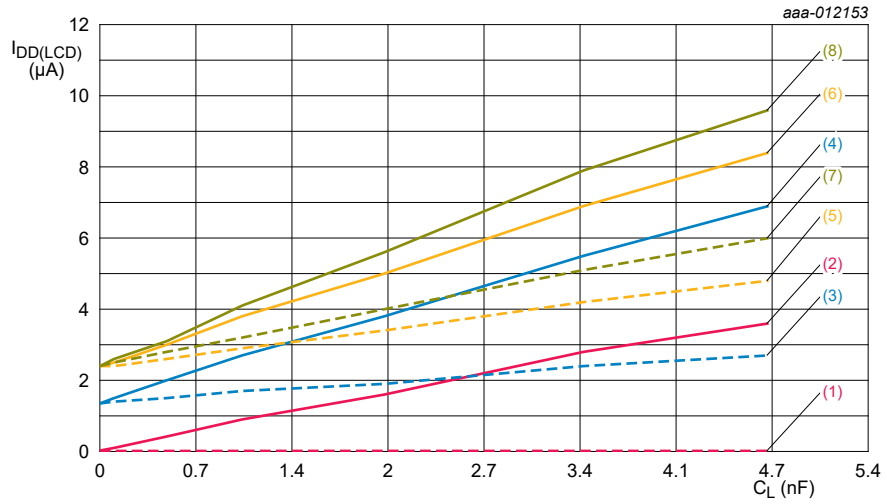

T_{amb} = 25 °C; V_{LCD} = 3.3 V; V_{DD} = 3.3 V; f_{fr} = 64 Hz, BOOST = 0.

1. Static, all segments/elements off.
2. Static, all segments/elements on.
3. MUX 1:2, bias level ½, all segments/elements off.
4. MUX 1:2, bias level ½, all segments/elements on.
5. MUX 1:3, bias level ⅓, all segments/elements off.
6. MUX 1:3, bias level ⅓, all segments/elements on.
7. MUX 1:4, bias level ⅓, all segments/elements off.
8. MUX 1:4, bias level ⅓, all segments/elements on.

Figure 23. Typical $I_{DD(LCD)}$ as function of display load

All information provided in this document is subject to legal disclaimers.

© NXP B.V. 2021. All rights reserved.

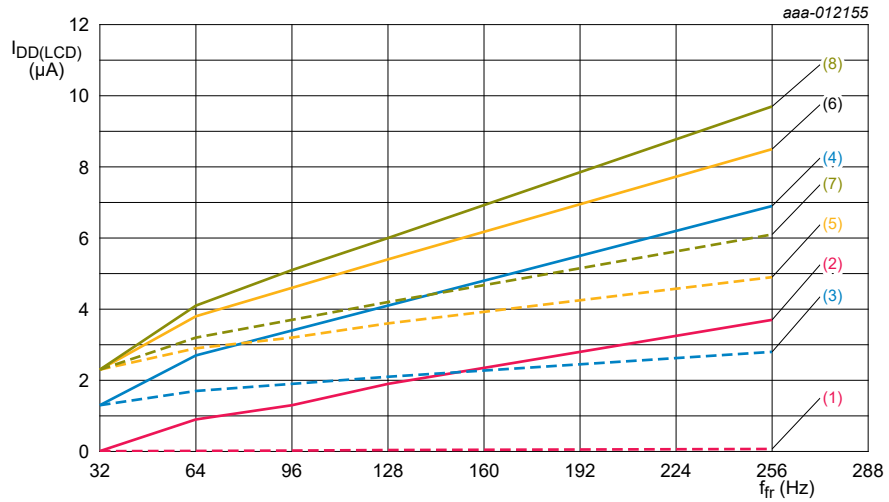

T_{amb} = 25 °C; V_{LCD} = 3.3 V; V_{DD} = 3.3 V; f_{fr} = 64 Hz, BOOST = 0, C_L = 1.6 nF.

1. Static, all segments/elements off.
2. Static, all segments/elements on.
3. MUX 1:2, bias level ½, all segments/elements off.
4. MUX 1:2, bias level ½, all segments/elements on.
5. MUX 1:3, bias level ⅓, all segments/elements off.
6. MUX 1:3, bias level ⅓, all segments/elements on.
7. MUX 1:4, bias level ⅓, all segments/elements off.
8. MUX 1:4, bias level ⅓, all segments/elements on.

Figure 24. Typical $I_{DD(LCD)}$ as function of f_{fr}

Table 18. Frequency characteristics

V_{DD} = 1.8 V to 5.5 V; V_{SS} = 0 V; V_{LCD} = 1.8 V to 5.5 V; T_{amb} = -40 °C to +105 °C; unless otherwise specified.

Symbol	Parameter	Conditions		Min	Typ	Max	Unit
f_{fr}	frame frequency	FF[2:0] = 000		-	32	-	Hz
		FF[2:0] = 001		42	64	86	Hz
		FF[2:0] = 010		-	96	-	Hz
		FF[2:0] = 011		-	128	-	Hz
		FF[2:0] = 100		-	160	-	Hz
		FF[2:0] = 101		-	192	-	Hz
		FF[2:0] = 110		-	224	-	Hz
		FF[2:0] = 111		-	256	-	Hz
$f_{clk(int)}$	internal clock frequency	f_{fr} = 64 Hz, n_{MUX} = 4	[1]	-	1024	-	Hz
$f_{clk(ext)}$	external clock frequency		[1]	-	-	4096	Hz
$t_{clk(H)}$	HIGH-level clock time	external clock		60	-	-	µs
$t_{clk(L)}$	LOW-level clock time	external clock		60	-	-	µs
$t_{w(rst)}$	reset pulse width	on pin $\overline{RST}$		10	-	-	µs

[1] $f_{clk(int)} = 2 \cdot f_{fr} \cdot n_{MUX}$ or $f_{clk(ext)} = 2 \cdot f_{fr} \cdot n_{MUX}$ respectively (see Table 5 and Table 6).

All information provided in this document is subject to legal disclaimers.

© NXP B.V. 2021. All rights reserved.

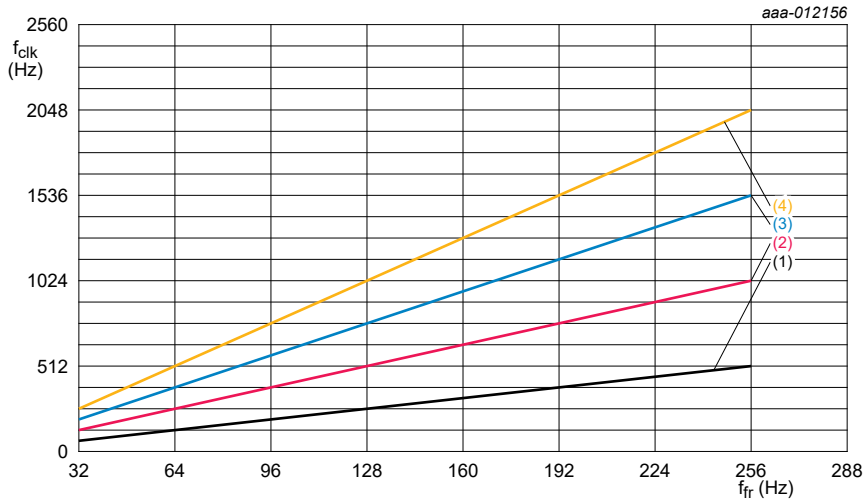

1. n_{MUX} = 1.
2. n_{MUX} = 2.
3. n_{MUX} = 3.
4. n_{MUX} = 4.

Figure 25. Relation of frame frequency (f_{fr}), clock frequency (f_{clk}) and multiplex-rate (n_{MUX})

Table 19. I^2C-bus characteristics

V_{DD} = 1.8 V to 5.5 V; V_{SS} = 0 V; T_{amb} = -40 °C to +105 °C; unless otherwise specified; all timing values are valid within the operating supply voltage and T_{amb} range and are referenced to V_{IL} and V_{IH} with an input voltage swing of V_{SS} to V_{DD}. [1]

Symbol	Parameter	Conditions		Min	Typ	Max	Unit
Pin SCL							
f_{SCL}	SCL clock frequency			-	-	400	kHz
t_{LOW}	LOW period of the SCL clock			1.3	-	-	µs
t_{HIGH}	HIGH period of the SCL clock			0.6	-	-	µs
Pin SDA							
$t_{SU;DAT}$	data set-up time			100	-	-	ns
$t_{HD;DAT}$	data hold time			0	-	-	ns
Pins SCL and SDA							
t_{BUF}	bus free time between a STOP and START condition			1.3	-	-	µs
$t_{SU;STO}$	set-up time for STOP condition			0.6	-	-	µs
$t_{HD;STA}$	hold time (repeated) START condition			0.6	-	-	µs
$t_{SU;STA}$	set-up time for a repeated START condition			0.6	-	-	µs

All information provided in this document is subject to legal disclaimers.

© NXP B.V. 2021. All rights reserved.

Table 19. I^2C-bus characteristics...*continued*

V_{DD} = 1.8 V to 5.5 V; V_{SS} = 0 V; T_{amb} = -40 °C to +105 °C; unless otherwise specified; all timing values are valid within the operating supply voltage and T_{amb} range and are referenced to V_{IL} and V_{IH} with an input voltage swing of V_{SS} to V_{DD}. [1]

Symbol	Parameter	Conditions		Min	Typ	Max	Unit
t_r	rise time of both SDA and SCL signals	f_{SCL} = 400 kHz		-	-	0.3	µs
t_f	fall time of both SDA and SCL signals			-	-	0.3	µs
C_b	capacitive load for each bus line			-	-	400	pF
$t_{w(spike)}$	spike pulse width	on the I^2C-bus		-	-	50	ns

[1] The I^2C-bus interface of PCA8553 is 5 V tolerant.

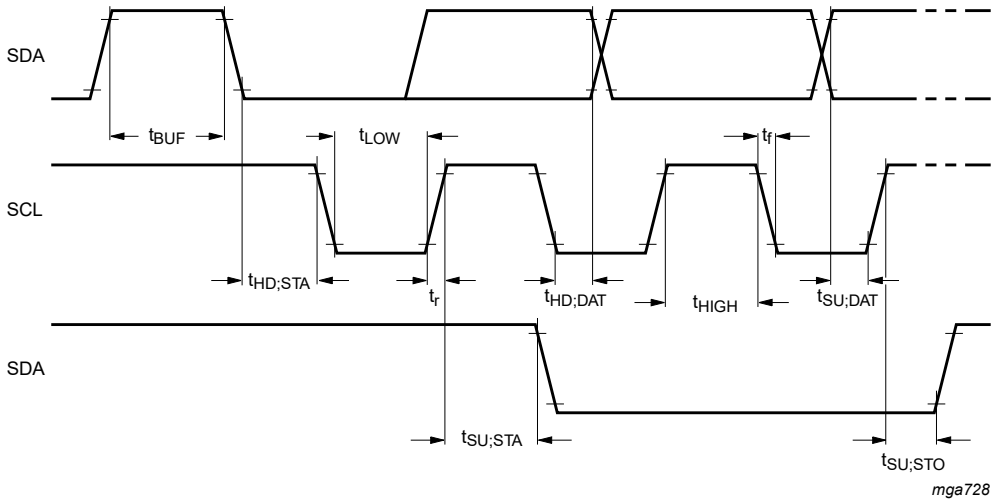

Figure 26. I^2C-bus timing waveforms

Table 20. SPI-bus characteristics

V_{DD} = 1.8 V to 5.5 V; V_{SS} = 0 V; T_{amb} = -40 °C to +105 °C; unless otherwise specified; all timing values are valid within the operating supply voltage and T_{amb} range and are referenced to V_{IL} and V_{IH} with an input voltage swing of V_{SS} to V_{DD}.

Symbol	Parameter	Conditions		Min	Typ	Max	Unit
Pin SCL							
f_{SCL}	SCL clock frequency			-	-	5	MHz
t_{LOW}	LOW period of the SCL clock			150	-	-	ns
t_{HIGH}	HIGH period of the SCL clock			80	-	-	ns
t_r	rise time			-	-	100	ns
t_f	fall time			-	-	100	ns
Pin $\overline{CE}$							

All information provided in this document is subject to legal disclaimers.

© NXP B.V. 2021. All rights reserved.

Table 20. SPI-bus characteristics...*continued*

V_{DD} = 1.8 V to 5.5 V; V_{SS} = 0 V; T_{amb} = -40 °C to +105 °C; unless otherwise specified; all timing values are valid within the operating supply voltage and T_{amb} range and are referenced to V_{IL} and V_{IH} with an input voltage swing of V_{SS} to V_{DD}.

Symbol	Parameter	Conditions		Min	Typ	Max	Unit
$t_{su(CE_N)}$	CE_N set-up time			30	-	-	ns
$t_{h(CE_N)}$	CE_N hold time			10	-	-	ns
$t_{rec(CE_N)}$	CE_N recovery time			70	-	-	ns
Pin SDIO							
t_{su}	set-up time	write data		5	-	-	ns
t_h	hold time	write data		50	-	-	ns
$t_{d(R)SDIO}$	SDIO read delay time	C_L = 50 pF		-	-	150	ns
$t_{dis(SDIO)}$	SDIO disable time	no load		-	-	50	ns
$t_{t(SDI-SDO)}$	transition time from SDI to SDO	write to read mode		0	-	-	ns

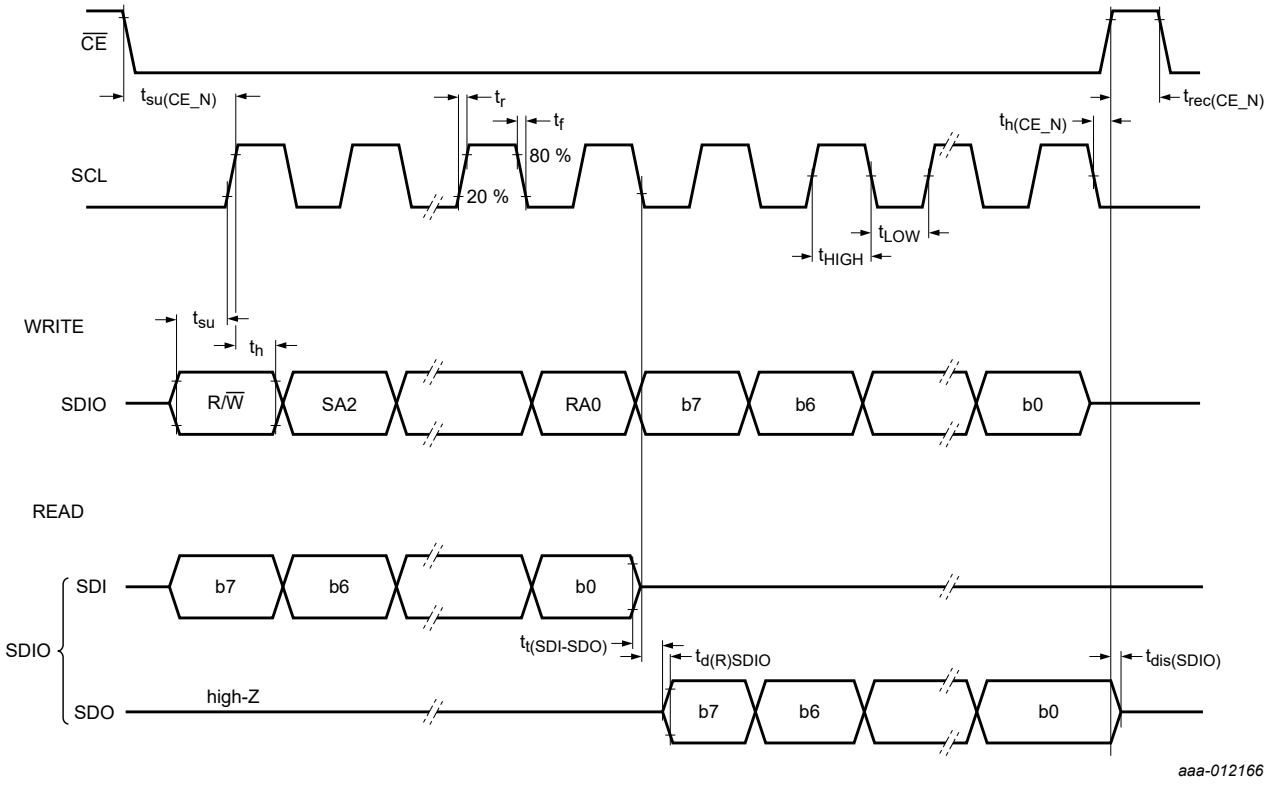

Figure 27. SPI-bus timing waveforms

All information provided in this document is subject to legal disclaimers.

© NXP B.V. 2021. All rights reserved.

15 Application information

15.1 Power-on Reset

The built-in POR block acts on the rising edge of the V_{DD} supply voltage. Depending on the V_{DD} rising edge in the application, the POR may not work properly. Therefore to ensure proper device operation it is required to send nine clock pulses immediately after power-on (see also UM10204).

15.2 I^2C acknowledge after power-on

If the bus does not show an acknowledge at the first access, the command should be sent a second time.

15.3 Resistors on I/O pins

The pins A0, A1, PORE, and IFS comprise internal, latching pull-down devices, which keep these inputs at a low potential when left open. If an input is supposed to be at logic 0 potential, this pin can be either connected to V_{SS} or left open.

In case a pin is supposed to be at logic 1 potential, it must be connected to V_{DD} to avoid any cross-current during power-up. A series resistance between V_{DD} and the associated pin must not exceed 1 kΩ to ensure proper functionality.

16 Test information

16.1 Quality information

This product has been qualified in accordance with the Automotive Electronics Council (AEC) standard *Q100 - Failure mechanism based stress test qualification for integrated circuits*, and is suitable for use in automotive applications.

All information provided in this document is subject to legal disclaimers.

© NXP B.V. 2021. All rights reserved.

17 Package outline

TSSOP56: plastic thin shrink small outline package; 56 leads; body width 6.1 mm **SOT364-1**

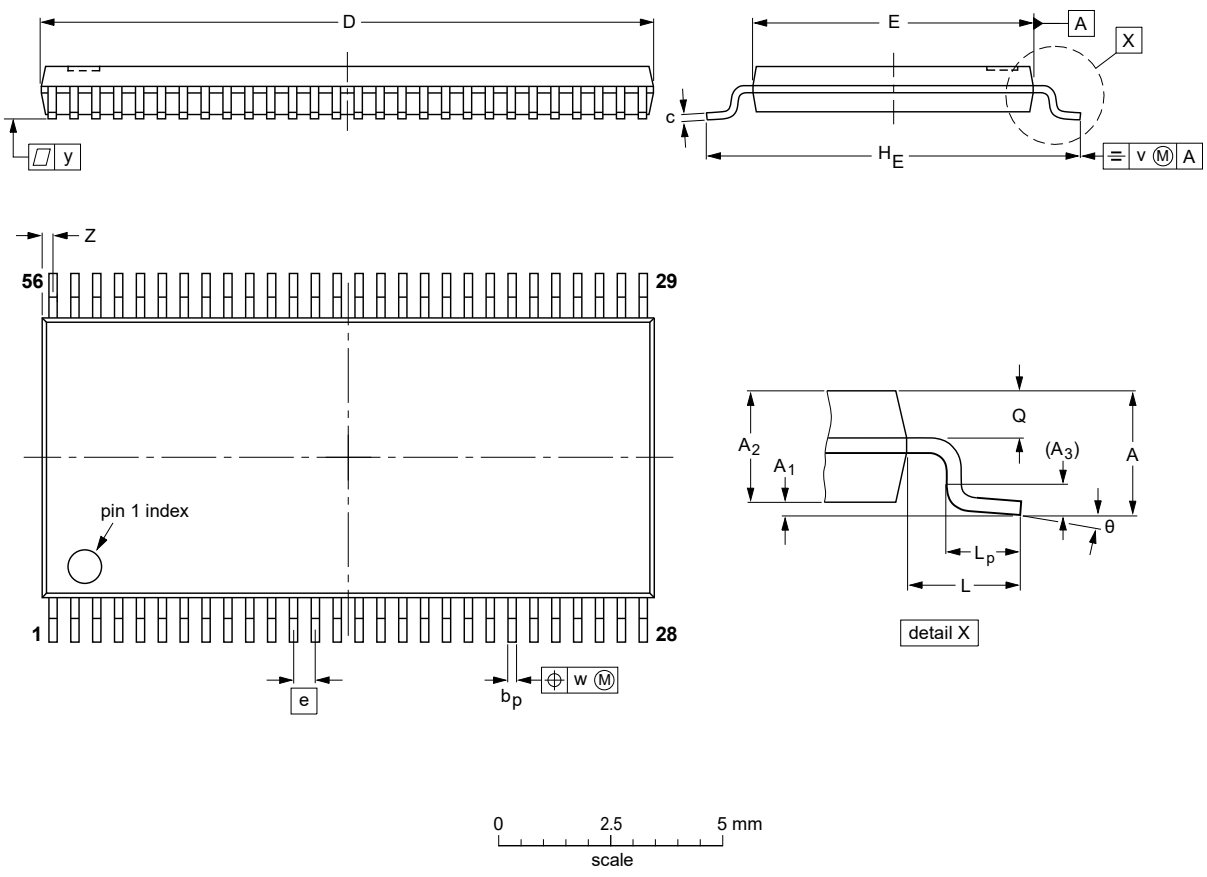

DIMENSIONS (mm are the original dimensions).

UNIT	A max.	A_1	A_2	A_3	b_p	c	$D^{(1)}$	$E^{(2)}$	e	H_E	L	L_p	Q	v	w	y	Z	θ
mm	1.2	0.15 0.05	1.05 0.85	0.25	0.28 0.17	0.2 0.1	14.1 13.9	6.2 6.0	0.5	8.3 7.9	1	0.8 0.4	0.50 0.35	0.25	0.08	0.1	0.5 0.1	8° 0°

Notes

1. Plastic or metal protrusions of 0.15 mm maximum per side are not included.
2. Plastic interlead protrusions of 0.25 mm maximum per side are not included.

OUTLINE VERSION	REFERENCES				EUROPEAN PROJECTION	ISSUE DATE
	IEC	JEDEC	JEITA			
SOT364-1		MO-153				~~99-12-27~~ 03-02-19

Figure 28. Package outline SOT364-1 (TSSOP56) of PCA8553DTT

All information provided in this document is subject to legal disclaimers.

© NXP B.V. 2021. All rights reserved.

18 Handling information

All input and output pins are protected against ElectroStatic Discharge (ESD) under normal handling. When handling Metal-Oxide Semiconductor (MOS) devices ensure that all normal precautions are taken as described in *JESD625-A*, *IEC 61340-5* or equivalent standards.

19 Packing information

19.1 Tape and reel information

For tape and reel packing information, see [4].

20 Soldering of SMD packages

This text provides a very brief insight into a complex technology. A more in-depth account of soldering ICs can be found in Application Note *AN10365 "Surface mount reflow soldering description"*.

20.1 Introduction to soldering

Soldering is one of the most common methods through which packages are attached to Printed Circuit Boards (PCBs), to form electrical circuits. The soldered joint provides both the mechanical and the electrical connection. There is no single soldering method that is ideal for all IC packages. Wave soldering is often preferred when through-hole and Surface Mount Devices (SMDs) are mixed on one printed wiring board; however, it is not suitable for fine pitch SMDs. Reflow soldering is ideal for the small pitches and high densities that come with increased miniaturization.

20.2 Wave and reflow soldering

Wave soldering is a joining technology in which the joints are made by solder coming from a standing wave of liquid solder. The wave soldering process is suitable for the following:

- Through-hole components
- Leaded or leadless SMDs, which are glued to the surface of the printed circuit board

Not all SMDs can be wave soldered. Packages with solder balls, and some leadless packages which have solder lands underneath the body, cannot be wave soldered. Also, leaded SMDs with leads having a pitch smaller than ~0.6 mm cannot be wave soldered, due to an increased probability of bridging.

The reflow soldering process involves applying solder paste to a board, followed by component placement and exposure to a temperature profile. Leaded packages, packages with solder balls, and leadless packages are all reflow solderable.

Key characteristics in both wave and reflow soldering are:

- Board specifications, including the board finish, solder masks and vias
- Package footprints, including solder thieves and orientation
- The moisture sensitivity level of the packages

All information provided in this document is subject to legal disclaimers.

© NXP B.V. 2021. All rights reserved.

- Package placement
- Inspection and repair
- Lead-free soldering versus SnPb soldering

20.3 Wave soldering

Key characteristics in wave soldering are:

- Process issues, such as application of adhesive and flux, clinching of leads, board transport, the solder wave parameters, and the time during which components are exposed to the wave
- Solder bath specifications, including temperature and impurities

20.4 Reflow soldering

Key characteristics in reflow soldering are:

- Lead-free versus SnPb soldering; note that a lead-free reflow process usually leads to higher minimum peak temperatures (see Figure 29) than a SnPb process, thus reducing the process window
- Solder paste printing issues including smearing, release, and adjusting the process window for a mix of large and small components on one board
- Reflow temperature profile; this profile includes preheat, reflow (in which the board is heated to the peak temperature) and cooling down. It is imperative that the peak temperature is high enough for the solder to make reliable solder joints (a solder paste characteristic). In addition, the peak temperature must be low enough that the packages and/or boards are not damaged. The peak temperature of the package depends on package thickness and volume and is classified in accordance with Table 21 and Table 22

Table 21. SnPb eutectic process (from J-STD-020D)

Package thickness (mm)	Package reflow temperature (°C)	
	Volume (mm³)	
	< 350	≥ 350
< 2.5	235	220
≥ 2.5	220	220

Table 22. Lead-free process (from J-STD-020D)

Package thickness (mm)	Package reflow temperature (°C)		
	Volume (mm³)		
	< 350	350 to 2000	> 2000
< 1.6	260	260	260
1.6 to 2.5	260	250	245
> 2.5	250	245	245

Moisture sensitivity precautions, as indicated on the packing, must be respected at all times.

All information provided in this document is subject to legal disclaimers.

© NXP B.V. 2021. All rights reserved.

Studies have shown that small packages reach higher temperatures during reflow soldering, see Figure 29.

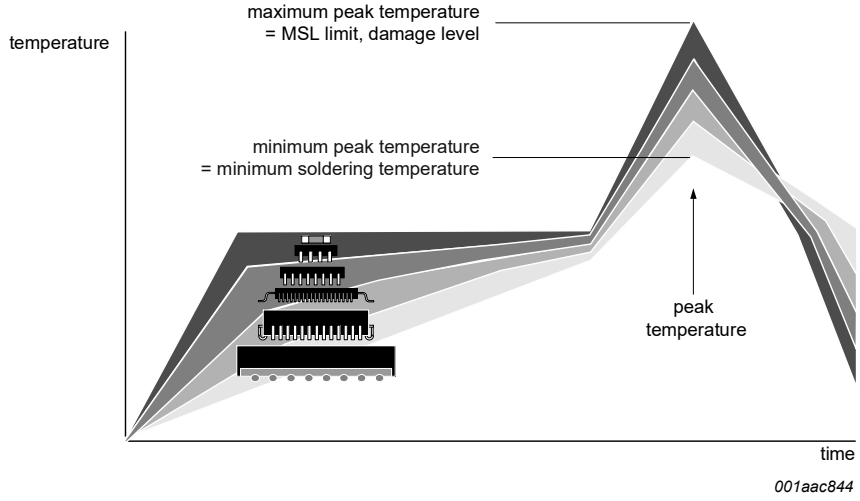

MSL: Moisture Sensitivity Level

Figure 29. Temperature profiles for large and small components

For further information on temperature profiles, refer to Application Note *AN10365 "Surface mount reflow soldering description"*.

All information provided in this document is subject to legal disclaimers.

© NXP B.V. 2021. All rights reserved.

21 Footprint information

Footprint information for reflow soldering of TSSOP56 package **SOT364-1**

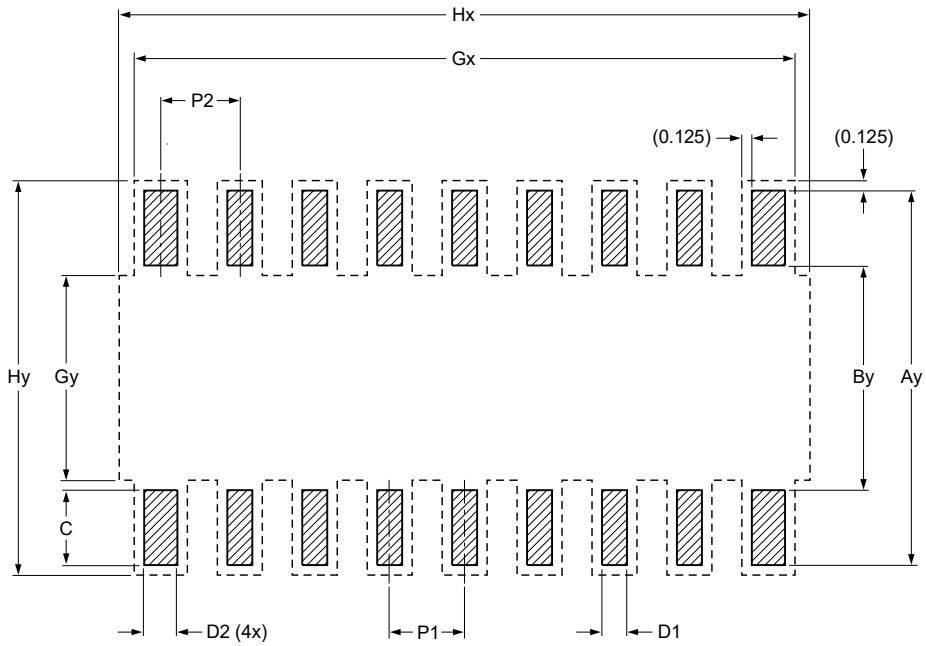

Generic footprint pattern

Refer to the package outline drawing for actual layout

solder land

occupied area

DIMENSIONS in mm

P1	P2	Ay	By	C	D1	D2	Gx	Gy	Hx	Hy
0.500	0.560	8.900	6.100	1.400	0.280	0.400	14.270	7.000	16.600	9.150

sot364-1_fr

Figure 30. Footprint information for reflow soldering of SOT364-1 (TSSOP56) of PCA8553DTT

All information provided in this document is subject to legal disclaimers.

© NXP B.V. 2021. All rights reserved.

22 Appendix

22.1 LCD segment driver selection

Table 23. Selection of LCD segment drivers

Type name	Number of elements at MUX							V_{DD} (V)	V_{LCD} (V)	f_{fr} (Hz)	V_{LCD} (V) charge pump	V_{LCD} (V) temperature compensat.	T_{amb} (°C)	Interface	Package	AEC-Q100
	1:1	1:2	1:3	1:4	1:6	1:8	1:9									
PCA8553DTT	40	80	120	160	-	-	-	1.8 to 5.5	1.8 to 5.5	32 to 256[1]	N	N	-40 to 105	I^2C / SPI	TSSOP56	Y
PCA8546ATT	-	-	-	176	-	-	-	1.8 to 5.5	2.5 to 9	60 to 300[1]	N	N	-40 to 95	I^2C	TSSOP56	Y
PCA8546BTT	-	-	-	176	-	-	-	1.8 to 5.5	2.5 to 9	60 to 300[1]	N	N	-40 to 95	SPI	TSSOP56	Y
PCA8547AHT	44	88	-	176	-	-	-	1.8 to 5.5	2.5 to 9	60 to 300[1]	Y	Y	-40 to 95	I^2C	TQFP64	Y
PCA8547BHT	44	88	-	176	-	-	-	1.8 to 5.5	2.5 to 9	60 to 300[1]	Y	Y	-40 to 95	SPI	TQFP64	Y
PCF85134HL	60	120	180	240	-	-	-	1.8 to 5.5	2.5 to 6.5	82	N	N	-40 to 85	I^2C	LQFP80	N
PCA85134H	60	120	180	240	-	-	-	1.8 to 5.5	2.5 to 8	82	N	N	-40 to 95	I^2C	LQFP80	Y
PCA8543AHL	60	120	-	240	-	-	-	2.5 to 5.5	2.5 to 9	60 to 300[1]	Y	Y	-40 to 105	I^2C	LQFP80	Y
PCF8545ATT	-	-	-	176	252	320	-	1.8 to 5.5	2.5 to 5.5	60 to 300[1]	N	N	-40 to 85	I^2C	TSSOP56	N
PCF8545BTT	-	-	-	176	252	320	-	1.8 to 5.5	2.5 to 5.5	60 to 300[1]	N	N	-40 to 85	SPI	TSSOP56	N
PCF8536AT	-	-	-	176	252	320	-	1.8 to 5.5	2.5 to 9	60 to 300[1]	N	N	-40 to 85	I^2C	TSSOP56	N
PCF8536BT	-	-	-	176	252	320	-	1.8 to 5.5	2.5 to 9	60 to 300[1]	N	N	-40 to 85	SPI	TSSOP56	N
PCA8536AT	-	-	-	176	252	320	-	1.8 to 5.5	2.5 to 9	60 to 300[1]	N	N	-40 to 95	I^2C	TSSOP56	Y
PCA8536BT	-	-	-	176	252	320	-	1.8 to 5.5	2.5 to 9	60 to 300[1]	N	N	-40 to 95	SPI	TSSOP56	Y
PCF8537AH	44	88	-	176	276	352	-	1.8 to 5.5	2.5 to 9	60 to 300[1]	Y	Y	-40 to 85	I^2C	TQFP64	N
PCF8537BH	44	88	-	176	276	352	-	1.8 to 5.5	2.5 to 9	60 to 300[1]	Y	Y	-40 to 85	SPI	TQFP64	N
PCA8537AH	44	88	-	176	276	352	-	1.8 to 5.5	2.5 to 9	60 to 300[1]	Y	Y	-40 to 95	I^2C	TQFP64	Y
PCA8537BH	44	88	-	176	276	352	-	1.8 to 5.5	2.5 to 9	60 to 300[1]	Y	Y	-40 to 95	SPI	TQFP64	Y
PCA9620H	60	120	-	240	320	480	-	2.5 to 5.5	2.5 to 9	60 to 300[1]	Y	Y	-40 to 105	I^2C	LQFP80	Y
PCA9620U	60	120	-	240	320	480	-	2.5 to 5.5	2.5 to 9	60 to 300[1]	Y	Y	-40 to 105	I^2C	Bare die	Y
PCF8576DU	40	80	120	160	-	-	-	1.8 to 5.5	2.5 to 6.5	77	N	N	-40 to 85	I^2C	Bare die	N

All information provided in this document is subject to legal disclaimers.

© NXP B.V. 2021. All rights reserved.

Table 23. Selection of LCD segment drivers...*continued*

Type name	Number of elements at MUX							V_{DD} (V)	V_{LCD} (V)	f_{fr} (Hz)	V_{LCD} (V) charge pump	V_{LCD} (V) temperature compensat.	T_{amb} (°C)	Interface	Package	AEC-Q100
	1:1	1:2	1:3	1:4	1:6	1:8	1:9									
PCF8576EUG	40	80	120	160	-	-	-	1.8 to 5.5	2.5 to 6.5	77	N	N	-40 to 85	I^2C	Bare die	N
PCA8576FUG	40	80	120	160	-	-	-	1.8 to 5.5	2.5 to 8	200	N	N	-40 to 105	I^2C	Bare die	Y
PCF85133U	80	160	240	320	-	-	-	1.8 to 5.5	2.5 to 6.5	82, 110[2]	N	N	-40 to 85	I^2C	Bare die	N
PCA85133U	80	160	240	320	-	-	-	1.8 to 5.5	2.5 to 8	82, 110[2]	N	N	-40 to 95	I^2C	Bare die	Y
PCA85233UG	80	160	240	320	-	-	-	1.8 to 5.5	2.5 to 8	150, 220[2]	N	N	-40 to 105	I^2C	Bare die	Y
PCF85132U	160	320	480	640	-	-	-	1.8 to 5.5	1.8 to 8	60 to 90[1]	N	N	-40 to 85	I^2C	Bare die	N
PCA8530DUG	102	204	-	408	-	-	-	2.5 to 5.5	4 to 12	45 to 300[1]	Y	Y	-40 to 105	I^2C / SPI	Bare die	Y
PCA85132U	160	320	480	640	-	-	-	1.8 to 5.5	1.8 to 8	60 to 90[1]	N	N	-40 to 95	I^2C	Bare die	Y
PCA85232U	160	320	480	640	-	-	-	1.8 to 5.5	1.8 to 8	117 to 176[1]	N	N	-40 to 95	I^2C	Bare die	Y
PCF8538UG	102	204	-	408	612	816	918	2.5 to 5.5	4 to 12	45 to 300[1]	Y	Y	-40 to 85	I^2C / SPI	Bare die	N
PCA8538UG	102	204	-	408	612	816	918	2.5 to 5.5	4 to 12	45 to 300[1]	Y	Y	-40 to 105	I^2C / SPI	Bare die	Y

[1] Software programmable.
[2] Hardware selectable.

All information provided in this document is subject to legal disclaimers.

© NXP B.V. 2021. All rights reserved.

23 Abbreviations

Table 24. Abbreviations

Acronym	Description
CDM	Charged-Device Model
DC	Direct Current
EMC	ElectroMagnetic Compatibility
ESD	ElectroStatic Discharge
HBM	Human Body Model
I^2C	Inter-Integrated Circuit bus
IC	Integrated Circuit
LCD	Liquid Crystal Display
LSB	Least Significant Bit
MSB	Most Significant Bit
MSL	Moisture Sensitivity Level
MUX	Multiplexer
PCB	Printed-Circuit Board
POR	Power-On Reset
RC	Resistance-Capacitance
RMS	Root Mean Square
SCL	Serial CLock line
SDA	Serial DAta line
SMD	Surface-Mount Device
SPI	Serial Peripheral Interface

24 References

[1] JESD22-A114 Electrostatic Discharge (ESD) Sensitivity Testing Human Body Model (HBM)

[2] JESD22-C101 Field-Induced Charged-Device Model Test Method for Electrostatic-Discharge-Withstand Thresholds of Microelectronic Components

[3] JESD78 IC Latch-Up Test

[4] SOT364-1_118 TSSOP56; Reel pack; SMD, 13", packing information

[5] UM10204 I^2C-bus specification and user manual

[6] UM10569 Store and transport requirements

All information provided in this document is subject to legal disclaimers.

© NXP B.V. 2021. All rights reserved.

25 Revision history

Table 25. Revision history

Document ID	Release date	Data sheet status	Change notice	Supersedes
PCA8553 v.4	20211001	Product data sheet	PCN202102010F01	PCA8553 v.3
Modifications:	• Updated Ordering information. See Change notice column. • Global: The terms "master" and "slave" changed to "controller" and "target" to comply with NXP inclusive language policy.			
PCA8553 v.3	20210420	Product data sheet	202104034I	PCA8553 v.2
Modifications:	• Updated ordering information to new format • Section 7.3: Added "See also application information..." • Section 7.3.2: Added "The bus interface is initialized" • Section 7.3.3: Removed "The bus interface is initialized" • Updated Section 15.1			
PCA8553 v.2	20150327	Product data sheet	-	PCA8553 v.1
Modifications:	• Fixed typo • Added Figure 4			
PCA8553 v.1	20150216	Product data sheet	-	-

All information provided in this document is subject to legal disclaimers.

© NXP B.V. 2021. All rights reserved.

26 Legal information

26.1 Data sheet status

Document status[1][2]	Product status[3]	Definition
Objective [short] data sheet	Development	This document contains data from the objective specification for product development.
Preliminary [short] data sheet	Qualification	This document contains data from the preliminary specification.
Product [short] data sheet	Production	This document contains the product specification.

[1] Please consult the most recently issued document before initiating or completing a design.
[2] The term 'short data sheet' is explained in section "Definitions".
[3] The product status of device(s) described in this document may have changed since this document was published and may differ in case of multiple devices. The latest product status information is available on the Internet at URL http://www.nxp.com.

26.2 Definitions

Draft — A draft status on a document indicates that the content is still under internal review and subject to formal approval, which may result in modifications or additions. NXP Semiconductors does not give any representations or warranties as to the accuracy or completeness of information included in a draft version of a document and shall have no liability for the consequences of use of such information.

Short data sheet — A short data sheet is an extract from a full data sheet with the same product type number(s) and title. A short data sheet is intended for quick reference only and should not be relied upon to contain detailed and full information. For detailed and full information see the relevant full data sheet, which is available on request via the local NXP Semiconductors sales office. In case of any inconsistency or conflict with the short data sheet, the full data sheet shall prevail.

Product specification — The information and data provided in a Product data sheet shall define the specification of the product as agreed between NXP Semiconductors and its customer, unless NXP Semiconductors and customer have explicitly agreed otherwise in writing. In no event however, shall an agreement be valid in which the NXP Semiconductors product is deemed to offer functions and qualities beyond those described in the Product data sheet.

26.3 Disclaimers

Limited warranty and liability — Information in this document is believed to be accurate and reliable. However, NXP Semiconductors does not give any representations or warranties, expressed or implied, as to the accuracy or completeness of such information and shall have no liability for the consequences of use of such information. NXP Semiconductors takes no responsibility for the content in this document if provided by an information source outside of NXP Semiconductors. In no event shall NXP Semiconductors be liable for any indirect, incidental, punitive, special or consequential damages (including - without limitation - lost profits, lost savings, business interruption, costs related to the removal or replacement of any products or rework charges) whether or not such damages are based on tort (including negligence), warranty, breach of contract or any other legal theory. Notwithstanding any damages that customer might incur for any reason whatsoever, NXP Semiconductors' aggregate and cumulative liability towards customer for the products described herein shall be limited in accordance with the Terms and conditions of commercial sale of NXP Semiconductors.

Right to make changes — NXP Semiconductors reserves the right to make changes to information published in this document, including without limitation specifications and product descriptions, at any time and without notice. This document supersedes and replaces all information supplied prior to the publication hereof.

Applications — Applications that are described herein for any of these products are for illustrative purposes only. NXP Semiconductors makes no representation or warranty that such applications will be suitable for the specified use without further testing or modification. Customers are responsible for the design and operation of their applications and products using NXP Semiconductors products, and NXP Semiconductors accepts no liability for any assistance with applications or customer product design. It is customer's sole responsibility to determine whether the NXP Semiconductors product is suitable and fit for the customer's applications and products planned, as well as for the planned application and use of customer's third party customer(s). Customers should provide appropriate design and operating safeguards to minimize the risks associated with their applications and products. NXP Semiconductors does not accept any liability related to any default, damage, costs or problem which is based on any weakness or default in the customer's applications or products, or the application or use by customer's third party customer(s). Customer is responsible for doing all necessary testing for the customer's applications and products using NXP Semiconductors products in order to avoid a default of the applications and the products or of the application or use by customer's third party customer(s). NXP does not accept any liability in this respect.

Limiting values — Stress above one or more limiting values (as defined in the Absolute Maximum Ratings System of IEC 60134) will cause permanent damage to the device. Limiting values are stress ratings only and (proper) operation of the device at these or any other conditions above those given in the Recommended operating conditions section (if present) or the Characteristics sections of this document is not warranted. Constant or repeated exposure to limiting values will permanently and irreversibly affect the quality and reliability of the device.

Terms and conditions of commercial sale — NXP Semiconductors products are sold subject to the general terms and conditions of commercial sale, as published at http://www.nxp.com/profile/terms, unless otherwise agreed in a valid written individual agreement. In case an individual agreement is concluded only the terms and conditions of the respective agreement shall apply. NXP Semiconductors hereby expressly objects to applying the customer's general terms and conditions with regard to the purchase of NXP Semiconductors products by customer.

No offer to sell or license — Nothing in this document may be interpreted or construed as an offer to sell products that is open for acceptance or the grant, conveyance or implication of any license under any copyrights, patents or other industrial or intellectual property rights.

Suitability for use in automotive applications — This NXP product has been qualified for use in automotive applications. If this product is used by customer in the development of, or for incorporation into, products or services (a) used in safety critical applications or (b) in which failure could lead to death, personal injury, or severe physical or environmental damage (such products and services hereinafter referred to as "Critical Applications"),

All information provided in this document is subject to legal disclaimers.

© NXP B.V. 2021. All rights reserved.

then customer makes the ultimate design decisions regarding its products and is solely responsible for compliance with all legal, regulatory, safety, and security related requirements concerning its products, regardless of any information or support that may be provided by NXP. As such, customer assumes all risk related to use of any products in Critical Applications and NXP and its suppliers shall not be liable for any such use by customer. Accordingly, customer will indemnify and hold NXP harmless from any claims, liabilities, damages and associated costs and expenses (including attorneys' fees) that NXP may incur related to customer's incorporation of any product in a Critical Application.

Export control — This document as well as the item(s) described herein may be subject to export control regulations. Export might require a prior authorization from competent authorities.

Translations — A non-English (translated) version of a document is for reference only. The English version shall prevail in case of any discrepancy between the translated and English versions.

26.4 Trademarks

Notice: All referenced brands, product names, service names and trademarks are the property of their respective owners.

I²C-bus — logo is a trademark of NXP B.V.

NXP — wordmark and logo are trademarks of NXP B.V.

All information provided in this document is subject to legal disclaimers.

© NXP B.V. 2021. All rights reserved.

Tables

Tab. 1. Ordering Information 2
Tab. 2. Ordering options 2
Tab. 3. Pin description of PCA8553DTT (TSSOP56) 4
Tab. 4. Registers of the PCA8553 5
Tab. 5. Device_ctrl - device control command register (address 01h) bit description 7
Tab. 6. Display_ctrl_1 - display control command 1 register (address 02h) bit description 8
Tab. 7. Display_ctrl_2 - display control command 2 register (address 03h) bit description 8
Tab. 8. Software_reset - software reset command register (address 00h) bit description 11
Tab. 9. Register to segment and backplane mapping 11
Tab. 10. Selection of possible display configurations 14
Tab. 11. Biasing characteristics 16
Tab. 12. I2C target address byte 28
Tab. 13. R/W-bit description 28
Tab. 14. Serial interface 28
Tab. 15. Address byte definition 29
Tab. 16. Limiting values 31
Tab. 17. Electrical characteristics 32
Tab. 18. Frequency characteristics 35
Tab. 19. I2C-bus characteristics 36
Tab. 20. SPI-bus characteristics 37
Tab. 21. SnPb eutectic process (from J-STD-020D) 42
Tab. 22. Lead-free process (from J-STD-020D) 42
Tab. 23. Selection of LCD segment drivers 45
Tab. 24. Abbreviations 47
Tab. 25. Revision history 48

Figures

Fig. 1. Block diagram of PCA8553 3
Fig. 2. Pin configuration of PCA8553DTT (TSSOP56) 4
Fig. 3. Address counter incrementing 6
Fig. 4. Reset pulse timing 10
Fig. 5. Display RAM organization bitmap for MUX 1:4 13
Fig. 6. Example of displays suitable for PCA8553 14
Fig. 7. Typical system configuration using I2C-bus, internal power-on reset enabled 15
Fig. 8. Typical system configuration using SPI-bus, internal power-on reset disabled 15
Fig. 9. Electro-optical characteristic: relative transmission curve of the liquid 18
Fig. 10. Static drive mode waveforms 19
Fig. 11. Waveforms for the 1:2 multiplex drive mode with 1⁄2 bias 20
Fig. 12. Waveforms for the 1:2 multiplex drive mode with 1⁄3 bias 21
Fig. 13. Waveforms for the 1:3 multiplex drive mode with 1⁄3 bias 22
Fig. 14. Waveforms for the 1:4 multiplex drive mode with 1⁄3 bias 23
Fig. 15. Recommended power-up and power-off sequence 25
Fig. 16. I2C read and write protocol 25
Fig. 17. I2C read and write signaling 26
Fig. 18. Data transfer overview 28
Fig. 19. SPI-bus write example: writing two data bytes to registers 00h and 01h 29
Fig. 20. SPI-bus read example: reading two data bytes from registers 04h and 05h 30
Fig. 21. Device protection diagram 30
Fig. 22. Typical IDD and IDD(LCD) in power-down mode as function of temperature 33
Fig. 23. Typical IDD(LCD) as function of display load 34
Fig. 24. Typical IDD(LCD) as function of ffr 35
Fig. 25. Relation of frame frequency (ffr), clock frequency (fclk) and multiplex-rate (nMUX) 36
Fig. 26. I2C-bus timing waveforms 37
Fig. 27. SPI-bus timing waveforms 38
Fig. 28. Package outline SOT364-1 (TSSOP56) of PCA8553DTT 40
Fig. 29. Temperature profiles for large and small components 43
Fig. 30. Footprint information for reflow soldering of SOT364-1 (TSSOP56) of PCA8553DTT 44

All information provided in this document is subject to legal disclaimers.

© NXP B.V. 2021. All rights reserved.

Contents

1 General description 1
2 Features and benefits 1
3 Applications 1
4 Ordering information 2
4.1 Ordering options 2
5 Block diagram 3
6 Pinning information 4
6.1 Pinning 4
6.2 Pin description 4
7 Functional description 5
7.1 Registers of the PCA8553 5
7.2 Command registers of the PCA8553 7
7.2.1 Command: Device_ctrl 7
7.2.1.1 Internal oscillator and clock output 7
7.2.2 Command: Display_ctrl_1 8
7.2.2.1 Enhanced power drive mode 8
7.2.2.2 Multiplex drive mode 8
7.2.3 Command: Display_ctrl_2 8
7.2.3.1 Blinking 9
7.2.3.2 Line inversion (driving scheme A) and frame inversion (driving scheme B) 9
7.3 Starting and resetting the PCA8553 9
7.3.1 Power-down mode 10
7.3.2 Power-On Reset (POR) 10
7.3.3 Hardware reset: RST pin 10
7.3.4 Command: Software_reset 11
7.4 Display data register mapping 11
8 Possible display configurations 14
8.1 LCD bias generator 15
8.2 LCD voltage selector 16
8.2.1 Electro-optical performance 17
8.2.2 LCD drive mode waveforms 18
8.2.2.1 Static drive mode 18
8.2.2.2 1:2 Multiplex drive mode 19
8.2.2.3 1:3 Multiplex drive mode 21
8.2.2.4 1:4 Multiplex drive mode 22
8.3 Backplane and segment outputs 23
8.3.1 Backplane outputs 24
8.3.2 Segment outputs 24
9 Power Sequencing 24
9.1 Power-on 24
9.2 Power-off 24
9.3 Power sequences 24
10 Bus interfaces 25
10.1 I2C-bus interface 25
10.1.1 Bit transfer 26
10.1.2 START and STOP conditions 26
10.1.3 Acknowledge 26
10.1.4 I2C interface protocol 27
10.1.4.1 Write protocol 27
10.1.4.2 Read protocol 27
10.1.4.3 I2C-bus target address 27
10.2 SPI-bus interface 28
10.2.1 Data transmission 28
10.2.1.1 Write protocol 29
10.2.1.2 Read protocol 29
10.3 EMC detection 30
11 Internal circuitry 30
12 Safety notes 31
13 Limiting values 31
14 Characteristics 32
15 Application information 39
15.1 Power-on Reset 39
15.2 I2C acknowledge after power-on 39
15.3 Resistors on I/O pins 39
16 Test information 39
16.1 Quality information 39
17 Package outline 40
18 Handling information 41
19 Packing information 41
19.1 Tape and reel information 41
20 Soldering of SMD packages 41
20.1 Introduction to soldering .....
20.2 Wave and reflow soldering .....
20.3 Wave soldering .....
20.4 Reflow soldering .....
21 Footprint information 44
22 Appendix 45
22.1 LCD segment driver selection 45
23 Abbreviations 47
24 References 47
25 Revision history 48
26 Legal information 49

Please be aware that important notices concerning this document and the product(s) described herein, have been included in section 'Legal information'.

© NXP B.V. 2021. **All rights reserved.**

For more information, please visit: http://www.nxp.com
For sales office addresses, please send an email to: salesaddresses@nxp.com

Date of release: 1 October 2021
Document identifier: PCA8553