Subminiature PCB Telecom Relay — PC322

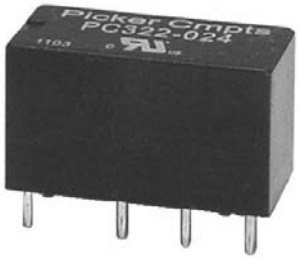

FEATURES

- Subminiature design
- DIL Package for PC board or socket
- Contact capacity from 1 mA to 1.25 A
- Meets FCC part 68 voltage surge
- Class "B" insulation standard
- Three coil sensitivities available
- Sealed, immersion cleanable

c UL us File # E86876

UL/CSA RATINGS

Contact Form	2 Form C DPDT (crossbar contacts)
Switching Current Range	1 mA to 1.25 A
Switching Voltage Range	10 mVAC - 125VAC; 10 mVDC - 150 VDC
Max. Continuous Current	2 Amps
Switching Power Range	10 micro W to 30 W / 50 VA

CONTACT DATA

Material		AgNi + Au (Silver Nickle + Gold Plate) AgPd + Au (Silver Palladium + Gold Plate)
Initial Contact Resistance		50 mOhm max @ 1mA, 20mV, 1KHz, meets DIN 4160 part 4
Service Life	Mechanical	2 X 10^7 Operations
	Electrical	2 X 10^6 Operations

COIL DATA

Type	Coil Voltage	Resistance Ohms	Must Operate Voltage Max. (VDC)	Allowable Operating Voltage Range	Hold Voltage	Must Release Voltage
Standard .515 W to .560 W	4.5	36 ± 2.9	3.4	3.4 - 7.0	1.125	0.225
	5	45 ± 3.6	3.8	3.8 -7.8	1.25	0.25
	6	70 ± 5.6	4.5	4.5 - 9.7	1.5	0.3
	12	280 ± 22	9.0	9.0 - 19.4	3	0.6
	24	1070 ± 107	18.0	18.0 - 37.6	6	1.2
	48	4300 ± 430	36.0	36.0 - 74.2	12	2.4
H Sensitive 0.2 W	5	125 ± 7	3.8	3.8 - 12.5	1.25	0.4
	6	180 ± 10	4.5	4.5 - 15.0	1.5	0.48
	9	405 ± 41	6.8	6.8 - 27.5	6.75	0.72
	12	720 ± 72	9.0	9.0 - 30	9	0.96
	24	2880 ± 288	18.0	18.0 - 60	18	1.92
	48	11520 ± 1152	36.0	36.0 - 121.4	38	3.84
L Sensitive 0.15 W	4.5	135 ± 11	3.4	3.4 - 13.5	1.125	0.36
	5	167 ± 13	3.8	3.8 - 15	1.25	0.4
	6	240 ± 19	4.5	4.5 - 18	1.5	0.48
	12	960 ± 96	9.0	9.0 - 35.6	3	0.96
	24	3840 ± 384	18.0	18.0 - 70.1	6	1.92
	48	15360 ± 1536	36.0	36.0 - 140	12	3.84

Note: Custom coil voltages within the ranges shown are available on special order.

ORDERING INFORMATION

Example:	PC322	-12	P	H

Model

Coil Voltage

Contact Material

Nil: AgNi + Au; P: AgPd + Au

Sensitivity

Nil: Standard .515 to .560 W; H: 0.2 W; L: 0.15 W

3220 Commander Drive, Suite 102, Carrollton, Texas 75006
Sales: Call Toll Free (888)997-3933 Fax (818) 342-5296 email: pickerwest@sbcglobal.net URL: pickercomponents.com

CHARACTERISTICS

Type	Standard	Sensitive H & L
Operate Time	7.5 ms. max.	7.5 ms. max.
Operate Bounce	1 ms. typical	0.5 ms. typical
Release Time	3 ms. max.	5 ms. max.
Release Bounce	2.5 ms. typical	3 ms. typical
Insulation Resistance	1000 Mmegohms min. at 500 VDC, 50% RH	
Dielectric Strength	1000 V rms, 1 min. between coil and contacts and between adjacent parts 500 V rms, 1 min. between open contacts	
Surge Strength	1500 V, between coil and contacts (FCC Part 68)	
Capacitance	2 pf max. between contacts; 0.5 pf max. between adjacent poles; 5 pf max. between coil and contacts	
Shock Resistance	50 g, 11 ms.	
Vibration Resistance	10 g, 10 - 70 Hz	
Allowable Max. Power Consumption at 20 C	1.02 W	
Ambient Temperature	-25 degrees C to 75 degrees C	-25 degrees C to 85 degrees C
Power Consumption	0.515 to 0.56 W	0.15 to 0.36 W
Weight	5 grams approx.	

Dimensions in Inches (millimeters)
Drawings are 2X actual size

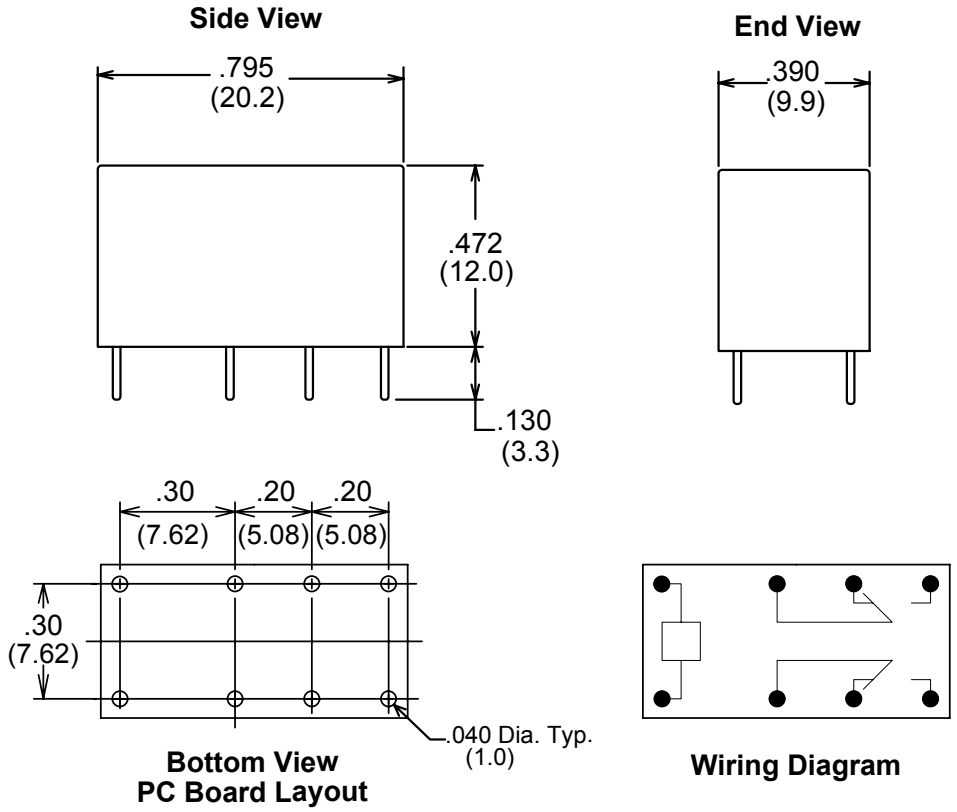

Notes:

Tolerances ± .010 unless otherwise noted

3220 Commander Drive, Suite 102, Carrollton, Texas 75006

Sales: Call Toll Free (888) 997-3933 Fax (818) 342-5296 email: pickerwest@sbcglobal.net URL: pickercomponents.com