Microminiature 1 Amp Signal Relay — PC302

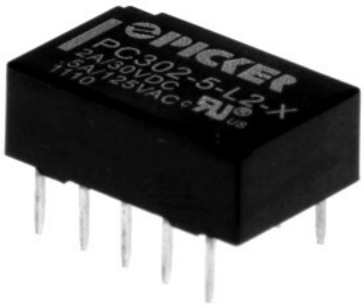

c UL us E86876

FEATURES

- Microminiature Design
- DIL Package for PC Board or Socket
- Low 5mm Profile
- Meets FCC Part 68 Voltage Surge
- Bifurcated Contacts for High Sensitivity
- Single and Dual Latching Coil Available
- Sealed, Immersion Cleanable
- RoHS Compliant:

Rated Load	2 Form C DPDT(B-M) (Crossbar Contacts)
Resistive	2 A 30 VDC
Resistive	0.5 A 125 VDC
Max. Switching Power	60 W 62.5 VA
Max. Switching Voltage	220 VDC 250 VAC
Max, Switching Current	2 A
Min. Switching Load	.01 mA 10 mV

CONTACT DATA

Material	Stationary	CuNi Base, AgPd+Au (Clad) Top
	Moveable	CuNi Base AgPd Top
Initial Contact Resistance		50 mΩ max
Service Life	Mechanical	1 X 10^8 Operations
	Electrical	1 X 10^5 Operations 0.5 A 125 VAC 2 X 10^5 1A 30VDC

CHARACTERISTIC

Operate Time	2.0 ms.
Release Time	1.0 ms
Insulation Resistance	1,000 MΩ min, at 500 VDC
Dielectric Strength	1,000 VAC, 1 min, Between Open Contacts 1,000 VAC, 1 min, Between Coil and Contacts 1,000 VAC, 1 min, Between Contact Poles
Surge Withstand Voltage FCC Part.68	1,500 V, Between Open Contacts 1,500 V, Between Coil and Contacts 2,500 V, Between Contacts Poles
Power Consumption	100 mW, 140 mW, 150 mW, 200 mW, 300 mW

CHARACTERISTIC Continued

Shock Resistance	Functional	500 m/s² 11 ms
	Survival	1,000 m/s² 11 ms
Vibration Resistance	Functional	10 Hz - 70 Hz Double Amplitude 3 mm
	Survival	10 Hz - 70 Hz Double Amplitude 5 mm
Terminal Strength	5N	
Solderability	235 °C ± 2°C 3 s ± 0.5 s	
Temperature. Range	- 40°C ~ 70°C (-40° F ~ 158° F)	
Weight	1.5 Grams	

ORDERING INFOMATION

Example:	PC302	-12	-L1	-X

Model: **PC302**

Coil Voltage: **3, 5, 6, 9, 12, 24**

Type of Operation: **Nil**: Single Side Stable;
L1: Single Coil Latching;
L2: Dual Coil Latching

RoHS Compliant: -X

Box Quantity: 4,000; Inner Box: 1,000

3220 Commander Drive, Suite 102 Carrollton, TX 75006
Sales: (972) 713-6272 (888) 997-3933 Fax: (972)735-0964
www.PickerComponents.com
e-mail: sales@pickercomponents.com

Dimensions are listed for reference purposes only.
Specifications and Availability subject to change without notice.

COIL DATA

Type	Coil Voltage (VDC)		Coil Resistance (Ohms ± 10 %)	Must Operate Voltage Max. (VDC)	Must Release Voltage Min. (VDC)	Coil Power (W)
	Rated	Max.				
Single Sided Stable (140 mW)	3	7.5	64.3	2.25	0.3	0.14
	4.5	11.25	144.6	3.38	0.45	0.14
	5	12.5	178	3.75	0.5	0.14
	6	15.0	257	4.50	0.6	0.14
	9	22.5	579	6.75	0.9	0.14
	12	30.0	1028	9.00	1.2	0.14
	24	48.0	2880	18.0	2.4	0.20
Single Coil Latching (100 mW)	3	8.7	90	2.25	2.25#	0.10
	4.5	13.0	202.5	3.38	3.38#	0.10
	5	14.5	250	3.75	3.75#	0.10
	6	17.4	360	4.50	4.50#	0.10
	9	26.1	810	6.75	6.75#	0.10
	12	34.8	1440	9.00	9.00#	0.10
	24	57.6	3840	18.0	18.0#	0.15
Dual Coil Latching (200 mW)	3	6	45*	2.25	2.25#	0.20
	4.5	9	101*	3.38	3.38#	0.20
	5	10	125*	3.75	3.75#	0.20
	6	12	180*	4.50	4.50#	0.20
	9	18	405*	6.75	6.75#	0.20
	12	24	720*	9.00	9.00#	0.20
	24	36	1920*	18.0	18.0#	0.30

*Set Coil Value and Reset Coil Value; #Reset (Max) Value

DIMENSIONS in Inches (mm)

Relay

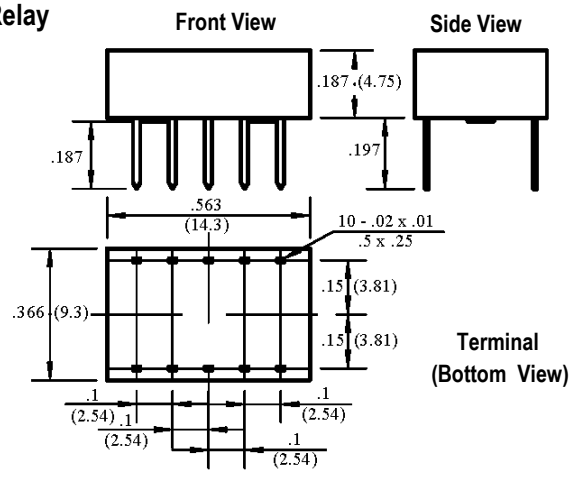

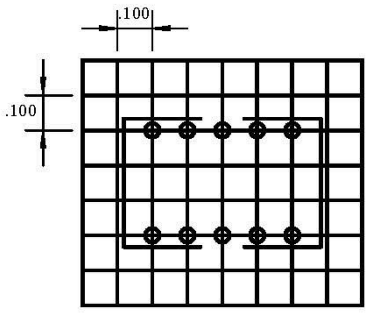

PCB Mounting
(Top View)

Single Side Stable

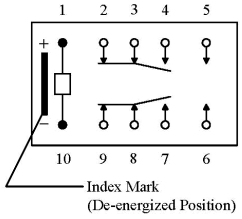

Single Coil Latching

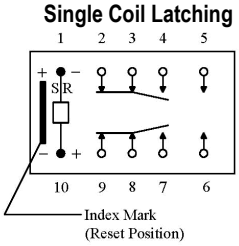

Dual Coil Latching

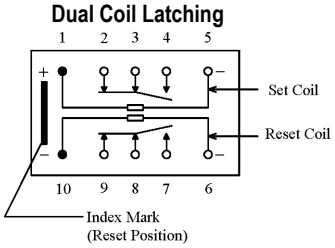

Wiring Diagrams
(Bottom View)

3220 Commander Drive, Suite 102 Carrollton, TX 75006
Sales: (972) 713-6272 (888) 997-3933 Fax: (972)735-0964
www.PickerComponents.com
e-mail: sales@pickercomponents.com

Dimensions are listed for reference purposes only.

Specifications and Availability subject to change without notice.