COSEL AC-DC Power Supplies Enclosed type

PBW15F

Ordering information

PB	W	15	F	-□	-□
①	②	③	④	⑤	⑧

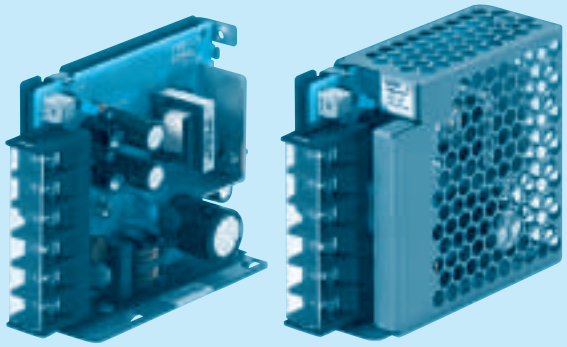

Cover is optional

Recommended EMI/EMC Filter NAC-06-472

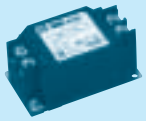

High voltage pulse noise type : NAP series
Low leakage current type : NAM series
*The EMI/EMC Filter is recommended to connect with several devices.

①Series name
②Dual output
③Output wattage
④Universal input
⑤Output voltage
⑥Optional *10
C :with Coating
G :Low leakage current
E :Low leakage current and EMI class A
T :Vertical terminal block
J :Connector type
N :with Cover
N1 :with DIN rail
V :Output voltage setting potentiometer externally

MODEL		PBW15F-12	PBW15F-15
MAX OUTPUT WATTAGE[W]	*5	16.8	15.0
DC OUTPUT	VOLTAGE[V] *6	±12 (+24)	±15 (+30)
	CURRENT1[A]	0.7	0.5
	CURRENT2[A] *5	1.4	1.0

SPECIFICATIONS

	MODEL		PBW15F-12		PBW15F-15	
INPUT	VOLTAGE[V]		AC85 - 264 1φ or DC110 - 370 (AC50 or DC70 Please refer to the instruction manual 2.1 Input voltage *8)			
	CURRENT[A]	ACIN 100V	0.40typ (CURRENT1)			
		ACIN 200V	0.20typ (CURRENT1)			
	FREQUENCY[Hz]		50/60 (47 - 440) or DC			
	EFFICIENCY[%]	ACIN 100V	74typ (CURRENT1)		78typ (CURRENT1)	
		ACIN 200V	77typ (CURRENT1)		80typ (CURRENT1)	
	INRUSH CURRENT[A]	ACIN 100V	15typ (CURRENT1) (At cold start)			
		ACIN 200V	30typ (CURRENT1) (At cold start)			
	LEAKAGE CURRENT[mA]		0.15/0.30max (ACIN 100V/240V 60Hz, Io=100%, According to IEC60950-1,DENAN)			
OUTPUT	VOLTAGE[V]		±12	/ (+24V reference number)	±15	/ (+30V reference number)
	CURRENT1[A]		0.7	/ 0.7	0.5	/ 0.5
	CURRENT2[A] *5		1.4	/ -	1.0	/ -
	LINE REGULATION[mV] *9 *11		60max	/ 96max	60max	/ 96max
	LOAD REGULATION 1[mV] *3 *11		600max	/ 150max	600max	/ 150max
	LOAD REGULATION 2[mV] *4 *11		750max	/ -	750max	/ -
	RIPPLE[mVp-p]	0 to +50℃ *1	120max	/ 240max	120max	/ 240max
		-10 - 0℃ *1	160max	/ 320max	160max	/ 320max
	RIPPLE NOISE[mVp-p]	0 to +50℃ *1	150max	/ 300max	150max	/ 300max
		-10 - 0℃ *1	180max	/ 360max	180max	/ 360max
	TEMPERATURE REGULATION[mV]	0 to +50℃	120max		150max	
		-10 to +50℃	150max		180max	
	DRIFT[mV] *2		48max		60max	
	START-UP TIME[ms]		200typ(ACIN 100V, Io=100%) *Start-up time is 700ms typ for less than 1minute of applying input again from turning off the input voltage.			
	HOLD-UP TIME[ms]		20typ (ACIN 100V, Io=100%)			
	OUTPUT VOLTAGE ADJUSTMENT RANGE[V]		9.60 - 13.2 (+V and -V are simultaneously adjusted)		13.2 - 16.5 (+V and -V are simultaneously adjusted)	
	OUTPUT VOLTAGE SETTING[V]		11.5 - 12.5 (+V and -V CURRENT1)		14.4 - 15.6 (+V and -V CURRENT1)	
PROTECTION CIRCUIT AND OTHERS	OVERCURRENT PROTECTION		Works over 105% of rated current and recovers automatically			
	OVERVOLTAGE PROTECTION[V]		16.8 - 24.0		20.0 - 29.0	
	OPERATING INDICATION		LED (Green)			
	REMOTE ON/OFF		None			
ISOLATION	INPUT-OUTPUT		AC3,000V 1minute, Cutoff current = 10mA, DC500V 50MΩ min (At Room Temperature)			
	INPUT-FG		AC2,000V 1minute, Cutoff current = 10mA, DC500V 50MΩ min (At Room Temperature)			
	OUTPUT-FG		AC500V 1minute, Cutoff current = 25mA, DC500V 50MΩ min (At Room Temperature)			
ENVIRONMENT	OPERATING TEMP.,HUMID.AND ALTITUDE		-10 to +71℃ (Required Derating), 20 - 90%RH (Non condensing) 3,000m (10,000feet) max			
	STORAGE TEMP.,HUMID.AND ALTITUDE		-20 to +75℃, 20 - 90%RH (Non condensing) 9,000m (30,000feet) max			
	VIBRATION		10 - 55Hz, 19.6m/s² (2G), 3minutes period, 60minutes each along X, Y and Z axis			
	IMPACT		196.1m/s² (20G), 11ms, once each X, Y and Z axis			
SAFETY AND NOISE REGULATIONS	AGENCY APPROVALS (At only AC input)		UL60950-1, C-UL(CSA60950-1), EN60950-1, EN50178 Complies with DEN-AN			
	CONDUCTED NOISE		Complies with FCC Part15 classB, VCCI-B, CISPR22-B, EN55011-B, EN55022-B			
	HARMONIC ATTENUATOR		Complies with IEC61000-3-2 (Not built-in to active filter *7) *12			
OTHERS	CASE SIZE/WEIGHT		31×78×85mm [1.22×3.07×3.35 inches] (without terminal block) (W×H×D) / 200g max (without cover)			
	COOLING METHOD		Convection			

*1 Measured by 20MHz oscilloscope or Ripple-Noise meter(equivalent to KEISOKU-GIKEN : RM101).
*2 Drift is the change in DC output for an eight hour period after a half-hour warm-up at 25℃.
*3 Figures for 0 to rated current 1.The current not measured side is fixed.
*4 Figures for 0 to rated current 2.The current not measured side is fixed.
*5 The sum of +power -power must be less than output power.
*6 ±12,±15 can be used as +24 and +30.
*7 When two or more units are used,they may not comply with the harmonic attenuator. Please contact us for details.
*8 Derating is required.
*9 Figures to rated current 1.
*10 Please contact us about safety approvals for the model with option.
*11 Please contact us about dynamic load and input response.
*12 Please contact us about class C.
* Parallel operation with other model is not possible.
* Derating is required when operated with cover.
* A sound may occur from power supply at peak loading.

Block diagram

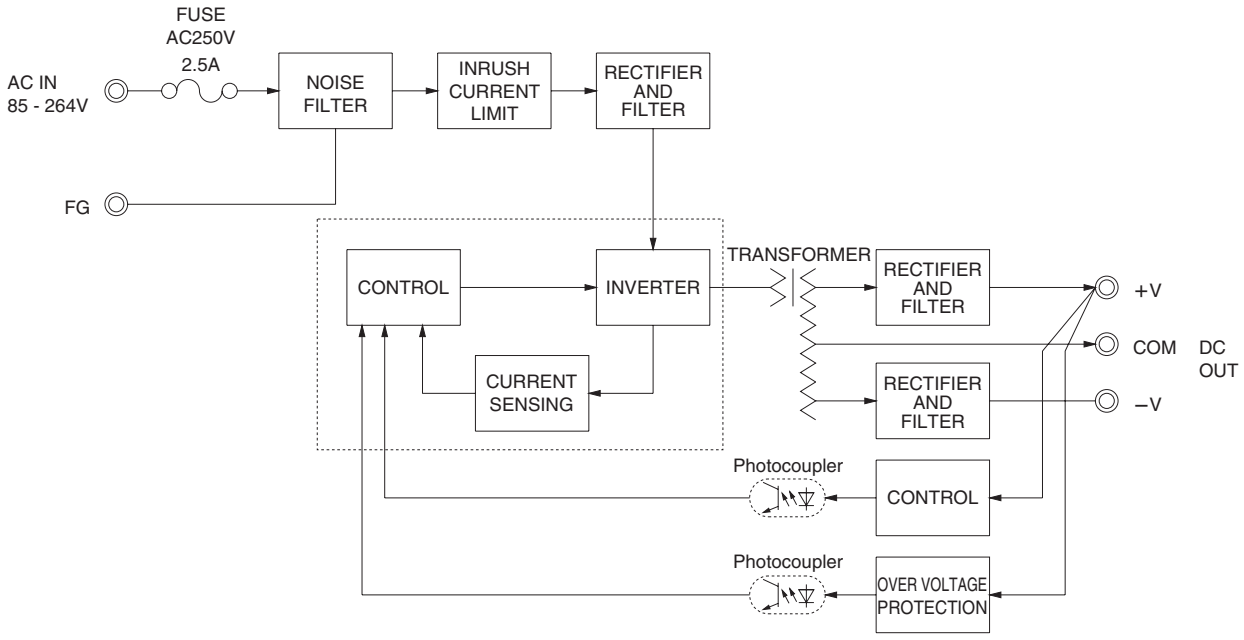

External view

※ External size of option T,J,N,N1 and V is different from standard model and refer to 7 Option of instruction manual for details.

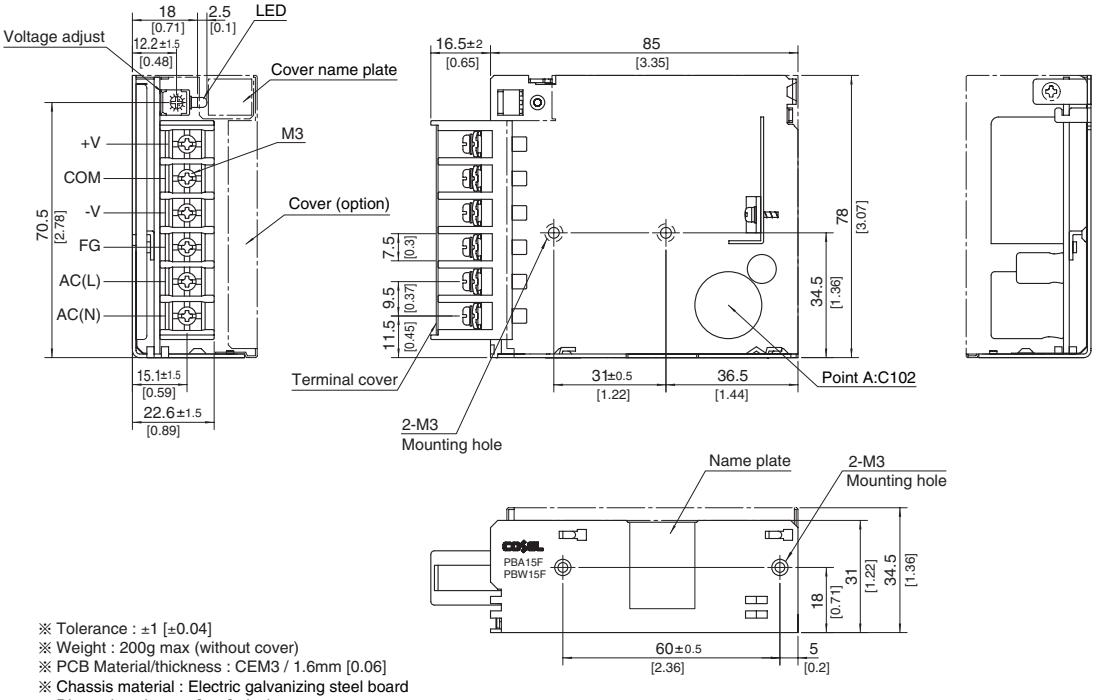

※ Tolerance : ±1 [±0.04]
※ Weight : 200g max (without cover)
※ PCB Material/thickness : CEM3 / 1.6mm [0.06]
※ Chassis material : Electric galvanizing steel board
※ Dimensions in mm, [ ]= inches
※ Mounting torque : 0.6N • m(6.3kgf • cm)max
※ Screw tightening torque : M3 0.8N • m(8.5kgf • cm)max
※ Please connect safety ground to the unit in 2-M3 holes.

COSEL AC-DC Power Supplies Enclosed type

PBW30F

Ordering information

PB	W	30	F	-□	-□
①	②	③	④	⑤	⑧

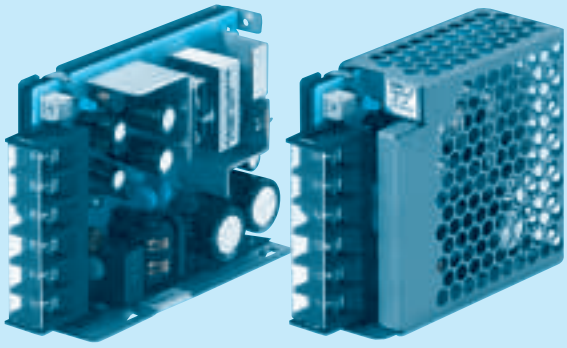

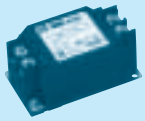

Recommended EMI/EMC Filter
NAC-06-472

High voltage pulse noise type : NAP series
Low leakage current type : NAM series
＊The EMI/EMC Filter is recommended to connect with several devices.

Cover is optional

①Series name
②Dual output
③Output wattage
④Universal input
⑤Output voltage
⑥Optional ＊10
C :with Coating
G :Low leakage current
E :Low leakage current and EMI class A
T :Vertical terminal block
J :Connector type
N :with Cover
N1 :with DIN rail
V :Output voltage setting potentiometer externally

MODEL		PBW30F-5	PBW30F-12	PBW30F-15
MAX OUTPUT WATTAGE[W]	＊5	15	31.2	30.0
DC OUTPUT	VOLTAGE[V] ＊6	±5 (+10)	±12 (+24)	±15 (+30)
	CURRENT1[A]	1.5	1.3	1.0
	CURRENT2[A] ＊5	2.0	1.7	1.4

SPECIFICATIONS

	MODEL		PBW30F-5	PBW30F-12	PBW30F-15
INPUT	VOLTAGE[V]		AC85 - 264 1φ or DC110 - 370 (AC50 or DC70 Please refer to the instruction manual 2.1 Input voltage ＊8)		
	CURRENT[A]	ACIN 100V	0.4typ (CURRENT1)	0.7typ (CURRENT1)	
		ACIN 200V	0.25typ (CURRENT1)	0.4typ (CURRENT1)	
	FREQUENCY[Hz]		50/60 (47 - 440) or DC		
	EFFICIENCY[%]	ACIN 100V	75typ (CURRENT1)	77typ (CURRENT1)	78typ (CURRENT1)
		ACIN 200V	75typ (CURRENT1)	81typ (CURRENT1)	79typ (CURRENT1)
	INRUSH CURRENT[A]	ACIN 100V	15typ (CURRENT1) (At cold start)		
		ACIN 200V	30typ (CURRENT1) (At cold start)		
	LEAKAGE CURRENT[mA]		0.30/0.65max (ACIN 100V/240V 60Hz, Io=100%, According to IEC60950-1,DENAN)		
OUTPUT	VOLTAGE[V]		±5 / (+10V reference number)	±12 / (+24V reference number)	±15 / (+30V reference number)
	CURRENT1[A]		1.5 / 1.5	1.3 / 1.3	1.0 / 1.0
	CURRENT2[A]	＊5	2.0 / -	1.7 / -	1.4 / -
	LINE REGULATION[mV]	＊9 ＊11	20max / 36max	60max / 96max	60max / 96max
	LOAD REGULATION 1[mV]	＊3 ＊11	250max / 100max	600max / 150max	600max / 150max
	LOAD REGULATION 2[mV]	＊4 ＊11	500max / -	750max / -	750max / -
	RIPPLE[mVp-p]	0 to +50℃ ＊1	80max / 240max	120max / 240max	120max / 240max
		-10 - 0℃ ＊1	140max / 320max	160max / 320max	160max / 320max
	RIPPLE NOISE[mVp-p]	0 to +50℃ ＊1	120max / 300max	150max / 300max	150max / 300max
		-10 - 0℃ ＊1	160max / 360max	180max / 360max	180max / 360max
	TEMPERATURE REGULATION[mV]	0 to +50℃	50max	120max	150max
		-10 to +50℃	60max	150max	180max
	DRIFT[mV]	＊2	20max	48max	60max
	START-UP TIME[ms]		200typ(ACIN 100V, Io=100%) ＊Start-up time is 700ms typ for less than 1minute of applying input again from turning off the input voltage.		
	HOLD-UP TIME[ms]		20typ (ACIN 100V, Io=100%)		
	OUTPUT VOLTAGE ADJUSTMENT RANGE[V]		4.99 - 6.00 (+V and -V are simultaneously adjusted)	9.60 - 13.2 (+V and -V are simultaneously adjusted)	13.2 - 16.5 (+V and -V are simultaneously adjusted)
	OUTPUT VOLTAGE SETTING[V]		4.99 - 5.30 (+V and -V CURRENT1)	11.5 - 12.5 (+V and -V CURRENT1)	14.4 - 15.6 (+V and -V CURRENT1)
PROTECTION CIRCUIT AND OTHERS	OVERCURRENT PROTECTION		Works over 105% of rated current and recovers automatically		
	OVERVOLTAGE PROTECTION[V]		6.90 - 10.0	16.8 - 24.0	20.0 - 29.0
	OPERATING INDICATION		LED (Green)		
	REMOTE ON/OFF		None		
ISOLATION	INPUT-OUTPUT		AC3,000V 1minute, Cutoff current = 10mA, DC500V 50MΩ min (At Room Temperature)		
	INPUT-FG		AC2,000V 1minute, Cutoff current = 10mA, DC500V 50MΩ min (At Room Temperature)		
	OUTPUT-FG		AC500V 1minute, Cutoff current = 25mA, DC500V 50MΩ min (At Room Temperature)		
ENVIRONMENT	OPERATING TEMP.,HUMID.AND ALTITUDE		-10 to +71℃ (Required Derating), 20 - 90%RH (Non condensing) 3,000m (10,000feet) max		
	STORAGE TEMP.,HUMID.AND ALTITUDE		-20 to +75℃, 20 - 90%RH (Non condensing) 9,000m (30,000feet) max		
	VIBRATION		10 - 55Hz, 19.6m/s² (2G), 3minutes period, 60minutes each along X, Y and Z axis		
	IMPACT		196.1m/s² (20G), 11ms, once each X, Y and Z axis		
SAFETY AND NOISE REGULATIONS	AGENCY APPROVALS (At only AC input)		UL60950-1, C-UL(CSA60950-1), EN60950-1, EN50178 Complies with DEN-AN		
	CONDUCTED NOISE		Complies with FCC Part15 classB, VCCI-B, CISPR22-B, EN55011-B, EN55022-B		
	HARMONIC ATTENUATOR		Complies with IEC61000-3-2 (Not built-in to active filter ＊7) ＊12		
OTHERS	CASE SIZE/WEIGHT		31×78×103mm [1.22×3.07×4.06 inches] (without terminal block) (W×H×D) / 270g max (without cover)		
	COOLING METHOD		Convection		

＊1 Measured by 20MHz oscilloscope or Ripple-Noise meter(equivalent to KEISOKU-GIKEN : RM101).
＊2 Drift is the change in DC output for an eight hour period after a half-hour warm-up at 25℃.
＊3 Figures for 0 to rated current 1.The current not measured side is fixed.
＊4 Figures for 0 to rated current 2.The current not measured side is fixed.
＊5 The sum of +power -power must be less than output power.
＊6 ±5,±12,±15 can be used as +10,+24 and +30.
＊7 When two or more units are used,they may not comply with the harmonic attenuator. Please contact us for details.
＊8 Derating is required.
＊9 Figures to rated current 1.
＊10 Please contact us about safety approvals for the model with option.
＊11 Please contact us about dynamic load and input response.
＊12 Please contact us about class C.
＊ Parallel operation with other model is not possible.
＊ Derating is required when operated with cover.
＊ A sound may occur from power supply at peak loading.

Block diagram

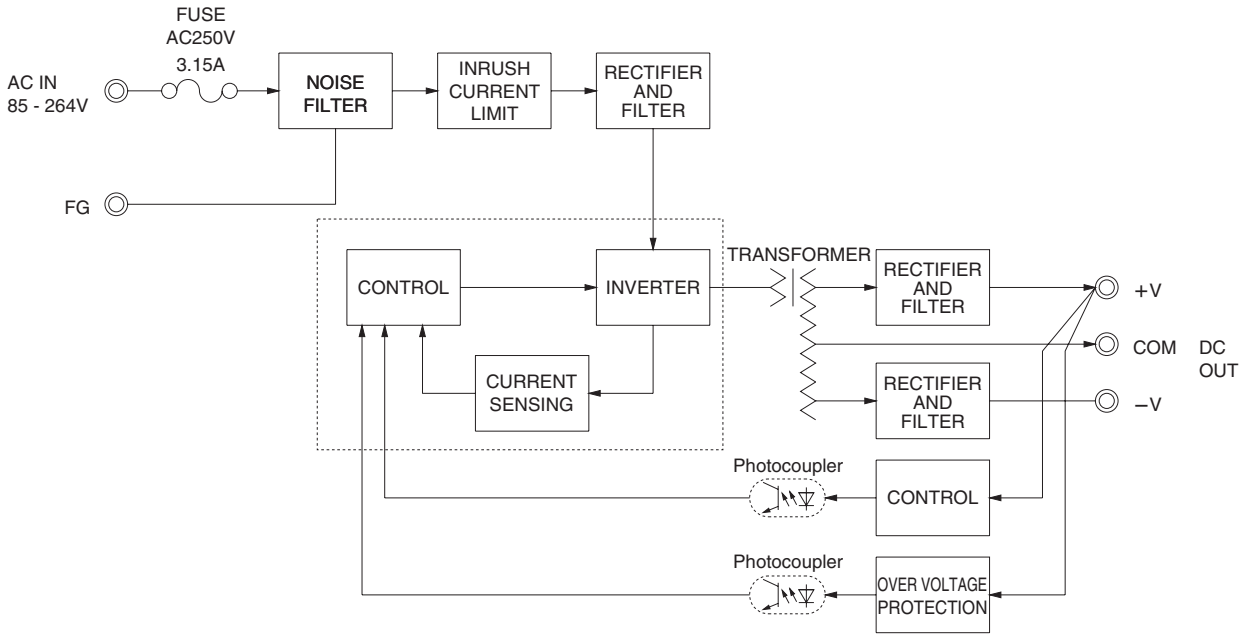

External view

※ External size of option T,J,N,N1 and V is different from standard model and refer to 7 Option of instruction manual for details.

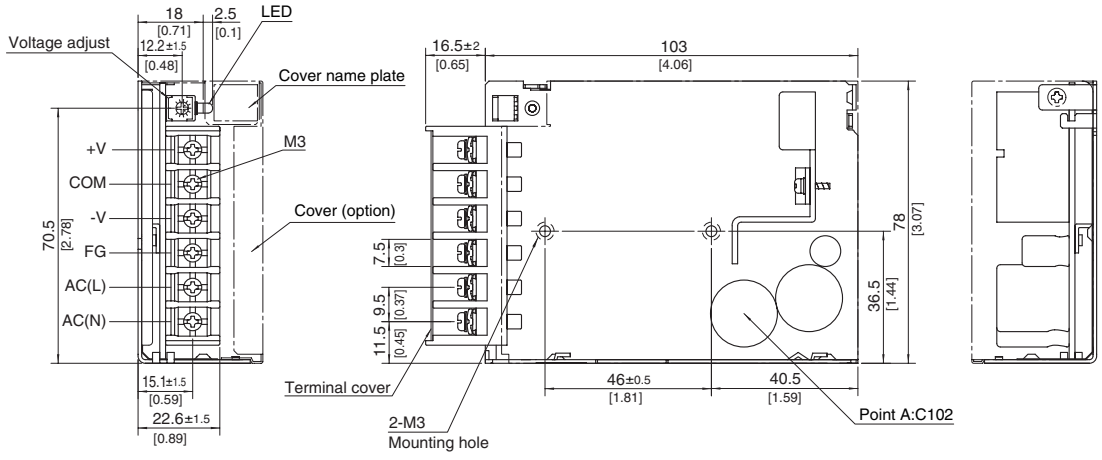

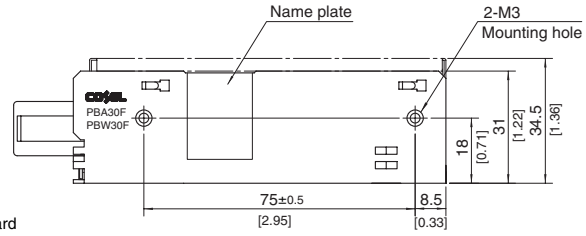

※ Tolerance : ±1 [±0.04]
※ Weight : 270g max (without cover)
※ PCB Material/thickness : CEM3 / 1.6mm [0.06]
※ Chassis material : Electric galvanizing steel board
※ Dimensions in mm, [ ]= inches
※ Mounting torque : 0.6N • m(6.3kgf • cm)max
※ Screw tightening torque : M3 0.8N • m(8.5kgf • cm)max
※ Please connect safety ground to the unit in 2-M3 holes.

COSEL AC-DC Power Supplies Enclosed type

PBW50F

Ordering information

PB	W	50	F	-□	-□
①	②	③	④	⑤	⑧

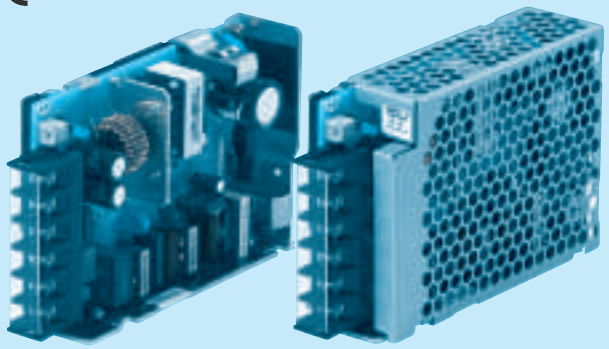

Recommended EMI/EMC Filter
NAC-06-472

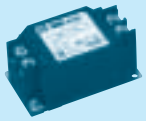

High voltage pulse noise type : NAP series
Low leakage current type : NAM series
＊The EMI/EMC Filter is recommended to connect with several devices.

Cover is optional

①Series name
②Dual output
③Output wattage
④Universal input
⑤Output voltage
⑥Optional ＊9
C :with Coating
G :Low leakage current (0.15mA max / ACIN 240V)
E :Low leakage current and EMI class A (0.5mA max / ACIN 240V)
T :Vertical terminal block
J :Connector type
R :with Remote ON/OFF
N :with Cover
N1 :with DIN rail
V :Output voltage setting potentiometer externally

MODEL		PBW50F-5	PBW50F-12	PBW50F-15
MAX OUTPUT WATTAGE[W] ＊6		30	50.4	51
DC OUTPUT	VOLTAGE[V] ＊8	±5 (+10)	±12 (+24)	±15 (+30)
	CURRENT1[A]	3.0	2.1	1.7
	CURRENT2[A] ＊6	4.0	2.7	2.4

SPECIFICATIONS

	MODEL		PBW50F-5	PBW50F-12	PBW50F-15
INPUT	VOLTAGE[V]		AC85 - 264 1φ or DC120 - 370 (AC50 or DC70 Please refer to the instruction manual 2.1 Input voltage ＊3)		
	CURRENT[A]	ACIN 100V	0.45typ (CURRENT1)	0.70typ (CURRENT1)	
		ACIN 200V	0.30typ (CURRENT1)	0.40typ (CURRENT1)	
	FREQUENCY[Hz]		50/60 (47 - 63)		
	EFFICIENCY[%]	ACIN 100V	76typ (CURRENT1)	81typ (CURRENT1)	81typ (CURRENT1)
		ACIN 200V	77typ (CURRENT1)	83typ (CURRENT1)	83typ (CURRENT1)
	POWER FACTOR(Io=100%)	ACIN 100V	0.98typ	0.99typ	
		ACIN 200V	0.87typ	0.93typ	
	INRUSH CURRENT[A]	ACIN 100V	15typ (CURRENT1) (At cold start)		
		ACIN 200V	30typ (CURRENT1) (At cold start)		
	LEAKAGE CURRENT[mA]		0.40/0.75max (ACIN 100V/240V 60Hz, Io=100%, According to IEC60950-1,DENAN)		
OUTPUT	VOLTAGE[V]		±5 / (+10V reference number)	±12 / (+24V reference number)	±15 / (+30V reference number)
	CURRENT1[A]		3.0 / 3.0	2.1 / 2.1	1.7 / 1.7
	CURRENT2[A] ＊6		4.0 / -	2.7 / -	2.4 / -
	LINE REGULATION[mV]		20max / 36max	48max / 96max	60max / 96max
	LOAD REGULATION 1[mV] ＊4		250max / 100max	600max / 150max	600max / 150max
	LOAD REGULATION 2[mV] ＊5		500max / -	750max / -	750max / -
	RIPPLE[mVp-p]	0 to +50℃ ＊1	80max / 240max	120max / 240max	120max / 240max
		-10 - 0℃ ＊1	140max / 320max	160max / 320max	160max / 320max
	RIPPLE NOISE[mVp-p]	0 to +50℃ ＊1	120max / 300max	150max / 300max	150max / 300max
		-10 - 0℃ ＊1	160max / 360max	180max / 360max	180max / 360max
	TEMPERATURE REGULATION[mV]	0 to +50℃	50max	120max	150max
		-10 to +50℃	60max	150max	180max
	DRIFT[mV] ＊2		20max	48max	60max
	START-UP TIME[ms]		350typ(ACIN 100V, Io=100%)		
	HOLD-UP TIME[ms]		20typ (ACIN 100V, Io=100%)		
	OUTPUT VOLTAGE ADJUSTMENT RANGE[V]		4.99 - 6.00 (+V and -V are simultaneously adjusted)	9.60 - 13.2 (+V and -V are simultaneously adjusted)	13.2 - 16.5 (+V and -V are simultaneously adjusted)
	OUTPUT VOLTAGE SETTING[V]		4.99 - 5.30 (+V and -V CURRENT1)	11.5 - 12.5 (+V and -V CURRENT1)	14.4 - 15.6 (+V and -V CURRENT1)
PROTECTION CIRCUIT AND OTHERS	OVERCURRENT PROTECTION		Works over 105% of rated current and recovers automatically		
	OVERVOLTAGE PROTECTION[V]		6.90 - 10.0	16.8 - 24.0	20.0 - 29.0
	OPERATING INDICATION		LED (Green)		
	REMOTE ON/OFF		Optional (Required external power source)		
ISOLATION	INPUT-OUTPUT · RC ＊7		AC3,000V 1minute, Cutoff current = 10mA, DC500V 50MΩ min (At Room Temperature)		
	INPUT-FG		AC2,000V 1minute, Cutoff current = 10mA, DC500V 50MΩ min (At Room Temperature)		
	OUTPUT · RC-FG ＊7		AC500V 1minute, Cutoff current = 100mA, DC500V 50MΩ min (At Room Temperature)		
ENVIRONMENT	OPERATING TEMP.,HUMID.AND ALTITUDE		-10 to +71℃ (Required Derating), 20 - 90%RH (Non condensing) 3,000m (10,000feet) max		
	STORAGE TEMP.,HUMID.AND ALTITUDE		-20 to +75℃, 20 - 90%RH (Non condensing) 9,000m (30,000feet) max		
	VIBRATION		10 - 55Hz, 19.6m/s² (2G), 3minutes period, 60minutes each along X, Y and Z axis		
	IMPACT		196.1m/s² (20G), 11ms, once each X, Y and Z axis		
SAFETY AND NOISE REGULATIONS	AGENCY APPROVALS (At only AC input)		UL60950-1, C-UL(CSA60950-1), EN60950-1, EN50178 Complies with DEN-AN		
	CONDUCTED NOISE		Complies with FCC Part15 classB, VCCI-B, CISPR22-B, EN55011-B, EN55022-B		
	HARMONIC ATTENUATOR		Complies with IEC61000-3-2 ＊10		
OTHERS	CASE SIZE/WEIGHT		31×82×120mm [1.22×3.23×4.72 inches] (without terminal block) (W×H×D) / 280g max (without cover)		
	COOLING METHOD		Convection		

＊1 Measured by 20MHz oscilloscope or Ripple-Noise meter(equivalent to KEISOKU-GIKEN : RM101).
＊2 Drift is the change in DC output for an eight hour period after a half-hour warm-up at 25℃.
＊3 Derating is required.
＊4 Figures for 0 to rated current 1.The current not measured side is fixed.
＊5 Figures for 0 to rated current 2.The current not measured side is fixed.
＊6 The sum of +power -power must be less than output power.
＊7 RC is applied to remote ON/OFF option. RC is isolated with input/output and FG.
＊8 ±5,±12,±15 can be used as +10,+24 and +30.
＊9 Please contact us about safety approvals for the model with option.
＊10 Please contact us about class C.
＊ Parallel operation with other model is not possible.
＊ Derating is required when operated with cover.
＊ A sound may occur from power supply at peak loading.

Block diagram

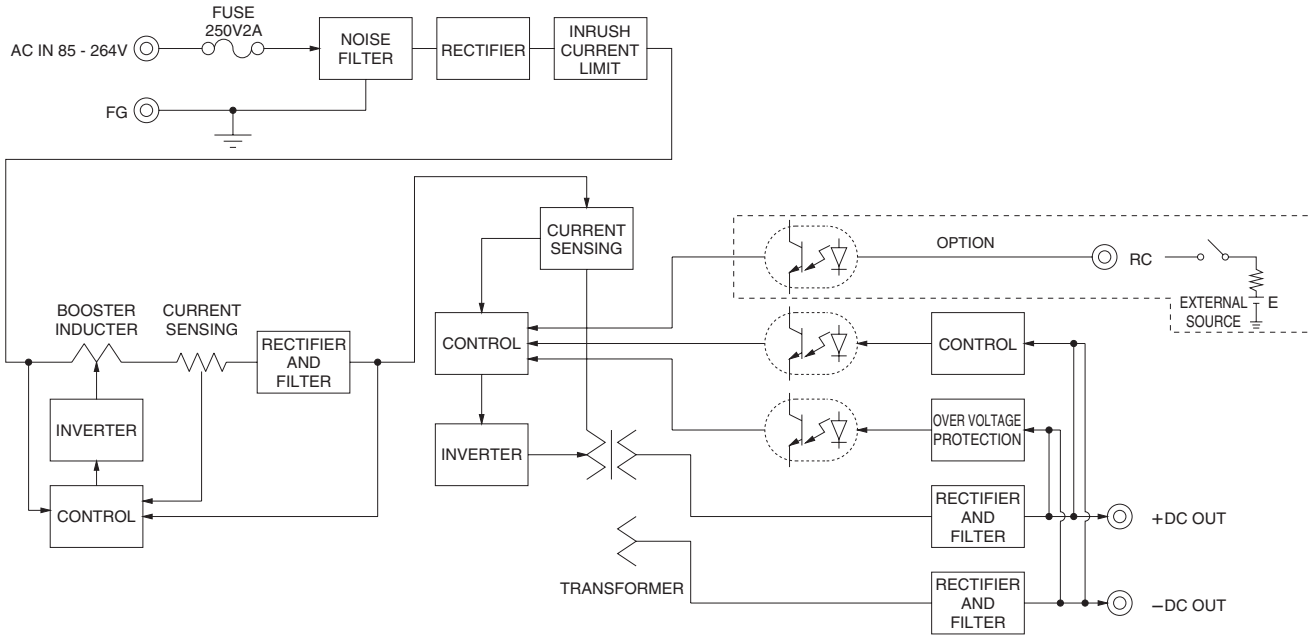

External view

※ External size of option T,J,R,N,N1 and V is different from standard model and refer to 7 Option of instruction manual for details.

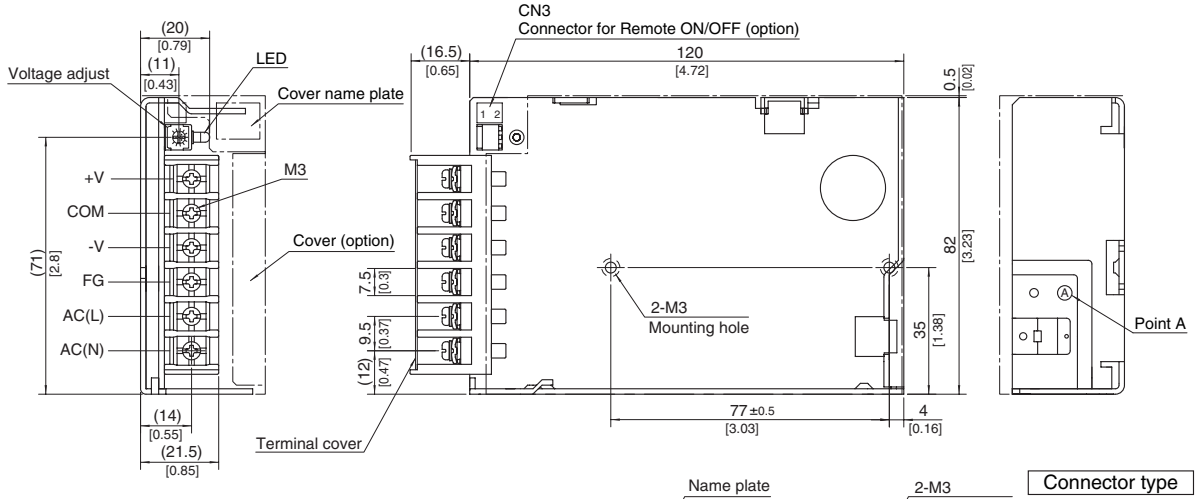

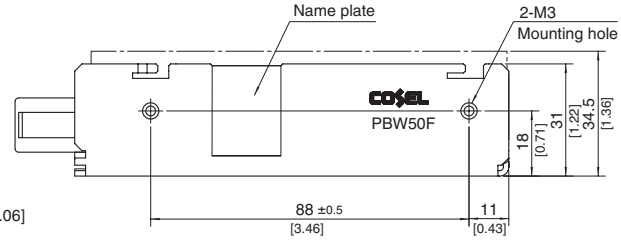

※ Tolerance : ±1 [±0.04]
※ Weight : 280g max (without cover)
※ PCB Material/thickness : CEM3 / 1.6mm [0.06]
※ Chassis material : Aluminum
※ Dimensions in mm, [ ]= inches
※ Mounting torque : 0.49N • m(5kgf • cm)max
※ Screw tightening torque : M3 0.8N • m(8.5kgf • cm)max
※ Please connect safety ground to the unit in 2-M3 holes.

Connector type

CN3 Option (Mfr : J.S.T.)

Pin No.	Contents
1	RC(+)
2	RC(-)

Barrier strip type

Model B2B-XH-A
Mating Connector (Terminal)
XHP-2
(BXH-001T-P0.6
or SXH-001T-P0.6)