Online data sheet



PBSH-RB025SHGEED5A0Z

PBS Hygienic

PRESSURE SENSORS

SICK
Sensor Intelligence.



Illustration may differ

Ordering information

Type	Part no.
PBSH-RB025SHGEED5A0Z	6051864

Other models and accessories ➜ www.sick.com/PBS_Hygienic

Detailed technical data

Features

Medium	Liquid, gaseous
Pressure type	Gauge pressure
Measuring range	0 bar ... 25 bar
Overpressure safety	2-fold
Process temperature	–20 °C ... +125 °C, +150 °C for max. 1 h
Maximum ohmic load R_A	≤ 0.5 kΩ
Zero point adjustment	Max. + 3 % of span
Output signal	2 x PNP + 4 mA ... 20 mA
Rotatable housing	
Display	

Performance

Non-linearity	≤ ± 0.5 %, of span (Best Fit Straight Line, BFSL) according to IEC 61298-2
Accuracy	≤ ± 1 % of the span including non-linearity, hysteresis, zero point and full scale error (corresponds to error of measurement as per IEC 61298-2)
Setting accuracy of switching outputs	≤ ± 0.5 % of span
Response time	3 ms
Long-term drift/one-year stability	≤ ± 0.2 % of the span according to IEC 61298-2
Temperature coefficient in rated temperature range	Typical TC of the zero point: in temperature range 0 °C ... 20 °C: 0.7% of the range / 10 K; in temperature range 20 °C ... 80 °C: 0.2% of span / 10 K. Typical TC of span: in temperature range 0 °C ... 80 °C: 0.1% of span / 10 K
Rated temperature range	0 °C ... +80 °C

Mechanics/electronics

Process connection	G 1 hygienic flush-mounted
Wetted parts	Stainless steel 1.4435 / 316L
Internal transmission fluid	Medical white oil, FDA compliant according to CFR 172.878 and 21 CFR 178.3620(a), compliant to USP, EP, and JP
Housing material	Lower body: stainless steel 304, Plastic head: PC + ABS, Buttons: TPE-E, Display window: PC
Electrical connection	Round connector M12 x 1, 5-pin

Supply voltage	
Power consumption	
Total current consumption	Max. 570 mA (incl. switching current)
Electrical safety	
Insolation voltage	500 V DC
CE-conformity	EMC directive: 2004/108/EC, EN 61326-2-3
Seal	Wetted parts: EPDM
Enclosure rating	IP 65 / IP 67
Protection class III	✓

Ambient data

Ambient temperature	–20 °C ... +80 °C
Storage temperature	–20 °C ... +80 °C
Relative humidity	45 % ... 75 %
Shock load	
Vibration load	

Classifications

ECl@ss 5.0	27371814
ECl@ss 5.1.4	27371814
ECl@ss 6.0	27371814
ECl@ss 6.2	27371814
ECl@ss 7.0	27371814
ECl@ss 8.0	27371814
ECl@ss 8.1	27371814
ECl@ss 9.0	27371814
ETIM 5.0	EC000243
ETIM 6.0	EC000243
UNSPSC 16.0901	41112409

Dimensional drawing (Dimensions in mm (inch))

G 1 hygienic

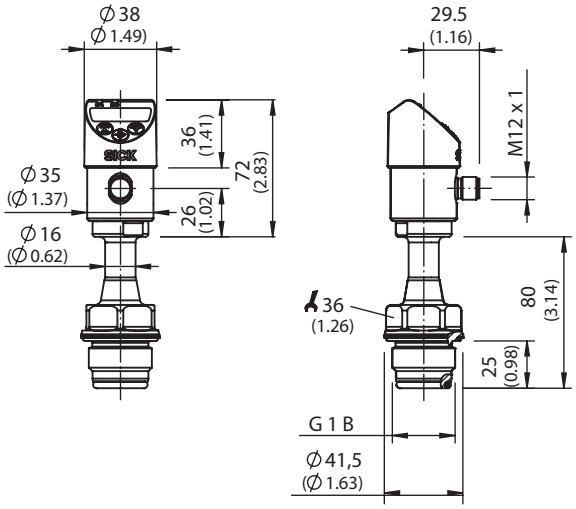

Connection type

Round connector M12 x 1, 5-pin

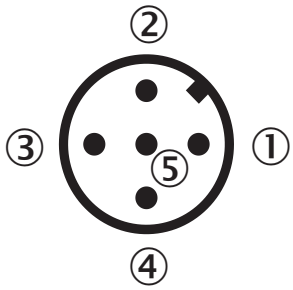

① L^+: Positive supply connection
② Q_2: Switching output 2
③ M: Negative supply connection
④ C/Q_1: Switching output 1 (with IO-Link: communication / switching output 1)
⑤ Q_A: Analog output

Recommended accessories

Other models and accessories ➜ www.sick.com/PBS_Hygienic

	Brief description	Type	Part no.
Flanges			
	Weld-in flange/connector for process connection G 1 hygienic flush-mounted, stainless steel 316L	BEF-FL-316G10-BHYG	5322453

SICK AT A GLANCE

SICK is one of the leading manufacturers of intelligent sensors and sensor solutions for industrial applications. A unique range of products and services creates the perfect basis for controlling processes securely and efficiently, protecting individuals from accidents and preventing damage to the environment.

We have extensive experience in a wide range of industries and understand their processes and requirements. With intelligent sensors, we can deliver exactly what our customers need. In application centers in Europe, Asia and North America, system solutions are tested and optimized in accordance with customer specifications. All this makes us a reliable supplier and development partner.

Comprehensive services complete our offering: SICK LifeTime Services provide support throughout the machine life cycle and ensure safety and productivity.

For us, that is “Sensor Intelligence.”

WORLDWIDE PRESENCE:

Contacts and other locations –www.sick.com