SMT CURRENT SENSE TRANSFORMERS

PB002X Series



- **Height:** 10mm Max
- **Footprint:** 19.9mm x 14.5mm Max
- **Current Rating:** up to 35A
- **Frequency Range:** 50kHz to 500kHz

Electrical Specifications @ 25°C — Operating Temperature -40°C to +130°C

Part [5,6] Number	Turns Ratio	Current [2] Rating (A)	Secondary Inductance (mH MIN)	DCR (mΩ MAX)		Hipot (V_{RMS})
				Primary (11-12)	Secondary (2-4)	
PB0025	50:1	35	1.4	2.8	700	500
PB0026	100:1	35	5.6	2.8	1400	500
PB0027	200:1	35	22.4	2.8	2900	500

NOTES:

1. The temperature of the component (ambient temperature plus temperature rise) must be within the specified operating temperature range.
2. The maximum current rating is based upon temperature rise of the component and represents the DC current which will cause a typical temperature rise of 40°C with no airflow when both one turn windings connected in parallel.
3. To calculate the value of the terminating resistor (Rt) use the following formula: Rt (Ω) = V_{REF} * N / (Ipeak_primary)
4. The peak flux density of the device must remain below 2000 Gauss. To calculate the peak flux density for a uni-polar current use the following formula:

   B_{PK} = 8.0 * V_{REF} * (Duty_Cycle_Max) * 10^5 / (N * Freq_kHz)

   * for bi-polar current applications divide B_{PK} as calculated above by 2.
5. Optional Tape & Reel packaging can be ordered by adding a "**T**" suffix to the part number (i.e. PB0025 becomes PB0025**T**). Pulse complies to industry standard tape and reel specification EIA481.
6. RoHS compliant parts are being introduced. Please contact Pulse for RoHS compliant part availability. If available, order part by adding "**NL**" to part no. (i.e. PB0025 becomes PB0025**NL** and PB0025T becomes PB0025**NL**T).

Mechanical

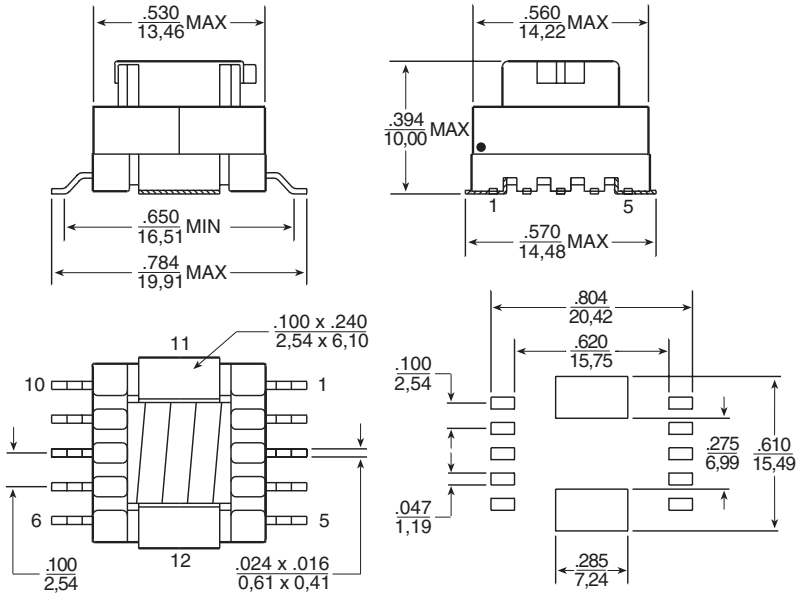

Bottom View

RECOMMENDED PAD LAYOUT

Schematic

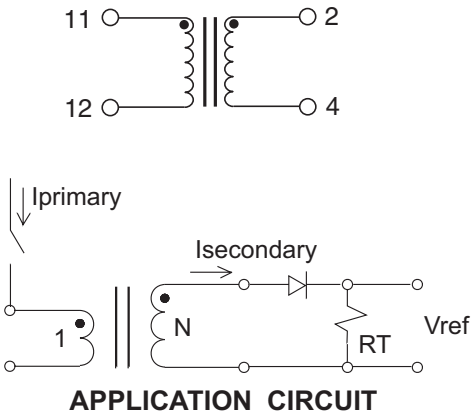

APPLICATION CIRCUIT

Weight . . . . . .4.7 grams
Tray 100/tray
Tape & Reel 300/reel
Coplanarity . . . . . .0.006 inches

Dimensions: Inches / mm

Unless otherwise specified, all tolerances are ± .010 / 0,25