300W Single Output Battery Charger

PB-300 series



Features :

- 3 stage charging
- AC 115/230VAC selected by switch
- Built-in passive PFC function compliance to EN61000-3-2 Class A (option)
- Protection: Overload / Short circuit / Reverse polarity / Over voltage / Over temperature
- Cooling by free air convection
- Charger for lead-acid batteries
- 2 color LED loading indicator
- Low cost, High reliability
- 2 years warranty

c UL us CB (except for 48V) CE (P type only)

PB – 300/360 [P] – 12

1.300W without FAN
2.360W with FAN

P:With Passive PFC
N:Without Passive PFC

12:14.4V
24:28.8V
48:57.6V

SPECIFICATION

MODEL		PB-300□-12	PB-300□-24	PB-300□-48
OUTPUT	BOOST CHARGE VOLTAGE	14.4V	28.8V	57.6V
	FLOAT CHARGE VOLTAGE	13.6V	27.2V	54.4V
	VOLTAGE ADJUSTABLE RANGE	13 ~ 14.7V	26 ~ 28.8V	52 ~ 58.6V
	RECOMMENDED BATTERY CAPACITY(AMP HOURS)(Note 5)	80 ~ 200Ah	40 ~ 125Ah	20 ~ 65Ah
	BATTERY TYPE	Open & Sealed Lead Acid		
	OUTPUT CURRENT(max.)	20.85A	10.5A	5.3A
	CONTINUOUS OUTPUT CURRENT (Typ.) (Note 6)	12.5A	6.25A	3.2A
INPUT	VOLTAGE RANGE	90 ~ 132VAC / 180 ~ 264VAC selected by switch		
	FREQUENCY RANGE	47 ~ 63Hz		
	EFFICIENCY (Typ.)	85%	86%	88%
	POWER FACTOR (Typ.)	>0.65 (with P type) at 230VAC		
	AC CURRENT (Typ.)	6A/115VAC 3A/230VAC		
	INRUSH CURRENT (Typ.)	COLD START 60A		
	LEAKAGE CURRENT	<3.5mA / 240VAC		
PROTECTION	OVERLOAD	90 ~ 110% rated output current		
		Protection type : Constant current limiting, recovers automatically after fault condition is removed		
	SHORT CIRCUIT	O/P Built in fuse (FS100) to protect short circuit condition, shut down o/p voltage and can not re-power on		
	REVERSE POLARITY	By internal fuse		
	OVER VOLTAGE	16 ~ 18V	31 ~ 35V	59 ~ 64V
		Protection type : Shut down o/p voltage, re-power on to recover		
	OVER TEMPERATURE	Protection type : Automatically derate charge current until zero		
FUNCTION	REMOTE CONTROL (CN5)	Open: Normal work Short: Stop Charging		
ENVIRONMENT	WORKING TEMP.	-10 ~ +50℃(Refer to output load derating curve)		
	WORKING HUMIDITY	20 ~ 90% RH non-condensing		
	STORAGE TEMP., HUMIDITY	-40 ~ +85℃, 10 ~ 95% RH		
	TEMP. COEFFICIENT	±0.05%/℃ (0 ~ 45℃)		
	VIBRATION	10 ~ 500Hz, 2G 10min./1cycle, 60min. each along X, Y, Z axes		
SAFETY & EMC (Note 4)	SAFETY STANDARDS	IEC60335-2-29 CB approved by TUV(except for 48V), UL60950-1 approved		
	WITHSTAND VOLTAGE	I/P-O/P:3KVAC I/P-FG:1.5KVAC O/P-FG:0.5KVAC		
	ISOLATION RESISTANCE	I/P-O/P, I/P-FG, O/P-FG:100M Ohms/500VDC		
	EMI CONDUCTION & RADIATION	Compliance to EN55022 (CISPR22) Class B		
	HARMONIC CURRENT	Compliance to EN61000-3-2,-3 (only P type)		
	EMS IMMUNITY	Compliance to EN61000-4-2,3,4,5,6,8,11; ENV50204, EN55024, light industry level, criteria A		
OTHERS	MTBF	115.8Khrs min. MIL-HDBK-217F (25℃)		
	DIMENSION	253*135*48.5mm(L*W*H)		
	PACKING	1.45Kg; 6pcs/9.7Kg/0.95CUFT		

NOTE

1. All parameters NOT specially mentioned are measured at 230VAC input, rated load and 25℃ of ambient temperature.
2. Ripple & noise are measured at 20MHz of bandwidth by using a 12" twisted pair-wire terminated with a 0.1uf & 47uf parallel capacitor.
3. Tolerance : includes set up tolerance, line regulation and load regulation.
4. The power supply is considered a component which will be installed into a final equipment. The final equipment must be re-confirmed that it still meets EMC directives.
5. This is Mean Well's suggested range. Please consult your battery manufacturer for their suggestions about maximum charging current limitation.
6. Test condition is at 25℃, charging current will change under different temperature.

Mechanical Specification

Case No.801B Unit:mm

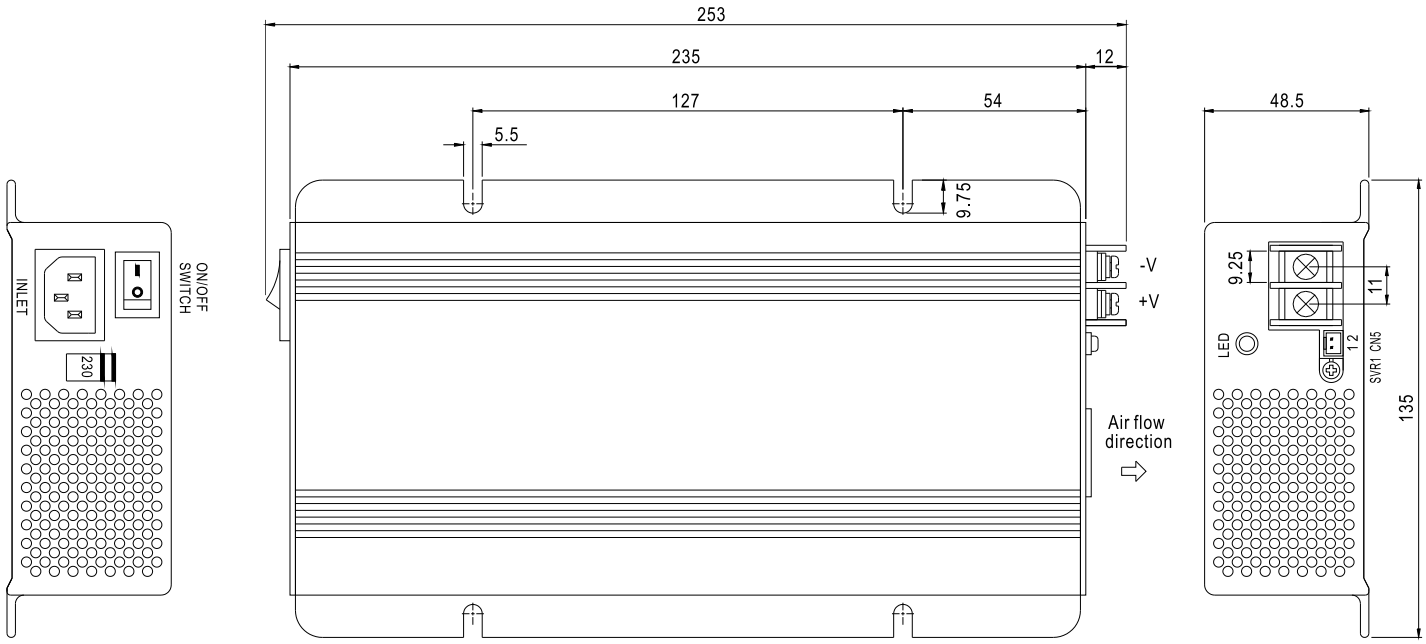

Remote Control(CN5) : JST B2B-XH or equivalent

Assignment	Mating Housing	Terminal
PIN1,2 Open: Normal work	JST XHP or equivalent	JST SXH-001T-P0.6 or equivalent
PIN1,2 Short: Stop Charging		

Block Diagram

fosc : 70KHz

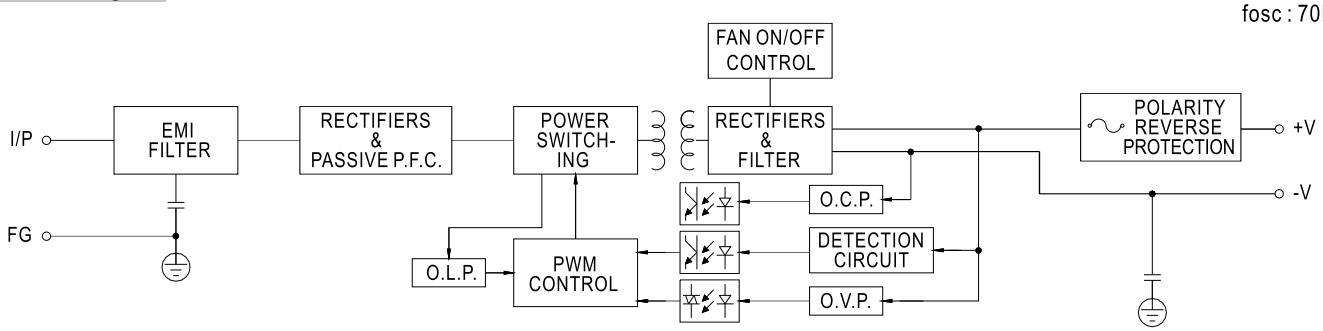

Charging Curve

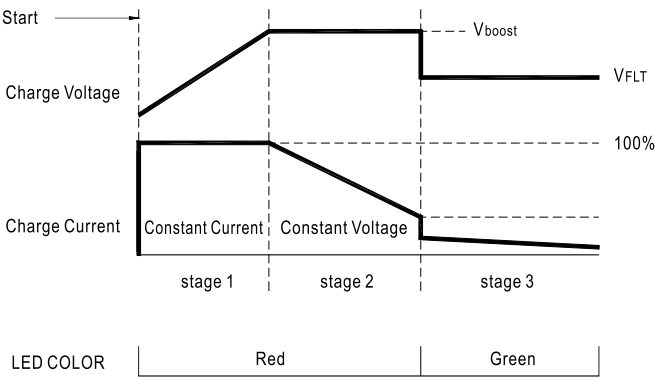

State	PB-300-12	PB-300-24	PB-300-48
Vboost	14.4V	28.8V	57.6V
VFLT	13.6V	27.2V	54.4V

Output Load VS Temperature

