PAM8403

Filterless 3W Class-D Stereo Audio Amplifier

Key Features

- 3W Output at 10% THD with a 4Ω Load and 5V Power Supply
- Filterless, Low Quiescent Current and Low EMI
- Low THD+N
- Superior Low Noise
- Efficiency up to 90%
- Short Circuit Protection
- Thermal Shutdown
- Few External Components to Save the Space and Cost
- Pb-Free Package

Applications

- LCD Monitors / TV Projectors
- Notebook Computers
- Portable Speakers
- Portable DVD Players, Game Machines
- Cellular Phones/Speaker Phones

General Description

The PAM8403 is a 3W, class-D audio amplifier. It offers low THD+N, allowing it to achieve high-quality sound reproduction. The new filterless architecture allows the device to drive the speaker directly, requiring no low-pass output filters,thus to save the system cost and PCB area.

With the same numbers of external components, the efficiency of the PAM8403 is much better than that of class-AB cousins. It can extend the battery life, ideal for portable applications.

The PAM8403 is available in SOP-16 package.

Typical Application

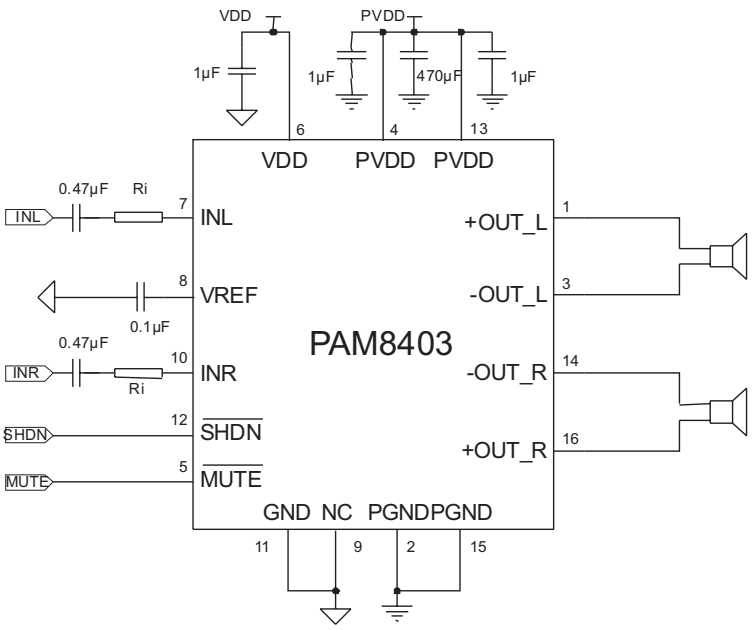

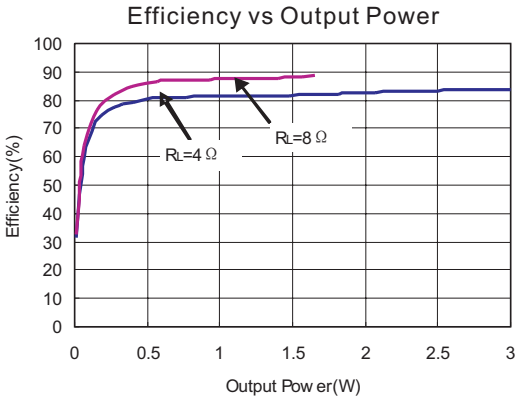

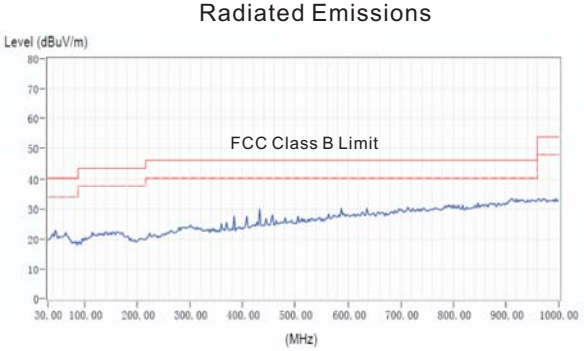

Block Diagram

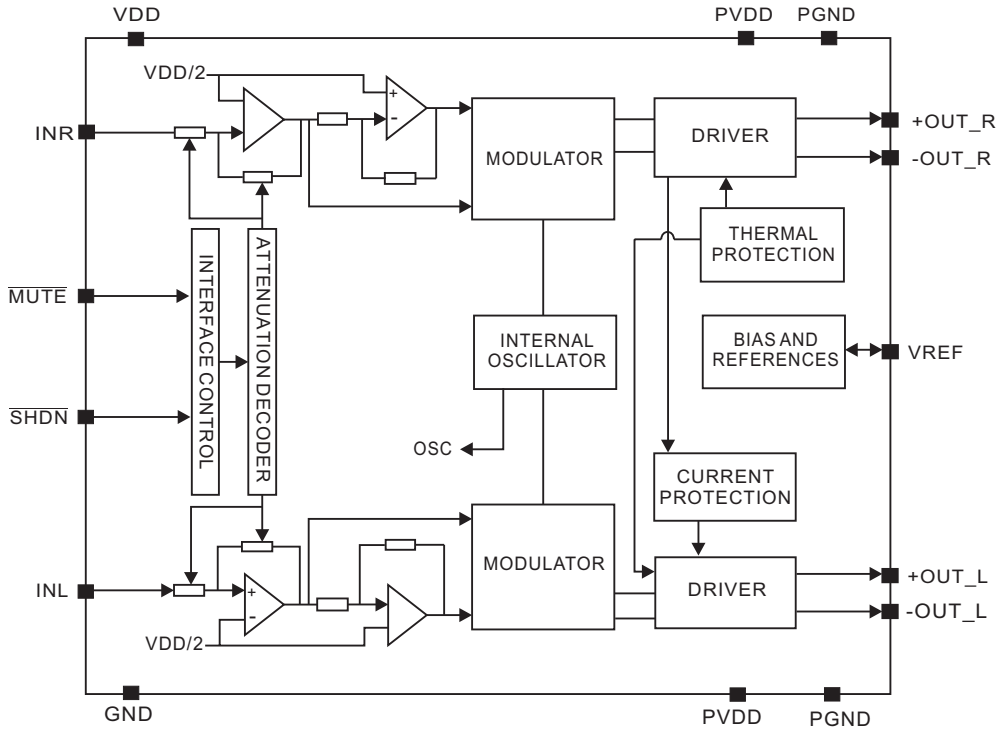

Pin Configuration & Marking Information

Top View
SOP-16

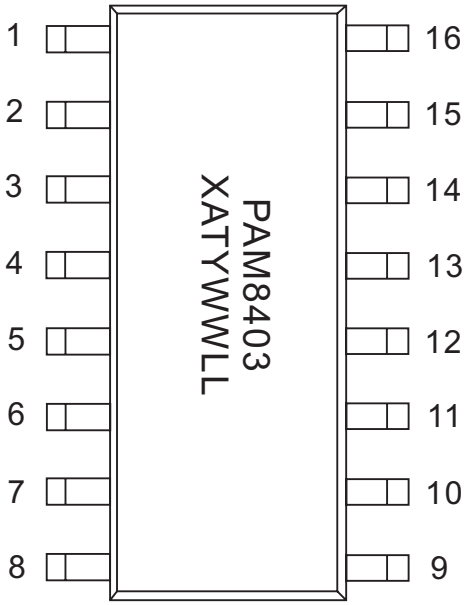

X: Internal Code
A: Assembly Code
T: Testing Code
Y: Year
WW: Week
LL: Internal Code

Pin Descriptions

Pin Number	Pin Name	Description
1	+OUT_L	Left Channel Positive Output
2	PGND	Power GND
3	-OUT_L	Left Channel Negative Output
4	PVDD	Power VDD
5	$\overline{\text{MUTE}}$	Mute Control Input（active low）
6	VDD	Analog VDD
7	INL	Left Channel Input
8	VREF	Internal analog reference, connect a bypass capacitor from VREF to GND
9	NC	No connect
10	INR	Right Channel Input
11	GND	Analog GND
12	$\overline{\text{SHDN}}$	Shutdown Control Input (active low)
13	PVDD	Power VDD
14	-OUT_R	Right Channel Negative Output
15	PGND	Power GND
16	+OUT_R	Right Channel Positive Output

Absolute Maximum Ratings

These are stress ratings only and functional operation is not implied. Exposure to absolute maximum ratings for prolonged time periods may affect device reliability. All voltages are with respect to ground.

Supply Voltage 6.6V
Input Voltage.....-0.3V to V_{DD}+0.3V
Operation Temperature Range.....-40°C to 85°C
Maximum Junction Temperature.....150°C
Operation Junction Temperature.....-40°C to 125°C
Storage Temperature.....-65°C to 150°C
Soldering Temperature.....300°C, 5sec

Recommended Operating Conditions

Supply voltage Range.....2.5V to 5.5V
Max. Supply Voltage (for Max. duration of 30 minutes).....6.4V
Operation Temperature Range.....-40°C to 85°C
Junction Temperature Range.....-40°C to 125°C

Thermal Information

Parameter	Symbol	Package	Maximum	Unit
Thermal Resistance (Junction to Ambient)	θ_{JA}	SOP-16	110	°C/W
Thermal Resistance (Junction to Case)	θ_{JC}	SOP-16	23	°C/W

Electrical Characteristic

V_{DD}=5V, Gain=24dB, R_L=8Ω, T_A=25°C, unless otherwise noted.

Symbol	Parameter	Test Conditions		MIN	TYP	MAX	UNIT
V_{IN}	Supply Power			2.5		5.5	V
Po	Output Power	THD+N=10%,f=1kHz, R_L=4 Ω	V_{DD}=5.0V		3.2		W
			V_{DD}=3.6V		1.6		
			V_{DD}=3.0V		1.3		
		THD+N=1%,f=1kHz, R_L=4 Ω	V_{DD}=5.0V		2.5		W
			V_{DD}=3.6V		1.3		
			V_{DD}=3.0V		0.85		
		THD+N=10%,f=1kHz, R_L=8 Ω	V_{DD}=5.0V		1.8		W
			V_{DD}=3.6V		0.9		
			V_{DD}=3.0V		0.6		
		THD+N=1%,f=1kHz, R_L=8 Ω	V_{DD}=5.0V		1.4		W
			V_{DD}=3.6V		0.72		
			V_{DD}=3.0V		0.45		
THD+N	Total Harmonic Distortion Plus Noise	V_{DD}=5.0V,Po=0.5W,R_L=8 Ω	f=1kHz		0.15		%
		V_{DD}=3.6V,Po=0.5W,RL=8 Ω			0.11		
		V_{DD}=5.0V,Po=1W,R_L=4 Ω	f=1kHz		0.15		%
		V_{DD}=3.6V,Po=1W,R_L=4 Ω			0.11		
Gv	Gain				24		dB
PSRR	Power Supply Ripple Rejection	V_{DD}=5.0V, Inputs ac-grounded with C_{IN}=0.47μF	f=100Hz		-59		dB
			f=1kHz		-58		
Cs	Crosstalk	V_{DD}=5V,Po=0.5W,R_L=8Ω,Gv=20dB	F=1kHz		-95		dB
SNR	Signal-to-noise ratio	V_{DD}=5V, Vorms=1V,Gv=20dB	f=1kHz		80		dB
Vn	Output noise	V_{DD}=5V, Inputs ac-grounded with C_{IN}=0.47μF	A-weighting		100		μV
			No A-weighting		150		
Dyn	Dynamic range	V_{DD}=5.0V, THD=1%	f=1kHz		90		dB
η	Efficiency	R_L=8Ω, THD=10%	f=1kHz		87		%
		R_L=4Ω, THD=10%			83		
I_Q	Quiescent Current	V_{DD}=5.0V	No load		16		mA
		V_{DD}=3.6V			10		
		V_{DD}=3.0V			8		

Electrical Characteristic (Continued)

V_{DD}=5V Gain=24dB, R_L=8Ω, T_A=25°C, unless otherwise noted.

Symbol	Parameter	Test Conditions		MIN	TYP	MAX	UNIT
I_{MUTE}	Muting Current	V_{DD}=5.0V	V_{MUTE}=0.3V		3.5		mA
I_{SD}	Shutdown Current	V_{DD}=2.5V to 5.5V	Vsd=0.3V		<1		μA
Rdson	Static Drain-to-source On-state Resistor	I_{DS}=500mA,Vgs=5V	PMOS		180		mΩ
			NMOS		140		
fsw	Switching Frequency	V_{DD}=3V to 5V			260		kHz
Vos	Output Offset Voltage	Vin=0V, V_{DD}=5V			10		mV
V_{IH}	Enable Input High Voltage	V_{DD}=5.0V		1.5	1.4		V
V_{IL}	Enable Input Low Voltage	V_{DD}=5.0V			0.7	0.4	
V_{IH}	MUTE Input High Voltage	V_{DD}=5.0V		1.5	1.4		V
V_{IL}	MUTE Input Low Voltage	V_{DD}=5.0V			0.7	0.4	
OTP	Over Temperature Protection	No Load, Junction Temperature	V_{DD}=5V		140		°C
OTH	Over Temperature Hysterisis				30		

Typical Operating Characteristics (T_A=25°C)

1. THD+N vs Output Power

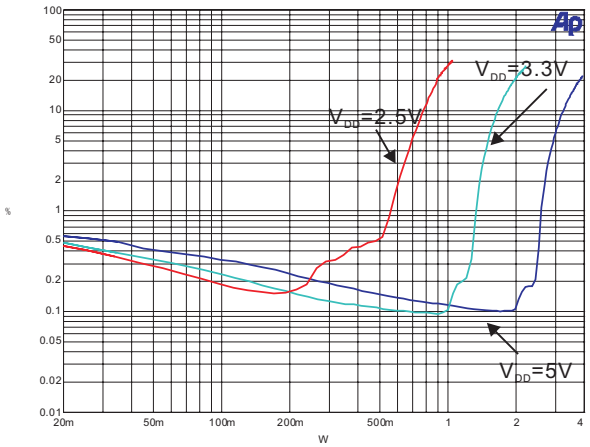

R_L=4Ω, Gain = 24dB, f=1kHz

2. THD+N vs Output Power

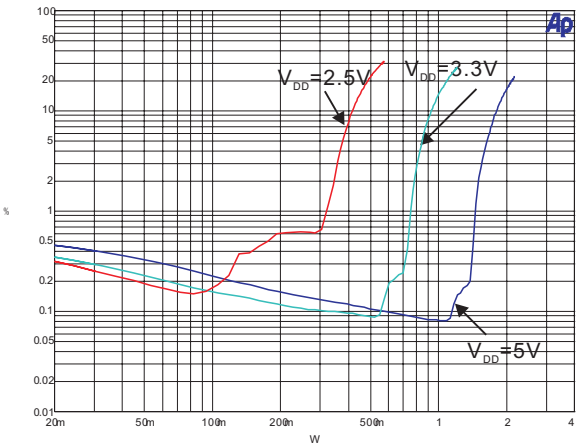

R_L=8Ω, Gain = 24dB, f=1kHz

3. THD+N vs Frequency

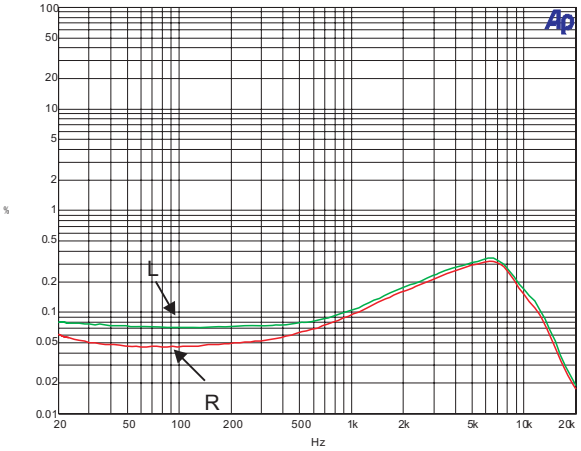

V_{DD}=5V, R_L=4Ω,Gain = 24dB, Cin=1μF

4. THD+N vs Frequency

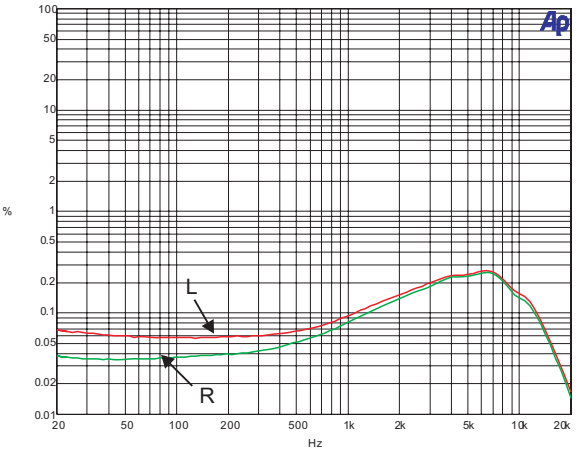

V_{DD}=5V, R_L=8Ω,Gain = 24dB, Cin=1μF

Typical Operating Characteristics (continued)

5. Frequency response

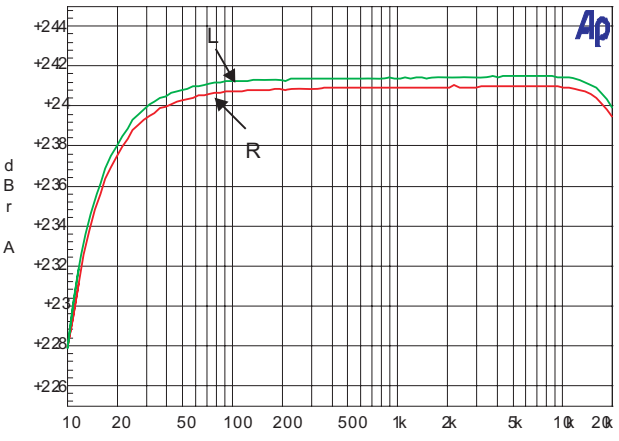

V_{DD}=5V, R_L=8Ω,Gain= 24dB, Cin=1μF

6. Crosstalk VS Frequency

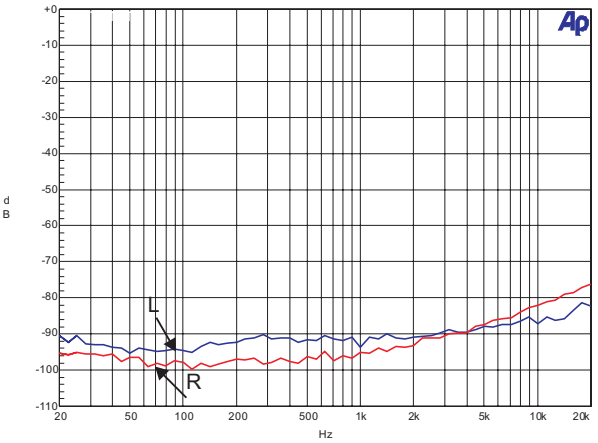

V_{DD}=5V, R_L=4Ω,Gv=24dB, Po=0.5W

7. Noise Floor FFT

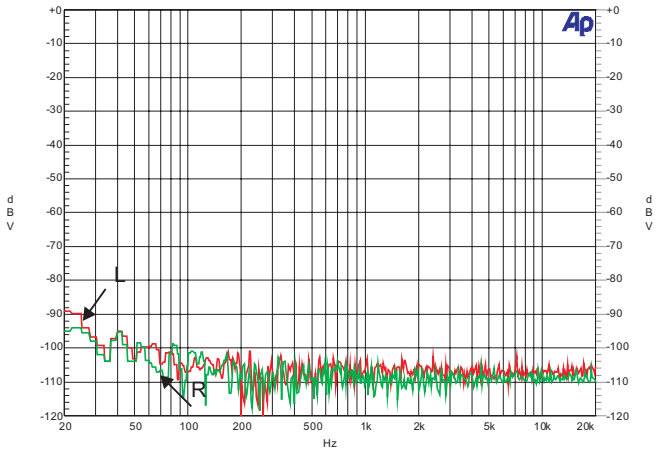

Inputs ac-ground, V_{DD}=5V, R_L=8Ω,Cin=1μF

Application Notes

1. When the PAM8403 works with LC filters, it should be connected with the speaker before it's powered on, otherwise it will be damaged easily.

2. When the PAM8403 works without LC filters, it's better to add a ferrite chip bead at the outgoing line of speaker for suppressing the possible electromagnetic interference.

3. The recommended operating voltage is 5.5V. When the PAM8403 is powered with 4 battery cells, it should be noted that the voltage of 4 new dry or alkaline batteries is over 6.0V, higher than its operation voltage, which will probably damage the device. Therefore, it's recommended to use either 4 Ni-MH (Nickel Metal Hydride) rechargeable batteries or 3 dry or alkaline batteries.

4. One should not make the input signal too large. Large signal can cause the clipping of output signal when increasing the volume. This will damage the device because of big gain of the PAM8403.

5. When testing the PAM8403 without LC filters by using resistor instead of speaker as the output load, the test results, e.g. THD or efficiency, will be worse than those of using speaker as load.

Test Setup for Performance Testing

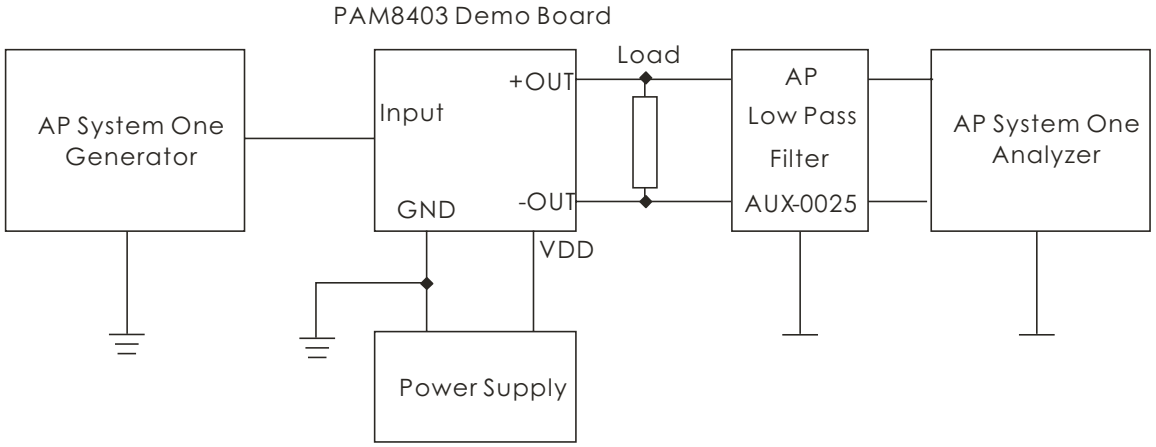

Notes

1. The AP AUX-0025 low pass filter is necessary for class-D amplifier measurement with AP analyzer.
2. Two 22μH inductors are used in series with load resistor to emulate the small speaker for efficiency measurement.

Application Information

Maximum Gain

As shown in block diagram (page 2), the PAM8403 has two internal amplifier stages. The first stage's gain is externally configurable, while the second stage's is internally fixed. The closed-loop gain of the first stage is set by selecting the ratio of R_f to R_i while the second stage's gain is fixed at 2x.The output of amplifier 1 serves as the input to amplifier 2, thus the two amplifiers produce signals identical in magnitude, but different in phase by 180°. Consequently, the differential gain for the IC is

$$A_{VD}=20*\log [2*(R_f/R_i)]$$

The PAM8403 sets maximum R_f=142kΩ, minimum R_i=18kΩ, so the maximum closed-gain is 24dB.

Mute Operation

The $\overline{\text{MUTE}}$ pin is an input for controlling the output state of the PAM8403. A logic low on this pin disables the outputs, and a logic high on this pin enables the outputs. This pin may be used as a quick disable or enable of the outputs without a volume fade. Quiescent current is listed in the electrical characteristic table. The $\overline{\text{MUTE}}$ pin can be left floating due to the internal pull-up.

Shutdown operation

In order to reduce power consumption while not in use, the PAM8403 contains shutdown circuitry to turn off the amplifier's bias circuitry. This shutdown feature turns the amplifier off when logic low is applied to the $\overline{\text{SHDN}}$ pin. By switching the $\overline{\text{SHDN}}$ pin connected to GND, the PAM8403 supply current draw will be minimized in idle mode. The $\overline{\text{SHDN}}$ pin can be left floating due to the internal pull-up.

Power supply decoupling

The PAM8403 is a high performance CMOS audio amplifier that requires adequate power supply decoupling to ensure the output THD and PSRR as low as possible. Power supply decoupling affects low frequency response. Optimum decoupling is achieved by using two capacitors of different types targeting to different types of noise on the power supply leads. For higher frequency transients, spikes, or digital hash on the line, a good low equivalent-series-resistance (ESR) ceramic capacitor, typically 1.0μF, works best, placing it as close as possible to the device V_{DD} terminal. For filtering lower-frequency noise signals, a large capacitor of 20μF (ceramic) or greater is recommended, placing it near the audio power amplifier.

Input Capacitor (C_i)

Large input capacitors are both expensive and space hungry for portable designs. Clearly, a certain sized capacitor is needed to couple in low frequencies without severe attenuation. But in many cases the speakers used in portable systems, whether internal or external, have little ability to reproduce signals below 100Hz to 150Hz. Thus, using a large input capacitor may not increase actual system performance. In this case, input capacitor (C_i) and input resistance (R_i) of the amplifier form a high-pass filter with the corner frequency determined by equation below,

$$f_C=\frac{1}{2\pi R_i C_i}$$

In addition to system cost and size, click and pop performance is affected by the size of the input coupling capacitor, C_i. A larger input coupling capacitor requires more charge to reach its quiescent DC voltage (nominally 1/2 V_{DD}). This charge comes from the internal circuit via the feedback and is apt to create pops upon device enable. Thus, by minimizing the capacitor size based on necessary low frequency response, turn-on pops can be minimized.

Analog Reference Bypass Capacitor (C_{BYP})

The Analog Reference Bypass Capacitor (C_{BYP}) is the most critical capacitor and serves several important functions. During start-up or recovery from shutdown mode, C_{BYP} determines the rate at which the amplifier starts up. The second function is to reduce noise caused by the power supply coupling into the output drive signal. This noise is from the internal analog reference to the amplifier, which appears as degraded PSRR and THD+N.

A ceramic bypass capacitor (C_{BYP}) with values of 0.47μF to 1.0μF is recommended for the best THD and noise performance. Increasing the bypass capacitor reduces clicking and popping noise from power on/off and entering and leaving shutdown.

Under Voltage Lock-out (UVLO)

The PAM8403 incorporates circuitry designed to detect low supply voltage. When the supply voltage drops to 2.0V or below, the PAM8403 outputs are disabled, and the device comes out of this state and starts to normal function when V_{DD} ⩾2.2V.

Short Circuit Protection (SCP)

The PAM8403 has short circuit protection circuitry on the outputs to prevent damage to the device when output-to-output or output-to-GND short occurs. When a short circuit is detected on the outputs, the outputs are disabled immediately. If the short was removed, the device activates again.

Over Temperature Protection

Thermal protection on the PAM8403 prevents the device from damage when the internal die temperature exceeds 140°C. There is a 15 degree tolerance on this trip point from device to device. Once the die temperature exceeds the thermal set point, the device outputs are disabled. This is not a latched fault. The thermal fault is cleared once the temperature of the die is reduced by 30°C. This large hysteresis will prevent motor boating sound well and the device begins normal operation at this point without external system intervention.

How to Reduce EMI (Electro Magnetic Interference)

A simple solution is to put an additional capacitor 1000μF at power supply terminal for power line coupling if the traces from amplifier to speakers are short (<20cm).

Most applications require a ferrite bead filter as shown in Figure 2. The ferrite filter reduces EMI of around 1 MHz and higher. When selecting a ferrite bead, choose one with high impedance at high frequencies, and low impedance at low frequencies.

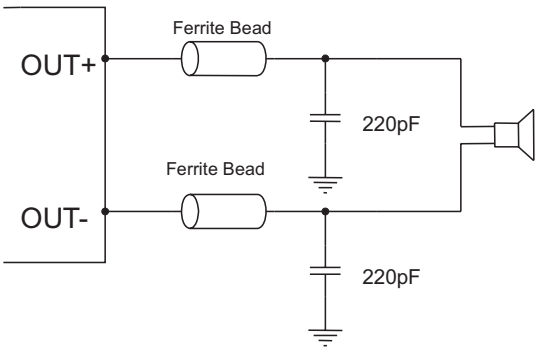

Figure 2: Ferrite Bead Filter to reduce EMI

Ordering Information

PAM8403 X X

Shipping Package

Package Type

Part Number	Marking	Package Type	MOQ/Shipping Package
PAM8403DR	PAM8403 XATYWWLL	SOP-16	2,500 Units/Tape&Reel

Outline Dimension

SOP-16

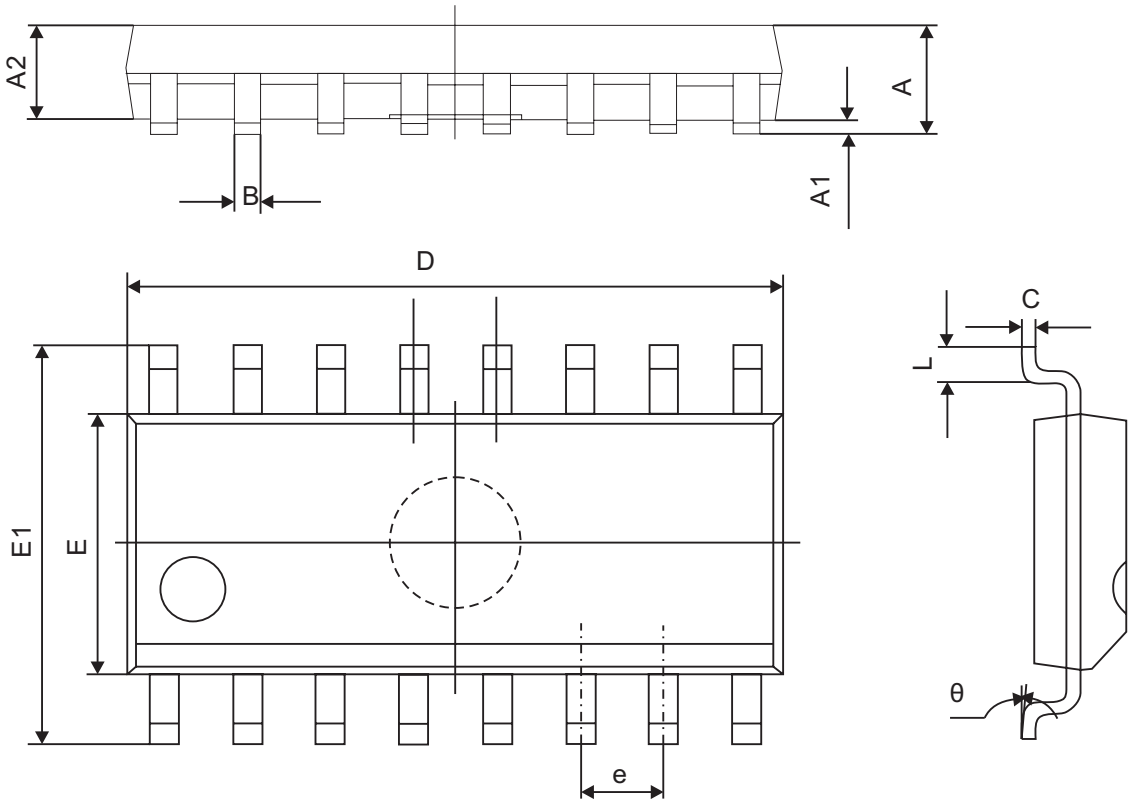

Symbol	Dimensions Millimeters	
	Min	Max
A	1.350	1.750
A1	0.100	0.250
A2	1.350	1.550
B	0.330	0.510
C	0.190	0.250
D	9.800	10.000
E	3.800	4.000
E1	5.800	6.300
e	1.270(TYP)	
L	0.400	1.270
θ	0°	8°