SPECIFICATION

Part No.	**:**	**PA.11**
Specification No	:	PA-2400-15-10-A-02
Product Name	**:**	2.4GHz Band Dielectric Ceramic PIFA SMT Antenna for Bluetooth/WLAN/Zigbee Applications
Description	:	2400-2484Mhz, 1.5dBi Peak Gain Size: 10mm*4mm*3mm Designed for the top right hand corner edge of the Component side of the board (bottom left corner edge) SMT Mount RoHS Compliant

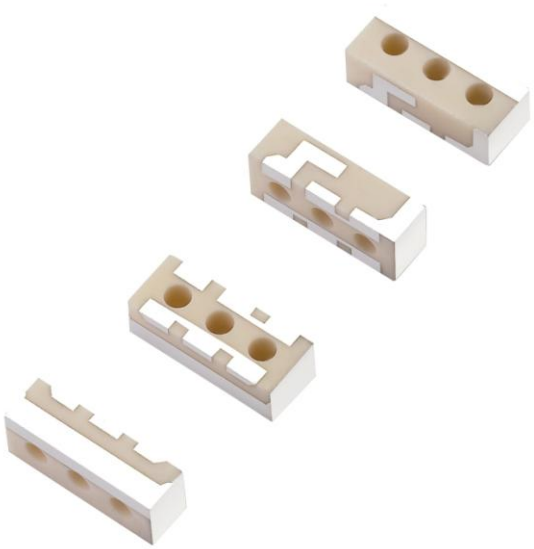

1.0 Scope

This specification covers the Dielectric PIFA Antenna for 2400-2484MHz, covering such applications as Wi-Fi, Bluetooth and Zigbee. A ceramic dielectric
PIFA antenna offers smallest footprint, superior gain characteristics and improved isolation over traditional PCB based antennas. This antenna has been developed for the top right hand corner edge of the component side of the Board (bottom left corner edge), the antenna has to be positioned on a non-ground (copper/metal free) area with the feed-point matched direct to the module. Please refer to Recommended Foot print Diagram (8.0 Page 13.).

2.0 Electrical Specifications

The antenna has the electrical characteristics given in Table 1 under the Taoglas standard installation conditions as shown in the Evaluation Board. figure.

No.	Parameter	Specification
1	Working Frequency	2400MHz ~ 2484MHz
2	Dimensions	10*4*3mm
3	Peak Gain	1.5 dBi max
4	Polarization	Linear
5	Impedance	50 Ω
6	VSWR	2.0 max
7	Operating Temperature	-40~+85°C
8	Termination	Ag(Environmentally Friendly Lead-Free)

* Data is measured on Taoglas Standard Reference PCB

3.0 S11 Response Curve

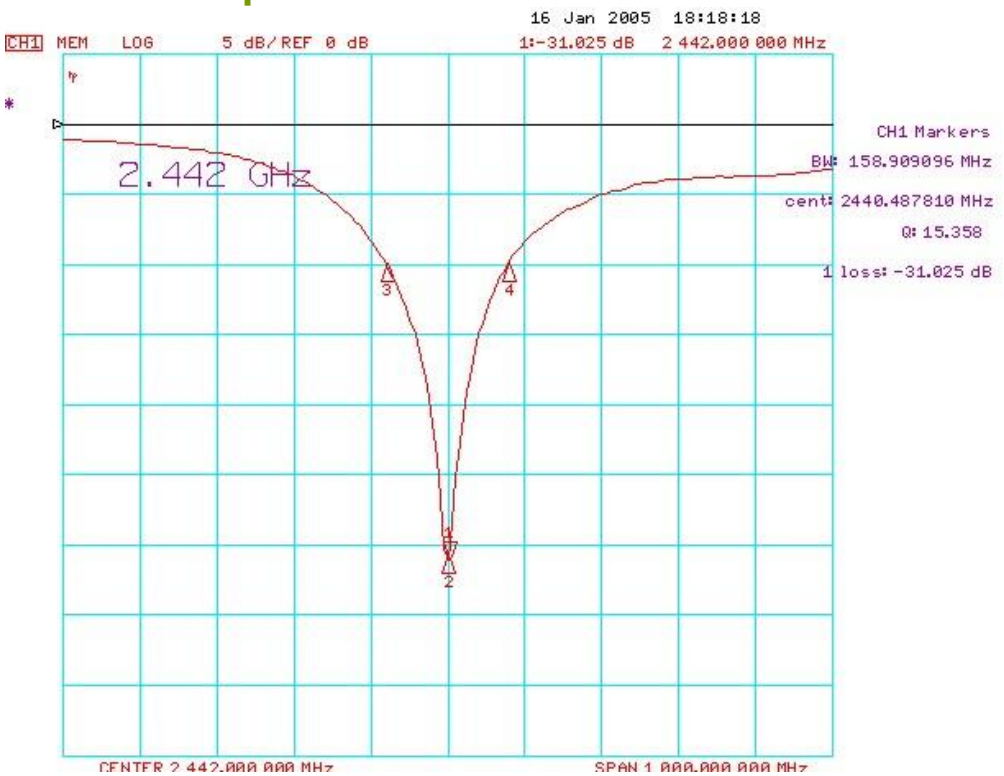

* Gain is measured on test PCB (40*80*0.8)
* Ant position: Right side, top corner edge, horizontal

4.0 Test Position

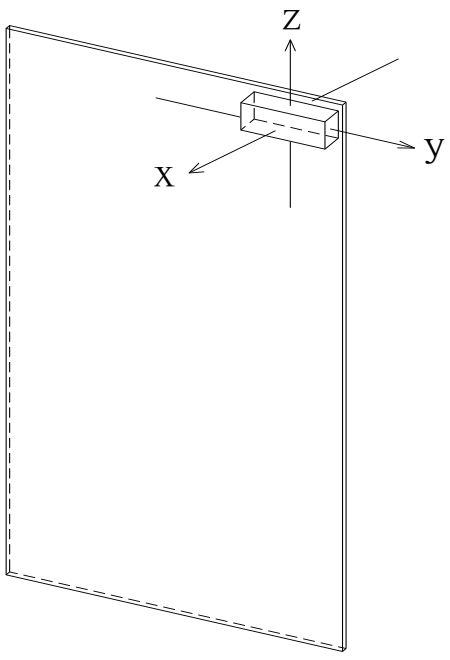

5.0 Summary of Test Results

5.1 Gain & Efficiency

	Frequency (GHz)	Peak Gain(dBi)	Efficiency (%)
1	2.400	2.78	80.64
2	2.442	31.2	85.65
3	2.450	3.27	86.50
4	2.4835	2.76	75.91
5	2.500	2.34	68.07

5.2 Power Average Gain

	Frequency (GHz)	Plane	Average Gain (dBi)
1	2.400	XY plane YZ plane XZ plane	-1.622 -1.324 -0.561
2	2.442	XY plane YZ plane XZ plane	-2.464 -0.859 -0.312
3	2.450	XY plane YZ plane XZ plane	-1.424 -0.950 -0.224
4	2.4835	XY plane YZ plane XZ plane	-2.949 -1.548 -0.784
5	2.500	XY plane YZ plane XZ plane	-2.444 -2.084 -1.258

6.0 Antenna Pattern – Wi-Fi & Bluetooth

Frequency: 2.400 GHz

Far-field Power Distribution on X-Z Plane(E-Plane of L3 Pol Sense)
Gain=2.78 dBi; Total Radiating Efficiency: 80.64% @2.40000 GHz

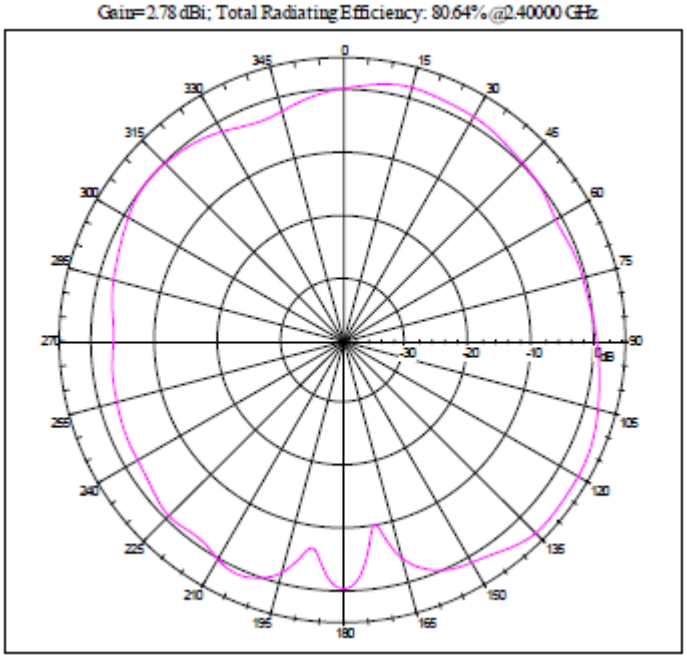

Far-field Power Distribution on Y-Z Plane(H-Plane of L3 Pol Sense)
Gain=2.78 dBi; Total Radiating Efficiency: 80.64% @2.40000 GHz

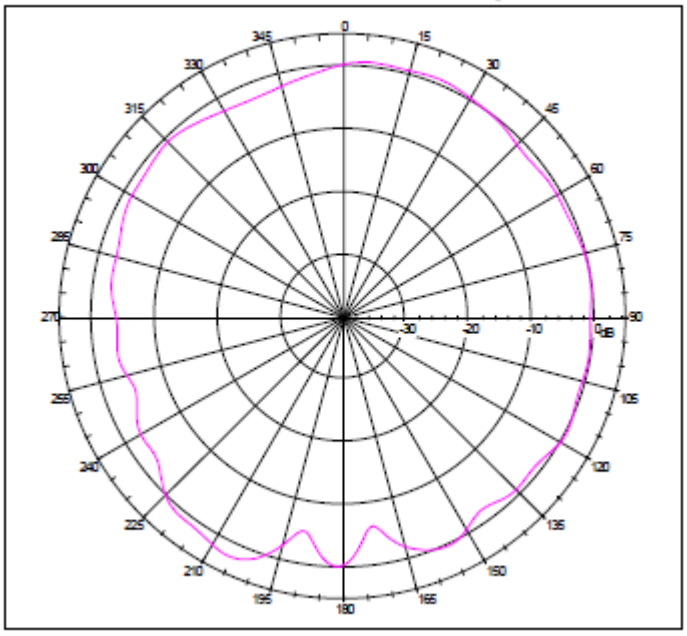

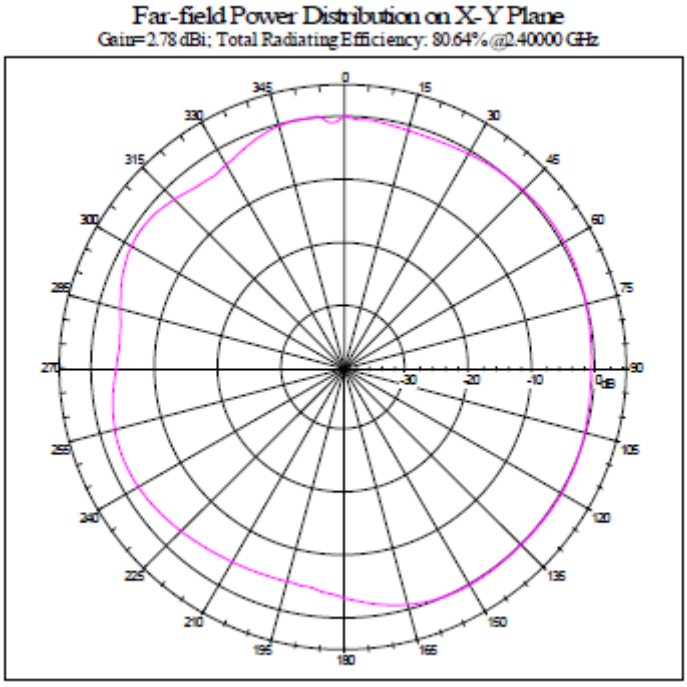

Frequency: 2.442 GHz

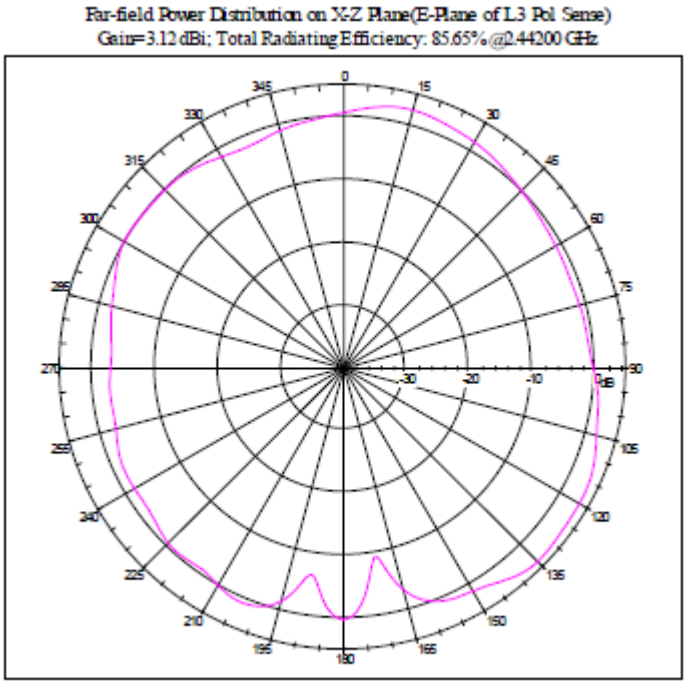

Far-field Power Distribution on Y-Z Plane(H-Plane of L3 Pol Sense)
Gain=3.12 dBi; Total Radiating Efficiency: 85.65% @2.44200 GHz

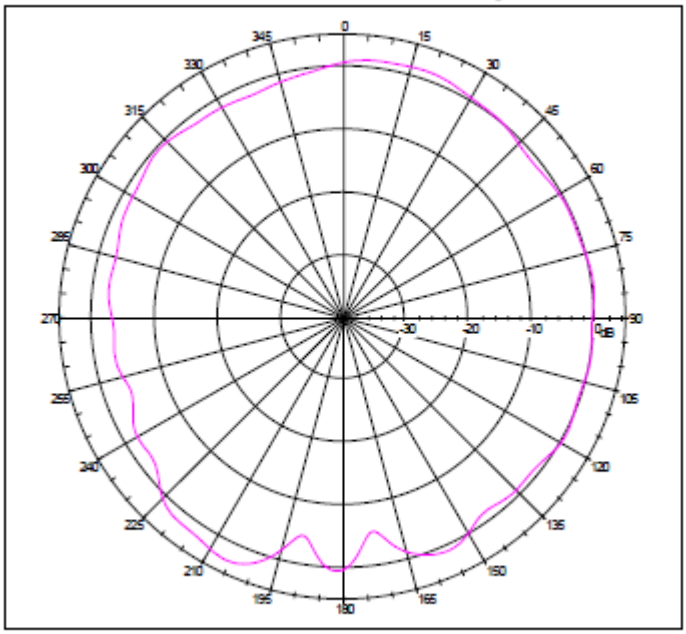

Far-field Power Distribution on X-Y Plane
Gain=3.12 dBi; Total Radiating Efficiency: 85.65% @2.44200 GHz

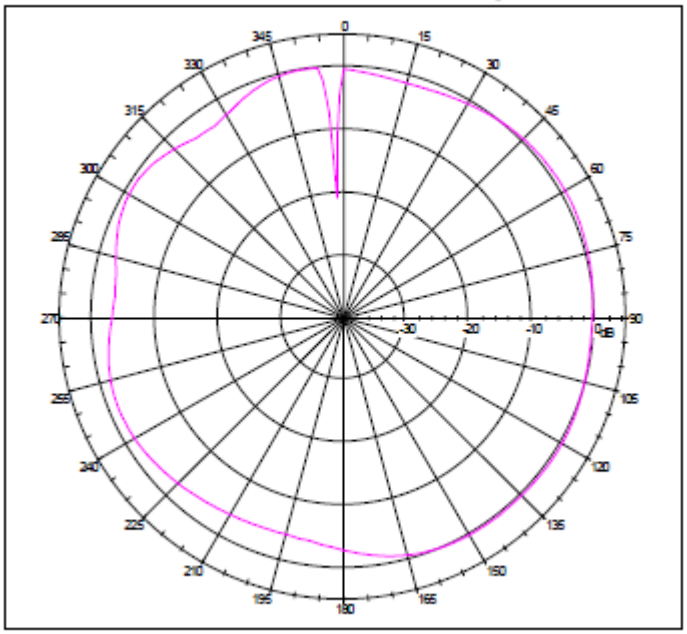

Frequency: 2.450 GHz

Far-field Power Distribution on X-Z Plane(E-Plane of L3 Pol Sense)
Gain=3.27 dBi; Total Radiating Efficiency: 86.20% @2.45000 GHz

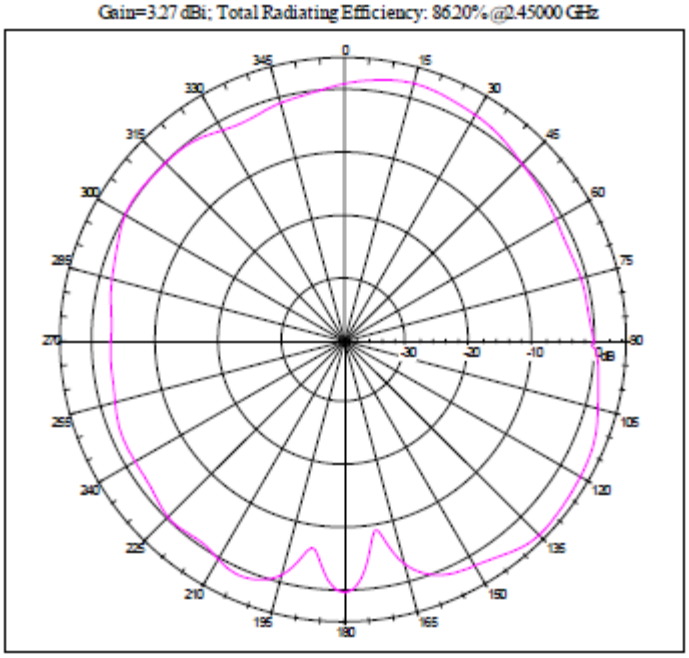

Far-field Power Distribution on Y-Z Plane(H-Plane of L3 Pol Sense)
Gain=3.27 dBi; Total Radiating Efficiency: 86.20% @2.45000 GHz

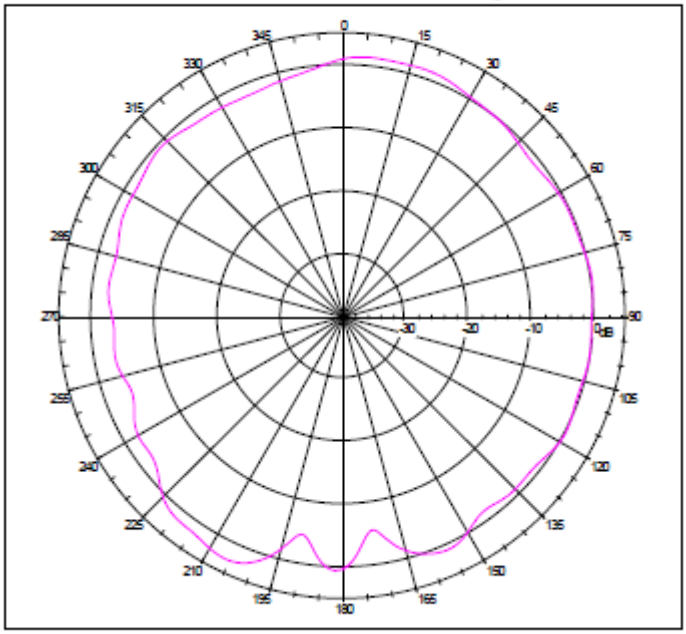

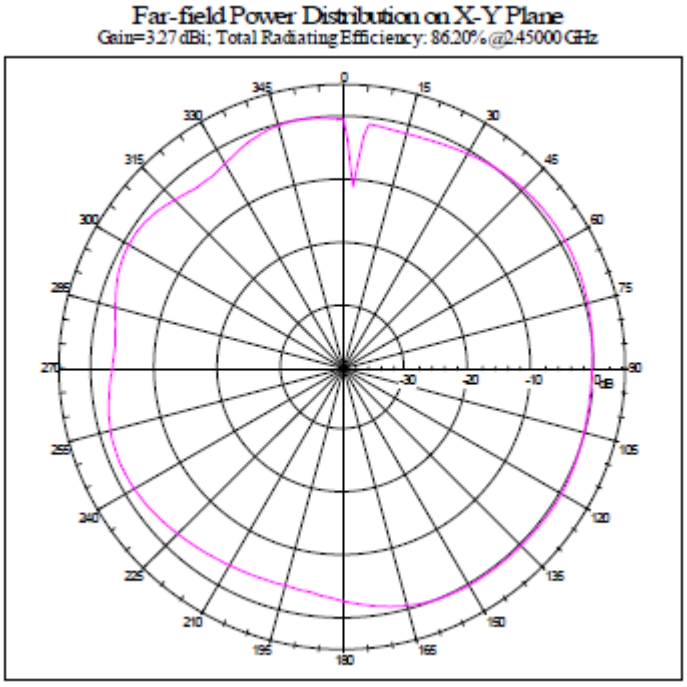

Frequency: 2.4835 GHz

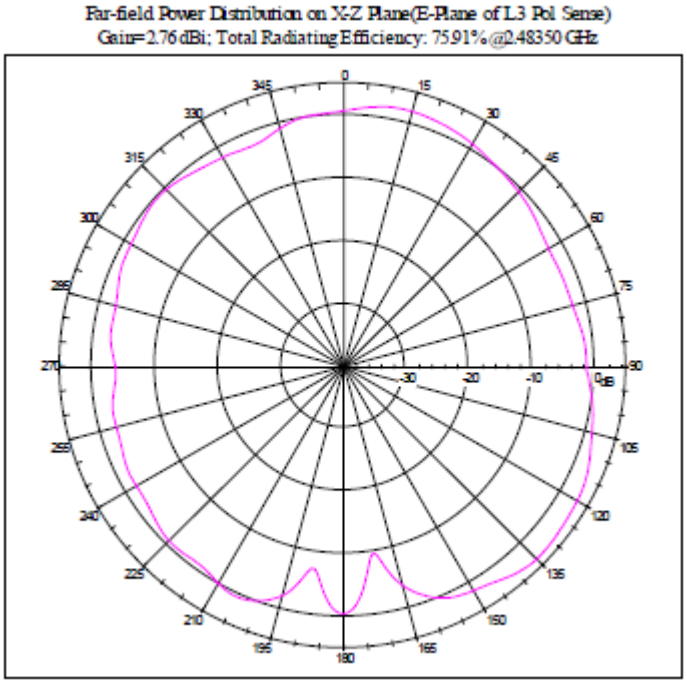

Far-field Power Distribution on Y-Z Plane(H-Plane of L3 Pol Sense)
Gain=2.76 dBi; Total Radiating Efficiency: 75.91% @2.48350 GHz

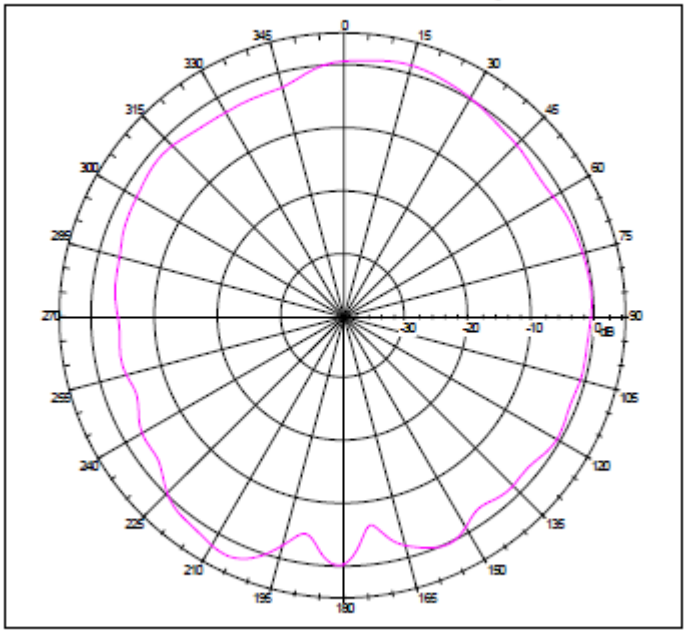

Far-field Power Distribution on X-Y Plane
Gain=2.76 dBi; Total Radiating Efficiency: 75.91% @2.48350 GHz

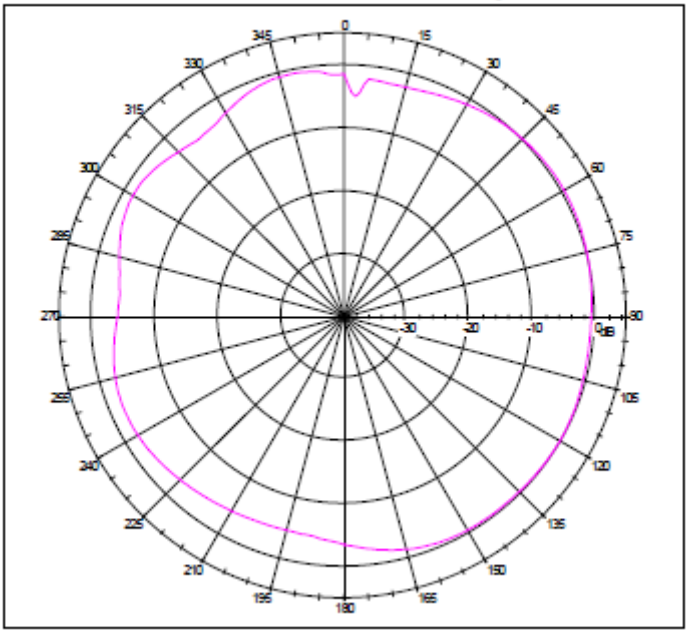

Frequency: 2.500 GHz

Far-field Power Distribution on X-Z Plane(E-Plane of L3 Pol Sense)
Gain=2.34 dBi; Total Radiating Efficiency: 68.07% @2.50000 GHz

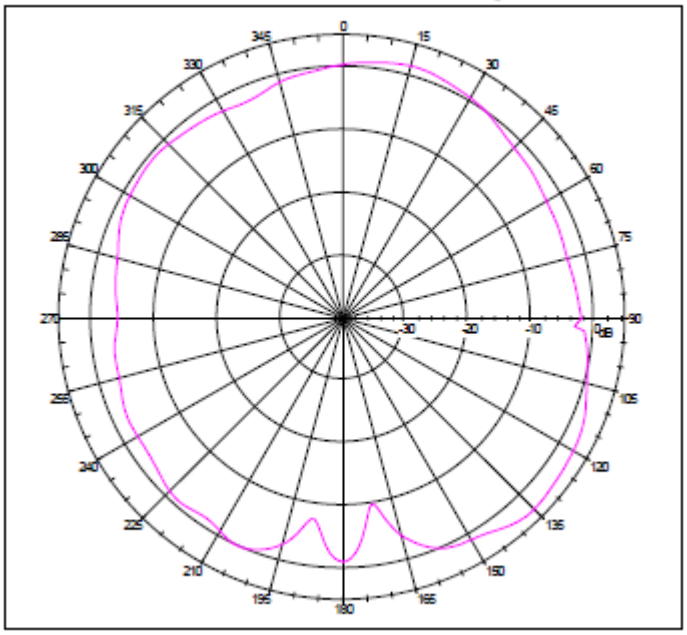

Far-field Power Distribution on Y-Z Plane(H-Plane of L3 Pol Sense)
Gain=2.34 dBi; Total Radiating Efficiency: 68.07% @2.50000 GHz

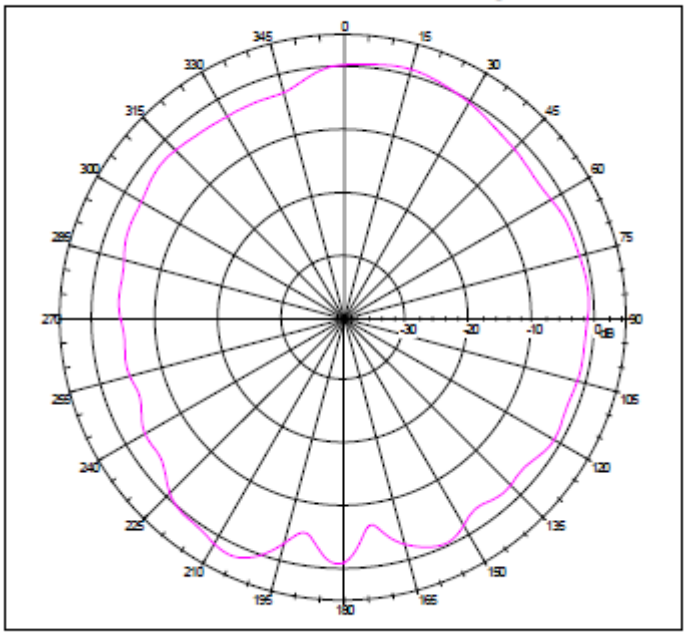

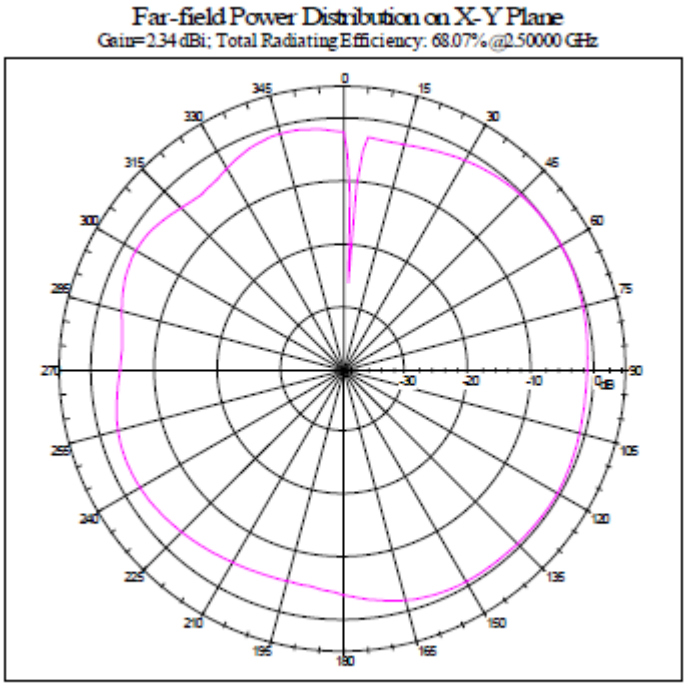

7.0 Drawing

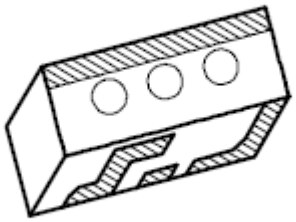

3D View

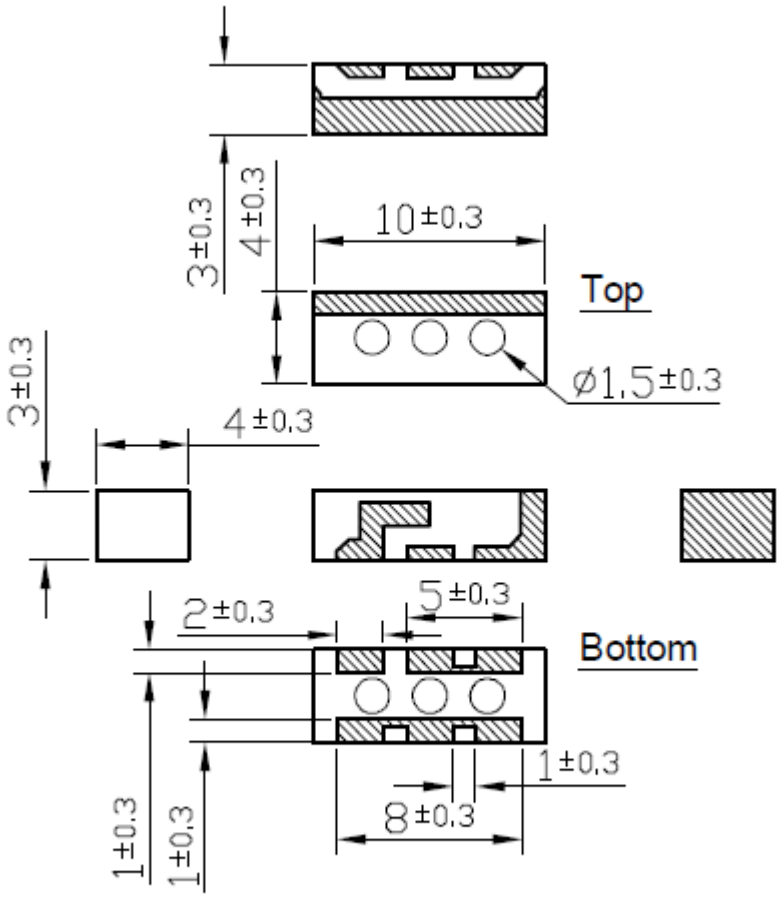

Note:

1. Silver
2. Copper
3. Solder Area
4. Ground Clearance Area

8.0 Recommended foot print for Evaluation Board

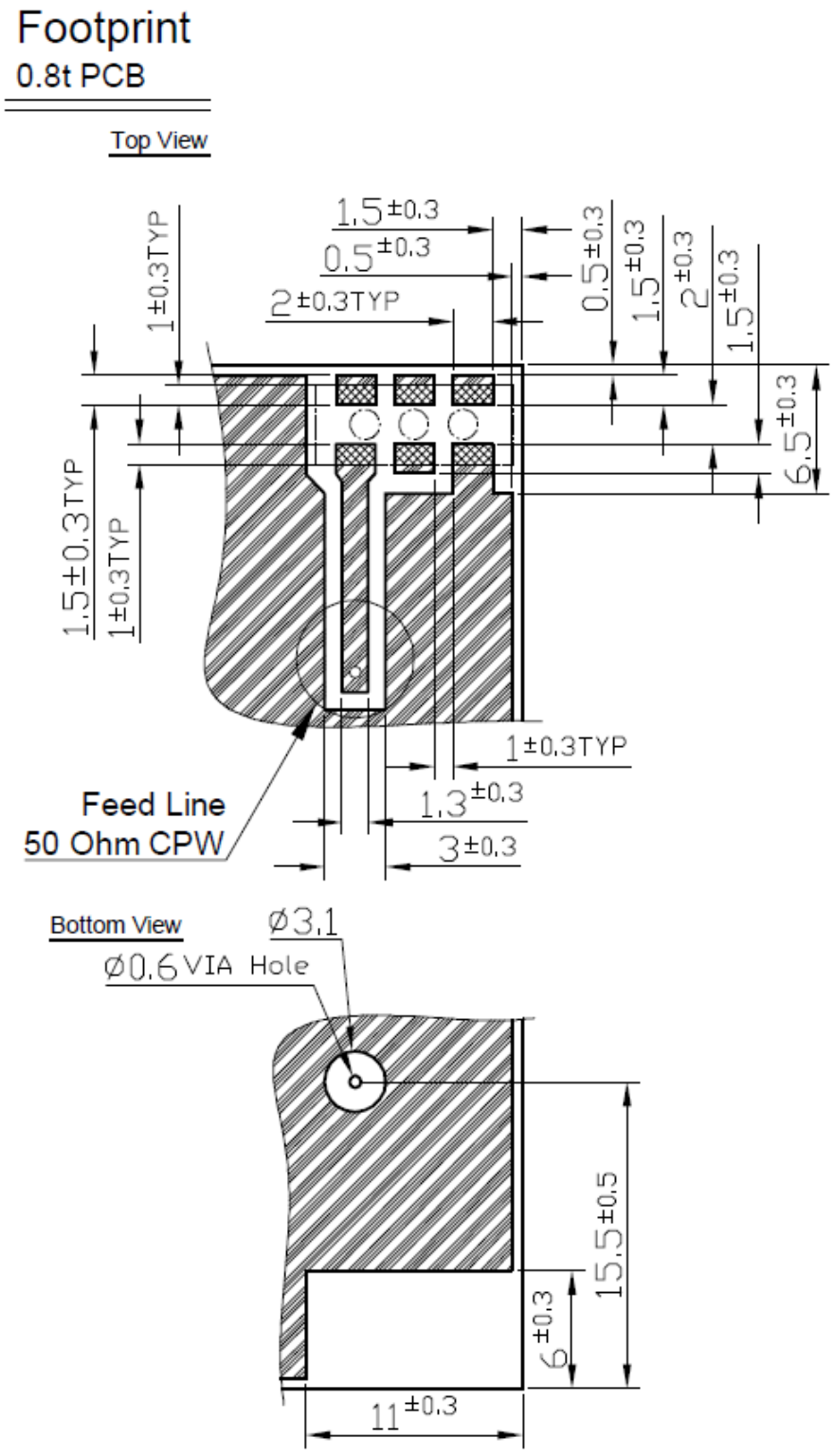

9.0 Delivery Mode

1 Blister tape to IEC 286-3，polyester
2 Pieces/tape：1000

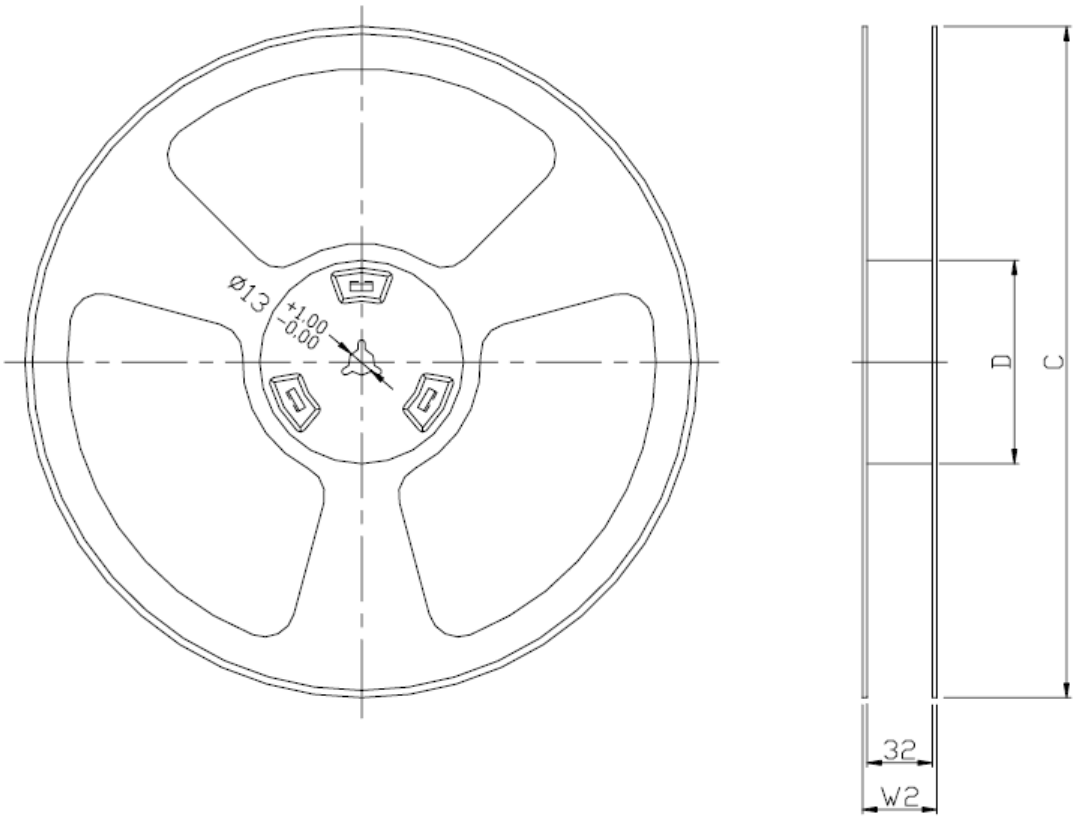

Product code	Units per Reel	C (mm)	D (mm)	W2 (mm)
PA.11	1000	330±1	62±0.5	24±1

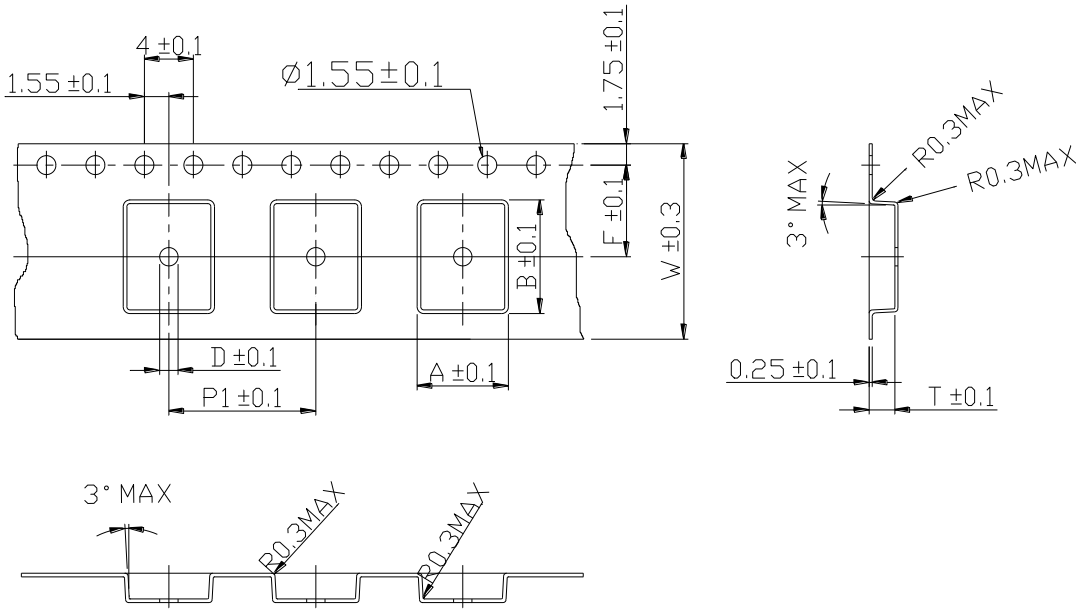

No	Index	Spec. (mm)
1	A	4.6
2	B	10.6
3	P1	12
4	W	24
5	F	8.5
6	T	3.5
7	D	1.5

10.0 Recommended Reflow Temperature Profile

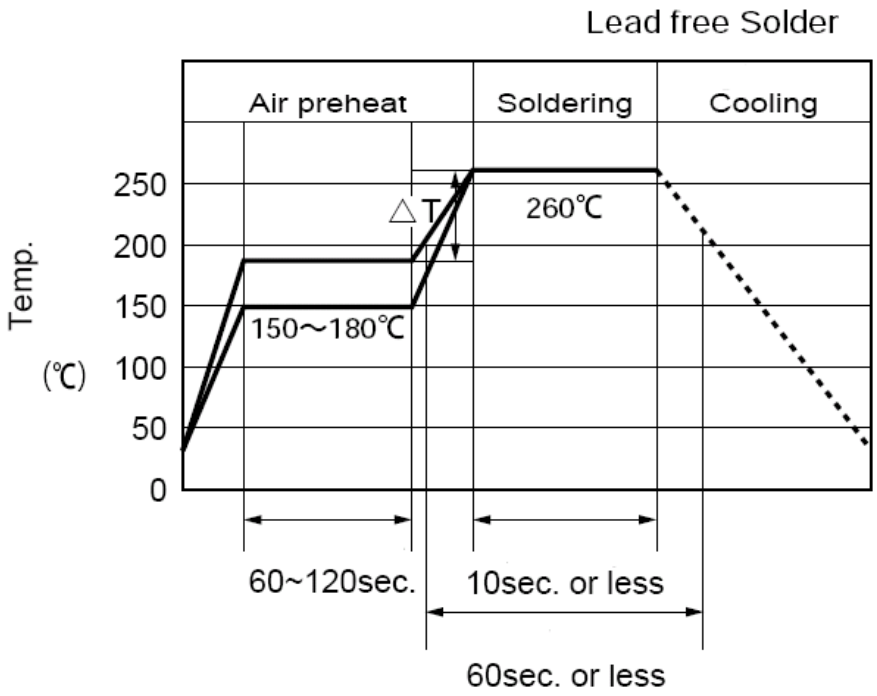

1. Time shown in the above figures is measured from the point when chip surface reaches temperature.
2. Temperature difference in high temperature part should be within 110°C.
3. After soldering, do not force cool, allow the parts to cool gradually.

*General attention to soldering:

●High soldering temperatures and long soldering times can cause leaching of the termination, decrease in adherence strength, and the change of characteristic may occur.

- For soldering, please refer to the soldering curves above. However, please keep exposure to temperatures exceeding 200°C to under 50 seconds.
- Please use a mild flux (containing less than 0.2wt% Cl). Also, if the flux is water soluble, be sure to wash thoroughly to remove any residue from the underside of components that could affect resistance.

Cleaning:

When using ultrasonic cleaning, the board may resonate if the output power is too high. Since this vibration can cause cracking or a decrease in the adherence of the termination, we recommend that you use the conditions below.

Frequency: 40kHz

Output Power: 20W/liter

Cleaning Time: 5 minutes max