P89LPC9301/931A1

8-bit microcontroller with accelerated two-clock 80C51 core 4 kB/8 kB 3 V byte-erasable flash

Rev. 01 — 9 April 2009 Preliminary data sheet

1. General description

The P89LPC9301/931A1 is a single-chip microcontroller, available in low cost packages, based on a high performance processor architecture that executes instructions in two to four clocks, six times the rate of standard 80C51 devices. Many system-level functions have been incorporated into the P89LPC9301/931A1 in order to reduce component count, board space, and system cost.

2. Features

2.1 Principal features

- 4 kB/8 kB byte-erasable flash code memory organized into 1 kB sectors and 64-byte pages. Single-byte erasing allows any byte(s) to be used as non-volatile data storage.
- 256-byte RAM data memory.
- Two analog comparators with selectable inputs and reference source.
- Two 16-bit counter/timers (each may be configured to toggle a port output upon timer overflow or to become a PWM output).
- A 23-bit system timer that can also be used as real-time clock consisting of a 7-bit prescaler and a programmable and readable 16-bit timer.
- Enhanced UART with a fractional baud rate generator, break detect, framing error detection, and automatic address detection; 400 kHz byte-wide I^2C-bus communication port and SPI communication port.
- 2.4 V to 3.6 V V_{DD} operating range. I/O pins are 5 V tolerant (may be pulled up or driven to 5.5 V).
- Enhanced low voltage (brownout) detect allows a graceful system shutdown when power fails.
- 28-pin TSSOP and PLCC packages with 23 I/O pins minimum and up to 26 I/O pins while using on-chip oscillator and reset options.

2.2 Additional features

- A high performance 80C51 CPU provides instruction cycle times of 111 ns to 222 ns for all instructions except multiply and divide when executing at 18 MHz. This is six times the performance of the standard 80C51 running at the same clock frequency. A lower clock frequency for the same performance results in power savings and reduced EMI.
- Serial flash In-Circuit Programming (ICP) allows simple production coding with commercial EPROM programmers. Flash security bits prevent reading of sensitive application programs.

founded by Philips

- Serial flash In-System Programming (ISP) allows coding while the device is mounted in the end application.
- In-Application Programming (IAP) of the flash code memory. This allows changing the code in a running application.
- Watchdog timer with separate on-chip oscillator, nominal 400 kHz, calibrated to ±5 %, requiring no external components. The watchdog prescaler is selectable from eight values.
- High-accuracy internal RC oscillator option, with clock doubler option, allows operation without external oscillator components. The RC oscillator option is selectable and fine tunable.
- Switching on the fly among internal RC oscillator, watchdog oscillator, external clock source provides optimal support of minimal power active mode with fast switching to maximum performance.
- Idle and two different power-down reduced power modes. Improved wake-up from Power-down mode (a LOW interrupt input starts execution). Typical power-down current is 1 μA (total power-down with voltage comparators disabled).
- Active-LOW reset. On-chip power-on reset allows operation without external reset components. A software reset function is also available.
- Configurable on-chip oscillator with frequency range options selected by user programmed flash configuration bits. Oscillator options support frequencies from 20 kHz to the maximum operating frequency of 18 MHz.
- Oscillator fail detect. The watchdog timer has a separate fully on-chip oscillator allowing it to perform an oscillator fail detect function.
- Programmable port output configuration options: quasi-bidirectional, open drain, push-pull, input-only.
- High current sourcing/sinking (20 mA) on eight I/O pins (P0.3 to P0.7, P1.4, P1.6, P1.7). All other port pins have high sinking capability (20 mA). A maximum limit is specified for the entire chip.
- Port ‘input pattern match’ detect. Port 0 may generate an interrupt when the value of the pins match or do not match a programmable pattern.
- Controlled slew rate port outputs to reduce EMI. Outputs have approximately 10 ns minimum ramp times.
- Only power and ground connections are required to operate the P89LPC9301/931A1 when internal reset option is selected.
- Four interrupt priority levels.
- Eight keypad interrupt inputs, plus two additional external interrupt inputs.
- Schmitt trigger port inputs.
- Second data pointer.
- Emulation support.

© NXP B.V. 2009. All rights reserved.

3. Ordering information

Table 1. Ordering information

Type number	Package		
	Name	Description	Version
P89LPC9301FDH	TSSOP28	plastic thin shrink small outline package; 28 leads; body width 4.4 mm	SOT361-1
P89LPC931A1FDH	TSSOP28	plastic thin shrink small outline package; 28 leads; body width 4.4 mm	SOT361-1

3.1 Ordering options

Table 2. Ordering options

Type number	Flash memory	Temperature range	Frequency
P89LPC9301FDH	4 kB	–40 °C to +85 °C	0 MHz to 18 MHz
P89LPC931A1FDH	8 kB	–40 °C to +85 °C	0 MHz to 18 MHz

© NXP B.V. 2009. All rights reserved.

4. Block diagram

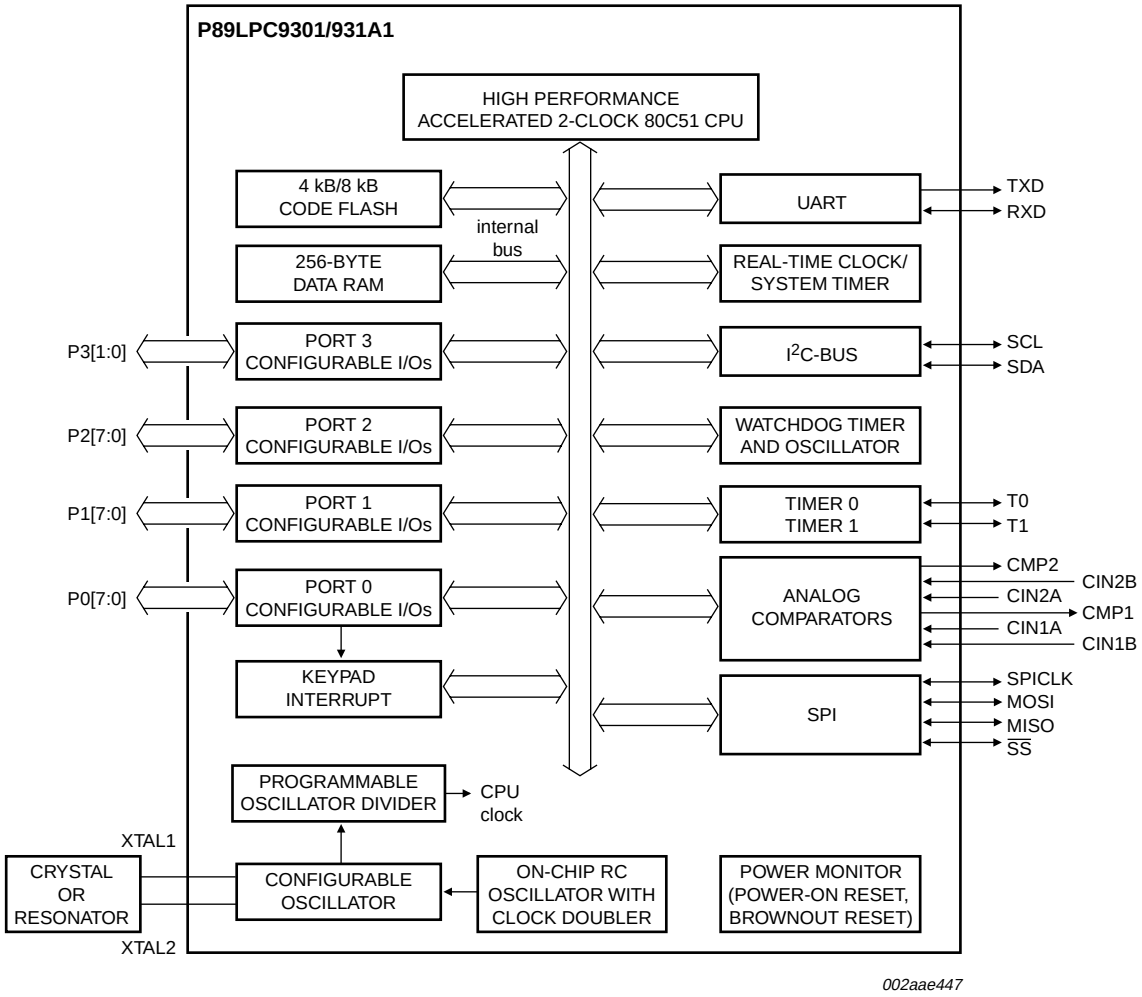

Fig 1. Block diagram

© NXP B.V. 2009. All rights reserved.

5. Functional diagram

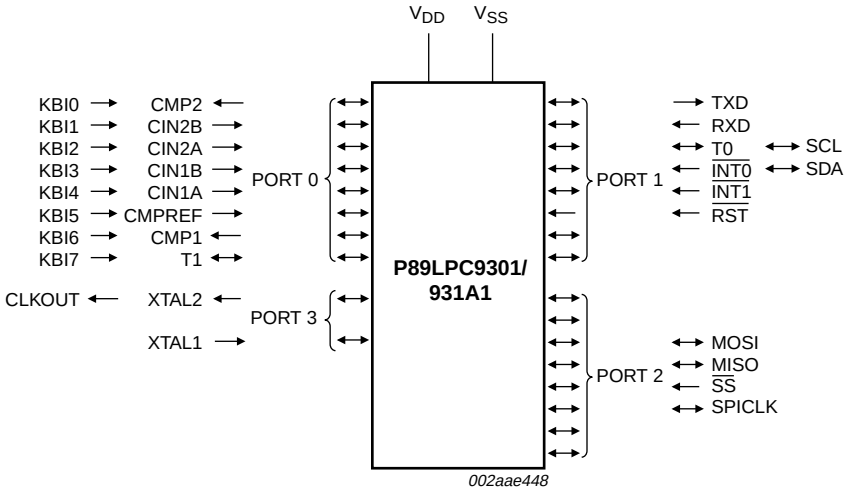

Fig 2. Functional diagram

© NXP B.V. 2009. All rights reserved.

6. Pinning information

6.1 Pinning

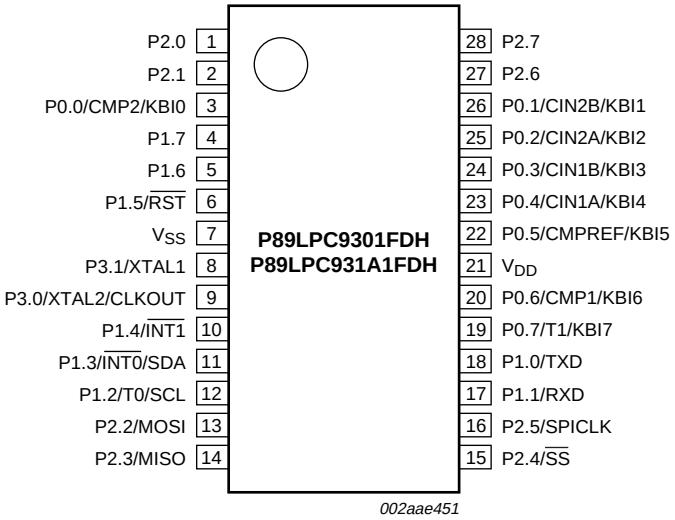

Fig 3. P89LPC9301/931A1 TSSOP28 pin configuration

© NXP B.V. 2009. All rights reserved.

6.2 Pin description

Table 3. Pin description

Symbol	Pin	Type	Description
P0.0 to P0.7		I/O	**Port 0:** Port 0 is an 8-bit I/O port with a user-configurable output type. During reset Port 0 latches are configured in the input only mode with the internal pull-up disabled. The operation of Port 0 pins as inputs and outputs depends upon the port configuration selected. Each port pin is configured independently. Refer to Section 7.16.1 “Port configurations” and Table 10 “Static characteristics” for details. The Keypad Interrupt feature operates with Port 0 pins. All pins have Schmitt trigger inputs. Port 0 also provides various special functions as described below:
P0.0/CMP2/ KBI0	3	I/O	**P0.0 —** Port 0 bit 0.
		O	**CMP2 —** Comparator 2 output
		I	**KBI0 —** Keyboard input 0.
P0.1/CIN2B/ KBI1	26	I/O	**P0.1 —** Port 0 bit 1.
		I	**CIN2B —** Comparator 2 positive input B.
		I	**KBI1 —** Keyboard input 1.
P0.2/CIN2A/ KBI2	25	I/O	**P0.2 —** Port 0 bit 2.
		I	**CIN2A —** Comparator 2 positive input A.
		I	**KBI2 —** Keyboard input 2.
P0.3/CIN1B/ KBI3	24	I/O	**P0.3 —** Port 0 bit 3. High current source.
		I	**CIN1B —** Comparator 1 positive input B.
		I	**KBI3 —** Keyboard input 3.
P0.4/CIN1A/ KBI4	23	I/O	**P0.4 —** Port 0 bit 4. High current source.
		I	**CIN1A —** Comparator 1 positive input A.
		I	**KBI4 —** Keyboard input 4.
P0.5/CMPREF/ KBI5	22	I/O	**P0.5 —** Port 0 bit 5. High current source.
		I	**CMPREF —** Comparator reference (negative) input.
		I	**KBI5 —** Keyboard input 5.

© NXP B.V. 2009. All rights reserved.

Table 3. Pin description *...continued*

Symbol	Pin	Type	Description
P0.6/CMP1/KBI6	20	I/O	**P0.6 —** Port 0 bit 6. High current source.
		O	**CMP1 —** Comparator 1 output.
		I	**KBI6 —** Keyboard input 6.
P0.7/T1/KBI7	19	I/O	**P0.7 —** Port 0 bit 7. High current source.
		I/O	**T1 —** Timer/counter 1 external count input or overflow output.
		I	**KBI7 —** Keyboard input 7.
P1.0 to P1.7		I/O, I [1]	**Port 1:** Port 1 is an 8-bit I/O port with a user-configurable output type, except for three pins as noted below. During reset Port 1 latches are configured in the input only mode with the internal pull-up disabled. The operation of the configurable Port 1 pins as inputs and outputs depends upon the port configuration selected. Each of the configurable port pins are programmed independently. Refer to Section 7.16.1 “Port configurations” and Table 10 “Static characteristics” for details. P1.2 to P1.3 are open drain when used as outputs. P1.5 is input only. All pins have Schmitt trigger inputs. Port 1 also provides various special functions as described below:
P1.0/TXD	18	I/O	**P1.0 —** Port 1 bit 0.
		O	**TXD —** Transmitter output for serial port.
P1.1/RXD	17	I/O	**P1.1 —** Port 1 bit 1.
		I	**RXD —** Receiver input for serial port.
P1.2/T0/SCL	12	I/O	**P1.2 —** Port 1 bit 2 (open-drain when used as output).
		I/O	**T0 —** Timer/counter 0 external count input or overflow output (open-drain when used as output).
		I/O	**SCL —** I^2C-bus serial clock input/output.
P1.3/$\overline{\text{INT0}}$/SDA	11	I/O	**P1.3 —** Port 1 bit 3 (open-drain when used as output).
		I	**$\overline{\text{INT0}}$ —** External interrupt 0 input.
		I/O	**SDA —** I^2C-bus serial data input/output.
P1.4/$\overline{\text{INT1}}$	10	I/O	**P1.4 —** Port 1 bit 4. High current source.
		I	**$\overline{\text{INT1}}$ —** External interrupt 1 input.
P1.5/$\overline{\text{RST}}$	6	I	**P1.5 —** Port 1 bit 5 (input only).
		I	**$\overline{\text{RST}}$ —** External Reset input during power-on or if selected via UCFG1. When functioning as a reset input, a LOW on this pin resets the microcontroller, causing I/O ports and peripherals to take on their default states, and the processor begins execution at address 0. Also used during a power-on sequence to force ISP mode.
P1.6	5	I/O	**P1.6 —** Port 1 bit 6. High current source.
P1.7	4	I/O	**P1.7 —** Port 1 bit 7. High current source.
P2.0 to P2.7		I/O	**Port 2:** Port 2 is an 8-bit I/O port with a user-configurable output type. During reset Port 2 latches are configured in the input only mode with the internal pull-up disabled. The operation of Port 2 pins as inputs and outputs depends upon the port configuration selected. Each port pin is configured independently. Refer to Section 7.16.1 “Port configurations” and Table 10 “Static characteristics” for details. All pins have Schmitt trigger inputs. Port 2 also provides various special functions as described below:
P2.0	1	I/O	**P2.0 —** Port 2 bit 0.
P2.1	2	I/O	**P2.1 —** Port 2 bit 1.

© NXP B.V. 2009. All rights reserved.

Table 3. Pin description *...continued*

Symbol	Pin	Type	Description
P2.2/MOSI	13	I/O	**P2.2 —** Port 2 bit 2.
		I/O	**MOSI —** SPI master out slave in. When configured as master, this pin is output; when configured as slave, this pin is input.
P2.3/MISO	14	I/O	**P2.3 —** Port 2 bit 3.
		I/O	**MISO —** When configured as master, this pin is input, when configured as slave, this pin is output.
P2.4/$\overline{SS}$	15	I/O	**P2.4 —** Port 2 bit 4.
		I	**$\overline{SS}$ —** SPI Slave select.
P2.5/SPICLK	16	I/O	**P2.5 —** Port 2 bit 5.
		I/O	**SPICLK —** SPI clock. When configured as master, this pin is output; when configured as slave, this pin is input.
P2.6	27	I/O	**P2.6 —** Port 2 bit 6.
P2.7	28	I/O	**P2.7 —** Port 2 bit 7.
P3.0 to P3.1		I/O	**Port 3:** Port 3 is a 2-bit I/O port with a user-configurable output type. During reset Port 3 latches are configured in the input only mode with the internal pull-up disabled. The operation of Port 3 pins as inputs and outputs depends upon the port configuration selected. Each port pin is configured independently. Refer to Section 7.16.1 “Port configurations” and Table 10 “Static characteristics” for details. All pins have Schmitt trigger inputs. Port 3 also provides various special functions as described below:
P3.0/XTAL2/ CLKOUT	9	I/O	**P3.0 —** Port 3 bit 0.
		O	**XTAL2 —** Output from the oscillator amplifier (when a crystal oscillator option is selected via the flash configuration.
		O	**CLKOUT —** CPU clock divided by 2 when enabled via SFR bit (ENCLK -TRIM.6). It can be used if the CPU clock is the internal RC oscillator, watchdog oscillator or external clock input, except when XTAL1/XTAL2 are used to generate clock source for the RTC/system timer.
P3.1/XTAL1	8	I/O	**P3.1 —** Port 3 bit 1.
		I	**XTAL1 —** Input to the oscillator circuit and internal clock generator circuits (when selected via the flash configuration). It can be a port pin if internal RC oscillator or watchdog oscillator is used as the CPU clock source, **and** if XTAL1/XTAL2 are not used to generate the clock for the RTC/system timer.
V_{SS}	7	I	**Ground:** 0 V reference.
V_{DD}	21	I	**Power supply:** This is the power supply voltage for normal operation as well as Idle and Power-down modes.

[1] Input/output for P1.0 to P1.4, P1.6, P1.7. Input for P1.5.

© NXP B.V. 2009. All rights reserved.

7. Functional description

Remark: Please refer to the *P89LPC9301/931A1 User manual* for a more detailed functional description.

7.1 Special function registers

Remark: SFR accesses are restricted in the following ways:

- User must **not** attempt to access any SFR locations not defined.
- Accesses to any defined SFR locations must be strictly for the functions for the SFRs.
- SFR bits labeled '-', '0' or '1' can **only** be written and read as follows:
  - '-' Unless otherwise specified, **must** be written with '0', but can return any value when read (even if it was written with '0'). It is a reserved bit and may be used in future derivatives.
  - '0' **must** be written with '0', and will return a '0' when read.
  - '1' **must** be written with '1', and will return a '1' when read.

© NXP B.V. 2009. All rights reserved.

Table 4. Special function registers

** indicates SFRs that are bit addressable.*

Name	Description	SFR addr.	Bit functions and addresses								Reset value	
			MSB							LSB	Hex	Binary
	Bit address		E7	E6	E5	E4	E3	E2	E1	E0		
ACC*	Accumulator	E0H									00	0000 0000
AUXR1	Auxiliary function register	A2H	CLKLP	EBRR	ENT1	ENT0	SRST	0	-	DPS	00	0000 00x0
	Bit address		F7	F6	F5	F4	F3	F2	F1	F0		
B*	B register	F0H									00	0000 0000
BRGR0[2]	Baud rate generator 0 rate low	BEH									00	0000 0000
BRGR1[2]	Baud rate generator 0 rate high	BFH									00	0000 0000
BRGCON	Baud rate generator 0 control	BDH	-	-	-	-	-	-	SBRGS	BRGEN	00[2]	xxxx xx00
CMP1	Comparator 1 control register	ACH	-	-	CE1	CP1	CN1	OE1	CO1	CMF1	00[1]	xx00 0000
CMP2	Comparator 2 control register	ADH	-	-	CE2	CP2	CN2	OE2	CO2	CMF2	00[1]	xx00 0000
DIVM	CPU clock divide-by-M control	95H									00	0000 0000
DPTR	Data pointer (2 bytes)											
DPH	Data pointer high	83H									00	0000 0000
DPL	Data pointer low	82H									00	0000 0000
FMADRH	Program flash address high	E7H									00	0000 0000
FMADRL	Program flash address low	E6H									00	0000 0000

© NXP B.V. 2009. All rights reserved.

Table 4. Special function registers *...continued*

** indicates SFRs that are bit addressable.*

Name	Description	SFR addr.	Bit functions and addresses								Reset value	
			MSB							LSB	Hex	Binary
FMCON	Program flash control (Read)	E4H	BUSY	-	-	-	HVA	HVE	SV	OI	70	0111 0000
	Program flash control (Write)	E4H	FMCMD.7	FMCMD.6	FMCMD.5	FMCMD.4	FMCMD.3	FMCMD.2	FMCMD.1	FMCMD.0		
FMDATA	Program flash data	E5H									00	0000 0000
I2ADR	I^2C-bus slave address register	DBH	I2ADR.6	I2ADR.5	I2ADR.4	I2ADR.3	I2ADR.2	I2ADR.1	I2ADR.0	GC	00	0000 0000
	Bit address		**DF**	**DE**	**DD**	**DC**	**DB**	**DA**	**D9**	**D8**		
I2CON*	I^2C-bus control register	D8H	-	I2EN	STA	STO	SI	AA	-	CRSEL	00	x000 00x0
I2DAT	I^2C-bus data register	DAH										
I2SCLH	Serial clock generator/SCL duty cycle register high	DDH									00	0000 0000
I2SCLL	Serial clock generator/SCL duty cycle register low	DCH									00	0000 0000
I2STAT	I^2C-bus status register	D9H	STA.4	STA.3	STA.2	STA.1	STA.0	0	0	0	F8	1111 1000
	Bit address		**AF**	**AE**	**AD**	**AC**	**AB**	**AA**	**A9**	**A8**		
IEN0*	Interrupt enable 0	A8H	EA	EWDRT	EBO	ES/ESR	ET1	EX1	ET0	EX0	00	0000 0000
	Bit address		**EF**	**EE**	**ED**	**EC**	**EB**	**EA**	**E9**	**E8**		
IEN1*	Interrupt enable 1	E8H	-	EST	-	-	ESPI	EC	EKBI	EI2C	00[1]	00x0 0000
	Bit address		**BF**	**BE**	**BD**	**BC**	**BB**	**BA**	**B9**	**B8**		
IP0*	Interrupt priority 0	B8H	-	PWDRT	PBO	PS/PSR	PT1	PX1	PT0	PX0	00[1]	x000 0000

P89LPC9301_931A1_1

© NXP B.V. 2009. All rights reserved.

Table 4. Special function registers *...continued*

** indicates SFRs that are bit addressable.*

Name	Description	SFR addr.	Bit functions and addresses								Reset value	
			MSB							LSB	Hex	Binary
IP0H	Interrupt priority 0 high	B7H	-	PWDRTH	PBOH	PSH/ PSRH	PT1H	PX1H	PT0H	PX0H	00[1]	x000 0000
	Bit address		**FF**	**FE**	**FD**	**FC**	**FB**	**FA**	**F9**	**F8**		
IP1*	Interrupt priority 1	F8H	-	PST	-	-	PSPI	PC	PKBI	PI2C	00[1]	00x0 0000
IP1H	Interrupt priority 1 high	F7H	-	PSTH	-	-	PSPIH	PCH	PKBIH	PI2CH	00[1]	00x0 0000
KBCON	Keypad control register	94H	-	-	-	-	-	-	PATN _SEL	KBIF	00[1]	xxxx xx00
KBMASK	Keypad interrupt mask register	86H									00	0000 0000
KBPATN	Keypad pattern register	93H									FF	1111 1111
	Bit address		**87**	**86**	**85**	**84**	**83**	**82**	**81**	**80**		
P0*	Port 0	80H	T1/KB7	CMP1 /KB6	CMPREF /KB5	CIN1A /KB4	CIN1B /KB3	CIN2A /KB2	CIN2B /KB1	CMP2 /KB0	[1]	
	Bit address		**97**	**96**	**95**	**94**	**93**	**92**	**91**	**90**		
P1*	Port 1	90H	-	-	$\overline{\text{RST}}$	$\overline{\text{INT1}}$	$\overline{\text{INT0}}$/SDA	T0/SCL	RXD	TXD	[1]	
	Bit address		**A7**	**A6**	**A5**	**A4**	**A3**	**A2**	**A1**	**A0**		
P2*	Port 2	A0H	-	-	SPICLK	$\overline{\text{SS}}$	MISO	MOSI	-	-	[1]	
	Bit address		**B7**	**B6**	**B5**	**B4**	**B3**	**B2**	**B1**	**B0**		
P3*	Port 3	B0H	-	-	-	-	-	-	XTAL1	XTAL2	[1]	
P0M1	Port 0 output mode 1	84H	(P0M1.7)	(P0M1.6)	(P0M1.5)	(P0M1.4)	(P0M1.3)	(P0M1.2)	(P0M1.1)	(P0M1.0)	FF[1]	1111 1111
P0M2	Port 0 output mode 2	85H	(P0M2.7)	(P0M2.6)	(P0M2.5)	(P0M2.4)	(P0M2.3)	(P0M2.2)	(P0M2.1)	(P0M2.0)	00[1]	0000 0000
P1M1	Port 1 output mode 1	91H	(P1M1.7)	(P1M1.6)	-	(P1M1.4)	(P1M1.3)	(P1M1.2)	(P1M1.1)	(P1M1.0)	D3[1]	11x1 xx11
P1M2	Port 1 output mode 2	92H	(P1M2.7)	(P1M2.6)	-	(P1M2.4)	(P1M2.3)	(P1M2.2)	(P1M2.1)	(P1M2.0)	00[1]	00x0 xx00

© NXP B.V. 2009. All rights reserved.

Table 4. Special function registers *...continued*

** indicates SFRs that are bit addressable.*

Name	Description	SFR addr.	Bit functions and addresses								Reset value	
			MSB							LSB	Hex	Binary
P2M1	Port 2 output mode 1	A4H	(P2M1.7)	(P2M1.6)	(P2M1.5)	(P2M1.4)	(P2M1.3)	(P2M1.2)	(P2M1.1)	(P2M1.0)	FF[1]	1111 1111
P2M2	Port 2 output mode 2	A5H	(P2M2.7)	(P2M2.6)	(P2M2.5)	(P2M2.4)	(P2M2.3)	(P2M2.2)	(P2M2.1)	(P2M2.0)	00[1]	0000 0000
P3M1	Port 3 output mode 1	B1H	-	-	-	-	-	-	(P3M1.1)	(P3M1.0)	03[1]	xxxx xx11
P3M2	Port 3 output mode 2	B2H	-	-	-	-	-	-	(P3M2.1)	(P3M2.0)	00[1]	xxxx xx00
PCON	Power control register	87H	SMOD1	SMOD0	-	BOI	GF1	GF0	PMOD1	PMOD0	00	0000 0000
PCONA	Power control register A	B5H	RTCPD	-	VCPD	-	I2PD	SPPD	SPD	-	00[1]	0000 0000
	Bit address		**D7**	**D6**	**D5**	**D4**	**D3**	**D2**	**D1**	**D0**		
PSW*	Program status word	D0H	CY	AC	F0	RS1	RS0	OV	F1	P	00	0000 0000
PT0AD	Port 0 digital input disable	F6H	-	-	PT0AD.5	PT0AD.4	PT0AD.3	PT0AD.2	PT0AD.1	-	00	xx00 000x
RSTSRC	Reset source register	DFH	-	BOIF	BOF	POF	R_BK	R_WD	R_SF	R_EX	[3]	
RTCCON	RTC control	D1H	RTCF	RTCS1	RTCS0	-	-	-	ERTC	RTCEN	60[1][6]	011x xx00
RTCH	RTC register high	D2H									00[6]	0000 0000
RTCL	RTC register low	D3H									00[6]	0000 0000
SADDR	Serial port address register	A9H									00	0000 0000
SADEN	Serial port address enable	B9H									00	0000 0000
SBUF	Serial Port data buffer register	99H									xx	xxxx xxxx
	Bit address		**9F**	**9E**	**9D**	**9C**	**9B**	**9A**	**99**	**98**		

© NXP B.V. 2009. All rights reserved.

Table 4. Special function registers *...continued*

** indicates SFRs that are bit addressable.*

Name	Description	SFR addr.	Bit functions and addresses								Reset value	
			MSB							LSB	Hex	Binary
SCON*	Serial port control	98H	SM0/FE	SM1	SM2	REN	TB8	RB8	TI	RI	00	0000 0000
SSTAT	Serial port extended status register	BAH	DBMOD	INTLO	CIDIS	DBISEL	FE	BR	OE	STINT	00	0000 0000
SP	Stack pointer	81H									07	0000 0111
SPCTL	SPI control register	E2H	SSIG	SPEN	DORD	MSTR	CPOL	CPHA	SPR1	SPR0	04	0000 0100
SPSTAT	SPI status register	E1H	SPIF	WCOL	-	-	-	-	-	-	00	00xx xxxx
SPDAT	SPI data register	E3H									00	0000 0000
TAMOD	Timer 0 and 1 auxiliary mode	8FH	-	-	-	T1M2	-	-	-	T0M2	00	xxx0 xxx0
	Bit address		**8F**	**8E**	**8D**	**8C**	**8B**	**8A**	**89**	**88**		
TCON*	Timer 0 and 1 control	88H	TF1	TR1	TF0	TR0	IE1	IT1	IE0	IT0	00	0000 0000
TH0	Timer 0 high	8CH									00	0000 0000
TH1	Timer 1 high	8DH									00	0000 0000
TL0	Timer 0 low	8AH									00	0000 0000
TL1	Timer 1 low	8BH									00	0000 0000
TMOD	Timer 0 and 1 mode	89H	T1GATE	T1C/T	T1M1	T1M0	T0GATE	T0C/T	T0M1	T0M0	00	0000 0000
TRIM	Internal oscillator trim register	96H	RCCLK	ENCLK	TRIM.5	TRIM.4	TRIM.3	TRIM.2	TRIM.1	TRIM.0	[5][6]	
WDCON	Watchdog control register	A7H	PRE2	PRE1	PRE0	-	-	WDRUN	WDTOF	WDCLK	[4][6]	
WDL	Watchdog load	C1H									FF	1111 1111
WFEED1	Watchdog feed 1	C2H										
WFEED2	Watchdog feed 2	C3H										

© NXP B.V. 2009. All rights reserved.

[1] All ports are in input only (high-impedance) state after power-up.

[2] BRGR1 and BRGR0 must only be written if BRGEN in BRGCON SFR is logic 0. If any are written while BRGEN = 1, the result is unpredictable.

[3] The RSTSRC register reflects the cause of the P89LPC9301/931A1 reset except BOIF bit. Upon a power-up reset, all reset source flags are cleared except POF and BOF; the power-on reset value is x011 0000.

[4] After reset, the value is 1110 01x1, i.e., PRE2 to PRE0 are all logic 1, WDRUN = 1 and WDCLK = 1. WDTOF bit is logic 1 after watchdog reset and is logic 0 after power-on reset. Other resets will not affect WDTOF.

[5] On power-on reset and watchdog reset, the TRIM SFR is initialized with a factory preprogrammed value. Other resets will not cause initialization of the TRIM register.

[6] The only reset sources that affect these SFRs are power-on reset and watchdog reset.

© NXP B.V. 2009. All rights reserved.

Table 5. Extended special function registers[1]

Name	Description	SFR addr.	Bit functions and addresses								Reset value	
			MSB							LSB	Hex	Binary
BODCFG	BOD configuration register	FFC8H	-	-	-	-	-	-	BOICFG1	BOICFG0	[2]	
CLKCON	CLOCK Control register	FFDEH	CLKOK	-	-	XTALWD	CLKDBL	FOSC2	FOSC1	FOSC0	[3]	
RTCDATH	Real-time clock data register high	FFBFH									00	0000 0000
RTCDATL	Real-time clock data register low	FFBEH									00	0000 0000

[1] Extended SFRs are physically located on-chip but logically located in external data memory address space (XDATA). The MOVX A,@DPTR and MOVX @DPTR,A instructions are used to access these extended SFRs.

[2] The BOICFG1/0 will be copied from UCFG1.5 and UCFG1.3 when power-on reset.

[3] CLKCON register reset value comes from UCFG1 and UCFG2. The reset value of CLKCON.2 to CLKCON.0 come from UCFG1.2 to UCFG1.0 and reset value of CLKDBL bit comes from UCFG2.7.

© NXP B.V. 2009. All rights reserved.

7.2 Enhanced CPU

The P89LPC9301/931A1 uses an enhanced 80C51 CPU which runs at six times the speed of standard 80C51 devices. A machine cycle consists of two CPU clock cycles, and most instructions execute in one or two machine cycles.

7.3 Clocks

7.3.1 Clock definitions

The P89LPC9301/931A1 device has several internal clocks as defined below:

OSCCLK — Input to the DIVM clock divider. OSCCLK is selected from one of four clock sources (see Figure 4) and can also be optionally divided to a slower frequency (see Section 7.11 “CCLK modification: DIVM register”).

Remark: f_{osc} is defined as the OSCCLK frequency.

CCLK — CPU clock; output of the clock divider. There are two CCLK cycles per machine cycle, and most instructions are executed in one to two machine cycles (two or four CCLK cycles).

RCCLK — The internal 7.373 MHz RC oscillator output. The clock doubler option, when enabled, provides an output frequency of 14.746 MHz.

PCLK — Clock for the various peripheral devices and is $^{CCLK}/_{2}$.

7.3.2 CPU clock (OSCCLK)

The P89LPC9301/931A1 provides several user-selectable oscillator options in generating the CPU clock. This allows optimization for a range of needs from high precision to lowest possible cost. These options are configured when the flash is programmed and include an on-chip watchdog oscillator, an on-chip RC oscillator, an oscillator using an external crystal, or an external clock source.

7.4 Crystal oscillator option

The crystal oscillator can be optimized for low, medium, or high frequency crystals covering a range from 20 kHz to 18 MHz. It can be the clock source of OSCCLK, RTC and WDT.

7.4.1 Low speed oscillator option

This option supports an external crystal in the range of 20 kHz to 100 kHz. Ceramic resonators are also supported in this configuration.

7.4.2 Medium speed oscillator option

This option supports an external crystal in the range of 100 kHz to 4 MHz. Ceramic resonators are also supported in this configuration.

7.4.3 High speed oscillator option

This option supports an external crystal in the range of 4 MHz to 18 MHz. Ceramic resonators are also supported in this configuration.

© NXP B.V. 2009. All rights reserved.

7.5 Clock output

The P89LPC9301/931A1 supports a user-selectable clock output function on the P3.0/XTAL2/CLKOUT pin when crystal oscillator is not being used. This condition occurs if another clock source has been selected (on-chip RC oscillator, watchdog oscillator, external clock input on XTAL1) and if the RTC and WDT are not using the crystal oscillator as their clock source. This allows external devices to synchronize to the P89LPC9301/931A1. This output is enabled by the ENCLK bit in the TRIM register.

The frequency of this clock output is ½ that of the CCLK. If the clock output is not needed in Idle mode, it may be turned off prior to entering Idle, saving additional power.

7.6 On-chip RC oscillator option

The P89LPC9301/931A1 has a 6-bit TRIM register that can be used to tune the frequency of the RC oscillator. During reset, the TRIM value is initialized to a factory preprogrammed value to adjust the oscillator frequency to 7.373 MHz ± 1 % at room temperature. End-user applications can write to the TRIM register to adjust the on-chip RC oscillator to other frequencies. When the clock doubler option is enabled (UCFG2.7 = 1), the output frequency is 14.746 MHz. If CCLK is 8 MHz or slower, the CLKLP SFR bit (AUXR1.7) can be set to logic 1 to reduce power consumption. On reset, CLKLP is logic 0 allowing highest performance access. This bit can then be set in software if CCLK is running at 8 MHz or slower. When clock doubler option is enabled, BOE1 bit (UCFG1.5) and BOE0 bit (UCFG1.3) are required to hold the device in reset at power-up until V_{DD} has reached its specified level.

7.7 Watchdog oscillator option

The watchdog has a separate oscillator which has a frequency of 400 kHz, calibrated to ± 5 % at room temperature. This oscillator can be used to save power when a high clock frequency is not needed.

7.8 External clock input option

In this configuration, the processor clock is derived from an external source driving the P3.1/XTAL1 pin. The rate may be from 0 Hz up to 18 MHz. The P3.0/XTAL2/CLKOUT pin may be used as a standard port pin or a clock output. When using an oscillator frequency above 12 MHz, BOE1 bit (UCFG1.5) and BOE0 bit (UCFG1.3) are required to hold the device in reset at power-up until V_{DD} has reached its specified level.

7.9 Clock sources switch on the fly

P89LPC9301/931A1 can implement clock source switch in any sources of watchdog oscillator, 7 MHz/14 MHz internal RC oscillator, external clock source (external crystal or external clock input) during code is running. CLKOK bit in CLKCON register is used to indicate the clock switch status. CLKOK is cleared when starting clock source switch and set when completed. Notice that when CLKOK is ‘0’, writing to CLKCON register is not allowed.

© NXP B.V. 2009. All rights reserved.

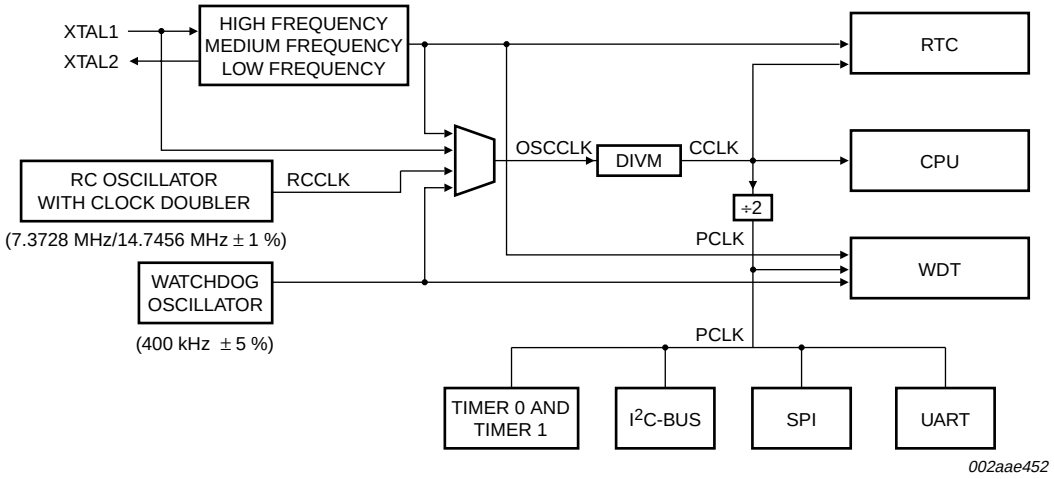

Fig 4. Block diagram of oscillator control

7.10 CCLK wake-up delay

The P89LPC9301/931A1 has an internal wake-up timer that delays the clock until it stabilizes depending on the clock source used. If the clock source is any of the three crystal selections (low, medium and high frequencies) the delay is 1024 OSCCLK cycles plus 60 μs to 100 μs. If the clock source is the internal RC oscillator, the delay is 200 μs to 300 μs. If the clock source is watchdog oscillator or external clock, the delay is 32 OSCCLK cycles.

7.11 CCLK modification: DIVM register

The OSCCLK frequency can be divided down up to 510 times by configuring a dividing register, DIVM, to generate CCLK. This feature makes it possible to temporarily run the CPU at a lower rate, reducing power consumption. By dividing the clock, the CPU can retain the ability to respond to events that would not exit Idle mode by executing its normal program at a lower rate. This can also allow bypassing the oscillator start-up time in cases where Power-down mode would otherwise be used. The value of DIVM may be changed by the program at any time without interrupting code execution.

7.12 Low power select

The P89LPC9301/931A1 is designed to run at 18 MHz (CCLK) maximum. However, if CCLK is 8 MHz or slower, the CLKLP SFR bit (AUXR1.7) can be set to logic 1 to lower the power consumption further. On any reset, CLKLP is logic 0 allowing highest performance access. This bit can then be set in software if CCLK is running at 8 MHz or slower.

© NXP B.V. 2009. All rights reserved.

7.13 Memory organization

The various P89LPC9301/931A1 memory spaces are as follows:

- DATA

  128 bytes of internal data memory space (00H:7FH) accessed via direct or indirect addressing, using instructions other than MOVX and MOVC. All or part of the Stack may be in this area.

- IDATA

  Indirect Data. 256 bytes of internal data memory space (00H:FFH) accessed via indirect addressing using instructions other than MOVX and MOVC. All or part of the Stack may be in this area. This area includes the DATA area and the 128 bytes immediately above it.

- SFR

  Special Function Registers. Selected CPU registers and peripheral control and status registers, accessible only via direct addressing.

- CODE

  64 kB of Code memory space, accessed as part of program execution and via the MOVC instruction. The P89LPC9301/931A1 has 4 kB/8 kB of on-chip Code memory.

7.14 Data RAM arrangement

The 256 bytes of on-chip RAM are organized as shown in Table 6.

Table 6. On-chip data memory usages

Type	Data RAM	Size (bytes)
DATA	Memory that can be addressed directly and indirectly	128
IDATA	Memory that can be addressed indirectly	256

7.15 Interrupts

The P89LPC9301/931A1 uses a four priority level interrupt structure. This allows great flexibility in controlling the handling of the many interrupt sources. The P89LPC9301/931A1 supports 13 interrupt sources: external interrupts 0 and 1, timers 0 and 1, serial port TX, serial port RX, combined serial port RX/TX, brownout detect, watchdog/RTC, I^2C-bus, keyboard, comparators 1 and 2, SPI.

Each interrupt source can be individually enabled or disabled by setting or clearing a bit in the interrupt enable registers IEN0 or IEN1. The IEN0 register also contains a global disable bit, EA, which disables all interrupts.

Each interrupt source can be individually programmed to one of four priority levels by setting or clearing bits in the interrupt priority registers IP0, IP0H, IP1 and IP1H. An interrupt service routine in progress can be interrupted by a higher priority interrupt, but not by another interrupt of the same or lower priority. The highest priority interrupt service cannot be interrupted by any other interrupt source. If two requests of different priority levels are pending at the start of an instruction, the request of higher priority level is serviced.

© NXP B.V. 2009. All rights reserved.

If requests of the same priority level are pending at the start of an instruction, an internal polling sequence determines which request is serviced. This is called the arbitration ranking. Note that the arbitration ranking is only used to resolve pending requests of the same priority level.

7.15.1 External interrupt inputs

The P89LPC9301/931A1 has two external interrupt inputs as well as the Keypad Interrupt function. The two interrupt inputs are identical to those present on the standard 80C51 microcontrollers.

These external interrupts can be programmed to be level-triggered or edge-triggered by setting or clearing bit IT1 or IT0 in Register TCON.

In edge-triggered mode, if successive samples of the $\overline{\text{INTn}}$ pin show a HIGH in one cycle and a LOW in the next cycle, the interrupt request flag IEn in TCON is set, causing an interrupt request.

If an external interrupt is enabled when the P89LPC9301/931A1 is put into Power-down or Idle mode, the interrupt will cause the processor to wake-up and resume operation. Refer to Section 7.18 “Power reduction modes” for details.

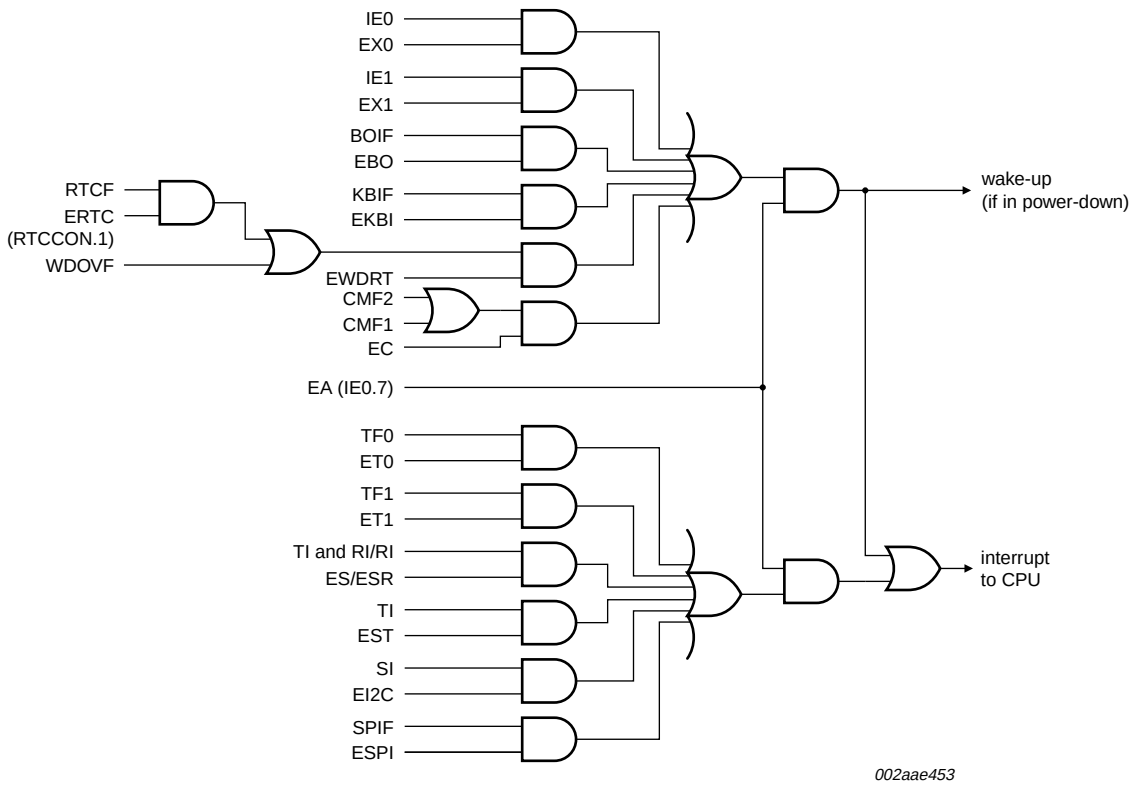

Fig 5. Interrupt sources, interrupt enables, and power-down wake-up sources

© NXP B.V. 2009. All rights reserved.

7.16 I/O ports

The P89LPC9301/931A1 has four I/O ports: Port 0, Port 1, Port 2 and Port 3. Ports 0, 1, and 2 are 8-bit ports, and Port 3 is a 2-bit port. The exact number of I/O pins available depends upon the clock and reset options chosen, as shown in Table 7.

Table 7. Number of I/O pins available

Clock source	Reset option	Number of I/O pins (28-pin package)
On-chip oscillator or watchdog oscillator	No external reset (except during power-up)	26
	External $\overline{\text{RST}}$ pin supported	25
External clock input	No external reset (except during power-up)	25
	External $\overline{\text{RST}}$ pin supported	24
Low/medium/high speed oscillator (external crystal or resonator)	No external reset (except during power-up)	24
	External $\overline{\text{RST}}$ pin supported	23

7.16.1 Port configurations

All but three I/O port pins on the P89LPC9301/931A1 may be configured by software to one of four types on a bit-by-bit basis. These are: quasi-bidirectional (standard 80C51 port outputs), push-pull, open drain, and input-only. Two configuration registers for each port select the output type for each port pin.

1. P1.5 ($\overline{\text{RST}}$) can only be an input and cannot be configured.
2. P1.2 (SCL/T0) and P1.3 (SDA/$\overline{\text{INT0}}$) may only be configured to be either input-only or open-drain.

7.16.1.1 Quasi-bidirectional output configuration

Quasi-bidirectional output type can be used as both an input and output without the need to reconfigure the port. This is possible because when the port outputs a logic HIGH, it is weakly driven, allowing an external device to pull the pin LOW. When the pin is driven LOW, it is driven strongly and able to sink a fairly large current. These features are somewhat similar to an open-drain output except that there are three pull-up transistors in the quasi-bidirectional output that serve different purposes.

The P89LPC9301/931A1 is a 3 V device, but the pins are 5 V-tolerant. In quasi-bidirectional mode, if a user applies 5 V on the pin, there will be a current flowing from the pin to V_{DD}, causing extra power consumption. Therefore, applying 5 V in quasi-bidirectional mode is discouraged.

A quasi-bidirectional port pin has a Schmitt trigger input that also has a glitch suppression circuit.

7.16.1.2 Open-drain output configuration

The open-drain output configuration turns off all pull-ups and only drives the pull-down transistor of the port driver when the port latch contains a logic 0. To be used as a logic output, a port configured in this manner must have an external pull-up, typically a resistor tied to V_{DD}.

© NXP B.V. 2009. All rights reserved.

An open-drain port pin has a Schmitt trigger input that also has a glitch suppression circuit.

7.16.1.3 Input-only configuration

The input-only port configuration has no output drivers. It is a Schmitt trigger input that also has a glitch suppression circuit.

7.16.1.4 Push-pull output configuration

The push-pull output configuration has the same pull-down structure as both the open-drain and the quasi-bidirectional output modes, but provides a continuous strong pull-up when the port latch contains a logic 1. The push-pull mode may be used when more source current is needed from a port output. A push-pull port pin has a Schmitt triggered input that also has a glitch suppression circuit. The P89LPC9301/931A1 device has high current source on eight pins in push-pull mode. See Table 9 “Limiting values”.

7.16.2 Port 0 analog functions

The P89LPC9301/931A1 incorporates two Analog Comparators. In order to give the best analog function performance and to minimize power consumption, pins that are being used for analog functions must have the digital outputs and digital inputs disabled.

Digital outputs are disabled by putting the port output into the Input-Only (high-impedance) mode.

Digital inputs on Port 0 may be disabled through the use of the PT0AD register, bits 1:5. On any reset, PT0AD[1:5] defaults to logic 0s to enable digital functions.

7.16.3 Additional port features

After power-up, all pins are in Input-Only mode. **Please note that this is different from the LPC76x series of devices.**

- After power-up, all I/O pins except P1.5, may be configured by software.
- Pin P1.5 is input only. Pins P1.2 and P1.3 are configurable for either input-only or open-drain.

Every output on the P89LPC9301/931A1 has been designed to sink typical LED drive current. However, there is a maximum total output current for all ports which must not be exceeded. Please refer to Table 10 “Static characteristics” for detailed specifications.

All ports pins that can function as an output have slew rate controlled outputs to limit noise generated by quickly switching output signals. The slew rate is factory-set to approximately 10 ns rise and fall times.

7.17 Power monitoring functions

The P89LPC9301/931A1 incorporates power monitoring functions designed to prevent incorrect operation during initial power-up and power loss or reduction during operation. This is accomplished with two hardware functions: Power-on detect and brownout detect.

© NXP B.V. 2009. All rights reserved.

7.17.1 Brownout detection

The brownout detect function determines if the power supply voltage drops below a certain level. Enhanced brownout detection has 3 independent functions: BOD reset, BOD interrupt and BOD FLASH.

BOD reset is always on except in total Power-down mode. It could not be disabled in software. BOD interrupt may be enabled or disabled in software. BOD FLASH is always on, except in Power-down modes and could not be disabled in software.

BOD reset and BOD interrupt, each has four trip voltage levels. BOE1 bit (UCFG1.5) and BOE0 bit (UCFG1.3) are used as trip point configuration bits of BOD reset. BOICFG1 bit and BOICFG0 bit in register BODCFG are used as trip point configuration bits of BOD interrupt. BOD reset voltage should be lower than BOD interrupt trip point. BOD FLASH is used for flash programming/erase protection and has only 1 trip voltage of 2.4 V. Please refer to *P89LPC9301/931A1 User manual* for detail configurations.

If brownout detection is enabled the brownout condition occurs when V_{DD} falls below the brownout trip voltage and is negated when V_{DD} rises above the brownout trip voltage.

For correct activation of brownout detect, the V_{DD} rise and fall times must be observed. Please see Table 10 “Static characteristics” for specifications.

7.17.2 Power-on detection

The Power-on detect has a function similar to the brownout detect, but is designed to work as power comes up initially, before the power supply voltage reaches a level where brownout detect can work. The POF flag in the RSTSRC register is set to indicate an initial power-up condition. The POF flag will remain set until cleared by software.

7.18 Power reduction modes

The P89LPC9301/931A1 supports three different power reduction modes. These modes are Idle mode, Power-down mode, and total Power-down mode.

7.18.1 Idle mode

Idle mode leaves peripherals running in order to allow them to activate the processor when an interrupt is generated. Any enabled interrupt source or reset may terminate Idle mode.

7.18.2 Power-down mode

The Power-down mode stops the oscillator in order to minimize power consumption. The P89LPC9301/931A1 exits Power-down mode via any reset, or certain interrupts. In Power-down mode, the power supply voltage may be reduced to the data retention supply voltage V_{DDR}. This retains the RAM contents at the point where Power-down mode was entered. SFR contents are not guaranteed after V_{DD} has been lowered to V_{DDR}, therefore it is highly recommended to wake-up the processor via reset in this case. V_{DD} must be raised to within the operating range before the Power-down mode is exited.

Some chip functions continue to operate and draw power during Power-down mode, increasing the total power used during power-down. These include: Brownout detect, watchdog timer, comparators (note that comparators can be powered down separately), and RTC/system timer. The internal RC oscillator is disabled unless both the RC oscillator has been selected as the system clock and the RTC is enabled.

© NXP B.V. 2009. All rights reserved.

7.18.3 Total Power-down mode

This is the same as Power-down mode except that the brownout detection circuitry and the voltage comparators are also disabled to conserve additional power. The internal RC oscillator is disabled unless both the RC oscillator has been selected as the system clock **and** the RTC is enabled. If the internal RC oscillator is used to clock the RTC during power-down, there will be high power consumption. Please use an external low frequency clock to achieve low power with the RTC running during power-down.

7.19 Reset

The P1.5/$\overline{\text{RST}}$ pin can function as either a LOW-active reset input or as a digital input, P1.5. The Reset Pin Enable (RPE) bit in UCFG1, when set to logic 1, enables the external reset input function on P1.5. When cleared, P1.5 may be used as an input pin.

Remark: During a power-up sequence, the RPE selection is overridden and this pin always functions as a reset input. **An external circuit connected to this pin should not hold this pin LOW during a power-on sequence as this will keep the device in reset.** After power-up this pin will function as defined by the RPE bit. Only a power-up reset will temporarily override the selection defined by RPE bit. Other sources of reset will not override the RPE bit.

Note: During a power cycle, V_{DD} must fall below V_{POR} before power is reapplied, in order to ensure a power-on reset (see Table 10 “Static characteristics”).

Reset can be triggered from the following sources:

- External reset pin (during power-up or if user configured via UCFG1)
- Power-on detect
- Brownout detect
- Watchdog timer
- Software reset
- UART break character detect reset

For every reset source, there is a flag in the Reset Register, RSTSRC. The user can read this register to determine the most recent reset source. These flag bits can be cleared in software by writing a logic 0 to the corresponding bit. More than one flag bit may be set:

- During a power-on reset, both POF and BOF are set but the other flag bits are cleared.
- A Watchdog reset is similar to a power-on reset, both POF and BOF are set but the other flag bits are cleared.
- For any other reset, previously set flag bits that have not been cleared will remain set.

7.19.1 Reset vector

Following reset, the P89LPC9301/931A1 will fetch instructions from either address 0000H or the Boot address. The Boot address is formed by using the boot vector as the high byte of the address and the low byte of the address = 00H.

© NXP B.V. 2009. All rights reserved.

The boot address will be used if a UART break reset occurs, or the non-volatile boot status bit (BOOTSTAT.0) = 1, or the device is forced into ISP mode during power-on (see *P89LPC9301/931A1 User manual*). Otherwise, instructions will be fetched from address 0000H.

7.20 Timers/counters 0 and 1

The P89LPC9301/931A1 has two general purpose counter/timers which are upward compatible with the standard 80C51 Timer 0 and Timer 1. Both can be configured to operate either as timers or event counters. An option to automatically toggle the T0 and/or T1 pins upon timer overflow has been added.

In the 'Timer' function, the register is incremented every machine cycle.

In the 'Counter' function, the register is incremented in response to a 1-to-0 transition at its corresponding external input pin, T0 or T1. In this function, the external input is sampled once during every machine cycle.

Timer 0 and Timer 1 have five operating modes (Modes 0, 1, 2, 3 and 6). Modes 0, 1, 2 and 6 are the same for both Timers/Counters. Mode 3 is different.

7.20.1 Mode 0

Putting either Timer into Mode 0 makes it look like an 8048 Timer, which is an 8-bit Counter with a divide-by-32 prescaler. In this mode, the Timer register is configured as a 13-bit register. Mode 0 operation is the same for Timer 0 and Timer 1.

7.20.2 Mode 1

Mode 1 is the same as Mode 0, except that all 16 bits of the timer register are used.

7.20.3 Mode 2

Mode 2 configures the Timer register as an 8-bit Counter with automatic reload. Mode 2 operation is the same for Timer 0 and Timer 1.

7.20.4 Mode 3

When Timer 1 is in Mode 3 it is stopped. Timer 0 in Mode 3 forms two separate 8-bit counters and is provided for applications that require an extra 8-bit timer. When Timer 1 is in Mode 3 it can still be used by the serial port as a baud rate generator.

7.20.5 Mode 6

In this mode, the corresponding timer can be changed to a PWM with a full period of 256 timer clocks.

7.20.6 Timer overflow toggle output

Timers 0 and 1 can be configured to automatically toggle a port output whenever a timer overflow occurs. The same device pins that are used for the T0 and T1 count inputs are also used for the timer toggle outputs. The port outputs will be a logic 1 prior to the first timer overflow when this mode is turned on.

© NXP B.V. 2009. All rights reserved.

7.21 RTC/system timer

The P89LPC9301/931A1 has a simple RTC that allows a user to continue running an accurate timer while the rest of the device is powered down. The RTC can be a wake-up or an interrupt source. The RTC is a 23-bit down counter comprised of a 7-bit prescaler and a 16-bit loadable down counter. When it reaches all logic 0s, the counter will be reloaded again and the RTCF flag will be set. The clock source for this counter can be either the CPU clock (CCLK) or the XTAL oscillator. Only power-on reset and watchdog reset will reset the RTC and its associated SFRs to the default state.

The 16-bit loadable counter portion of the RTC is readable by reading the RTCDATL and RTCDATH registers.

7.22 UART

The P89LPC9301/931A1 has an enhanced UART that is compatible with the conventional 80C51 UART except that Timer 2 overflow cannot be used as a baud rate source. The P89LPC9301/931A1 does include an independent baud rate generator. The baud rate can be selected from the oscillator (divided by a constant), Timer 1 overflow, or the independent baud rate generator. In addition to the baud rate generation, enhancements over the standard 80C51 UART include Framing Error detection, automatic address recognition, selectable double buffering and several interrupt options. The UART can be operated in four modes: shift register, 8-bit UART, 9-bit UART, and CPU clock/32 or CPU clock/16.

7.22.1 Mode 0

Serial data enters and exits through RXD. TXD outputs the shift clock. 8 bits are transmitted or received, LSB first. The baud rate is fixed at $\frac{1}{16}$ of the CPU clock frequency.

7.22.2 Mode 1

10 bits are transmitted (through TXD) or received (through RXD): a start bit (logic 0), 8 data bits (LSB first), and a stop bit (logic 1). When data is received, the stop bit is stored in RB8 in special function register SCON. The baud rate is variable and is determined by the Timer 1 overflow rate or the baud rate generator (described in Section 7.22.5 “Baud rate generator and selection”).

7.22.3 Mode 2

11 bits are transmitted (through TXD) or received (through RXD): start bit (logic 0), 8 data bits (LSB first), a programmable 9th data bit, and a stop bit (logic 1). When data is transmitted, the 9th data bit (TB8 in SCON) can be assigned the value of logic 0 or logic 1. Or, for example, the parity bit (P, in the PSW) could be moved into TB8. When data is received, the 9th data bit goes into RB8 in special function register SCON, while the stop bit is not saved. The baud rate is programmable to either $\frac{1}{16}$ or $\frac{1}{32}$ of the CPU clock frequency, as determined by the SMOD1 bit in PCON.

© NXP B.V. 2009. All rights reserved.

7.22.4 Mode 3

11 bits are transmitted (through TXD) or received (through RXD): a start bit (logic 0), 8 data bits (LSB first), a programmable 9th data bit, and a stop bit (logic 1). In fact, Mode 3 is the same as Mode 2 in all respects except baud rate. The baud rate in Mode 3 is variable and is determined by the Timer 1 overflow rate or the baud rate generator (described in Section 7.22.5 “Baud rate generator and selection”).

7.22.5 Baud rate generator and selection

The P89LPC9301/931A1 enhanced UART has an independent baud rate generator. The baud rate is determined by a baud-rate preprogrammed into the BRGR1 and BRGR0 SFRs which together form a 16-bit baud rate divisor value that works in a similar manner as Timer 1 but is much more accurate. If the baud rate generator is used, Timer 1 can be used for other timing functions.

The UART can use either Timer 1 or the baud rate generator output (see Figure 6). Note that Timer T1 is further divided by 2 if the SMOD1 bit (PCON.7) is cleared. The independent baud rate generators use OSCCLK.

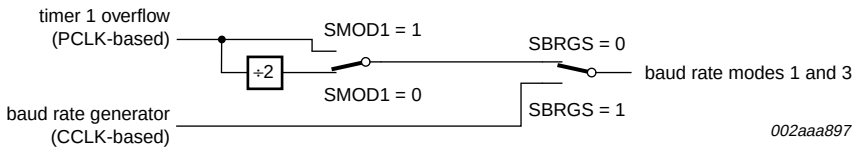

Fig 6. Baud rate sources for UART (Modes 1, 3)

7.22.6 Framing error

Framing error is reported in the status register (SSTAT). In addition, if SMOD0 (PCON.6) is logic 1, framing errors can be made available in SCON.7 respectively. If SMOD0 is logic 0, SCON.7 is SM0. It is recommended that SM0 and SM1 (SCON.7:6) are set up when SMOD0 is logic 0.

7.22.7 Break detect

Break detect is reported in the status register (SSTAT). A break is detected when 11 consecutive bits are sensed LOW. The break detect can be used to reset the device and force the device into ISP mode.

7.22.8 Double buffering

The UART has a transmit double buffer that allows buffering of the next character to be written to SnBUF while the first character is being transmitted. Double buffering allows transmission of a string of characters with only one stop bit between any two characters, as long as the next character is written between the start bit and the stop bit of the previous character.

Double buffering can be disabled. If disabled (DBMOD, i.e., SSTAT.7 = 0), the UART is compatible with the conventional 80C51 UART. If enabled, the UART allows writing to SBUF while the previous data is being shifted out. Double buffering is only allowed in Modes 1, 2 and 3. When operated in Mode 0, double buffering must be disabled (DBMOD = 0).

© NXP B.V. 2009. All rights reserved.

7.22.9 Transmit interrupts with double buffering enabled (modes 1, 2 and 3)

Unlike the conventional UART, in double buffering mode, the TI interrupt is generated when the double buffer is ready to receive new data.

7.22.10 The 9th bit (bit 8) in double buffering (modes 1, 2 and 3)

If double buffering is disabled TB8 can be written before or after SBUF is written, as long as TB8 is updated some time before that bit is shifted out. TB8 must not be changed until the bit is shifted out, as indicated by the TI interrupt.

If double buffering is enabled, TB8 **must** be updated before SBUF is written, as TB8 will be double-buffered together with SBUF data.

7.23 I²C-bus serial interface

The I²C-bus uses two wires (SDA and SCL) to transfer information between devices connected to the bus, and it has the following features:

- Bidirectional data transfer between masters and slaves
- Multi master bus (no central master)
- Arbitration between simultaneously transmitting masters without corruption of serial data on the bus
- Serial clock synchronization allows devices with different bit rates to communicate via one serial bus
- Serial clock synchronization can be used as a handshake mechanism to suspend and resume serial transfer
- The I²C-bus may be used for test and diagnostic purposes.

A typical I²C-bus configuration is shown in Figure 7. The P89LPC9301/931A1 device provides a byte-oriented I²C-bus interface that supports data transfers up to 400 kHz.

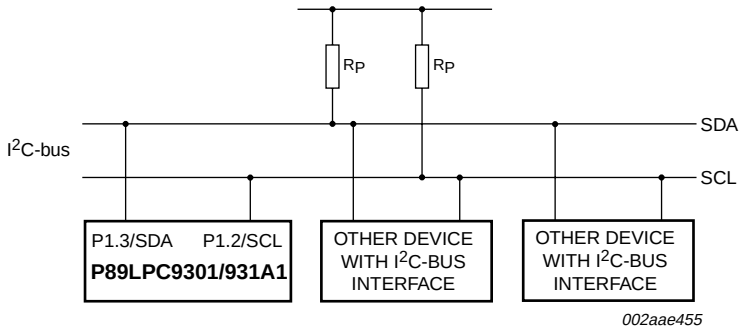

Fig 7. I²C-bus configuration

© NXP B.V. 2009. All rights reserved.

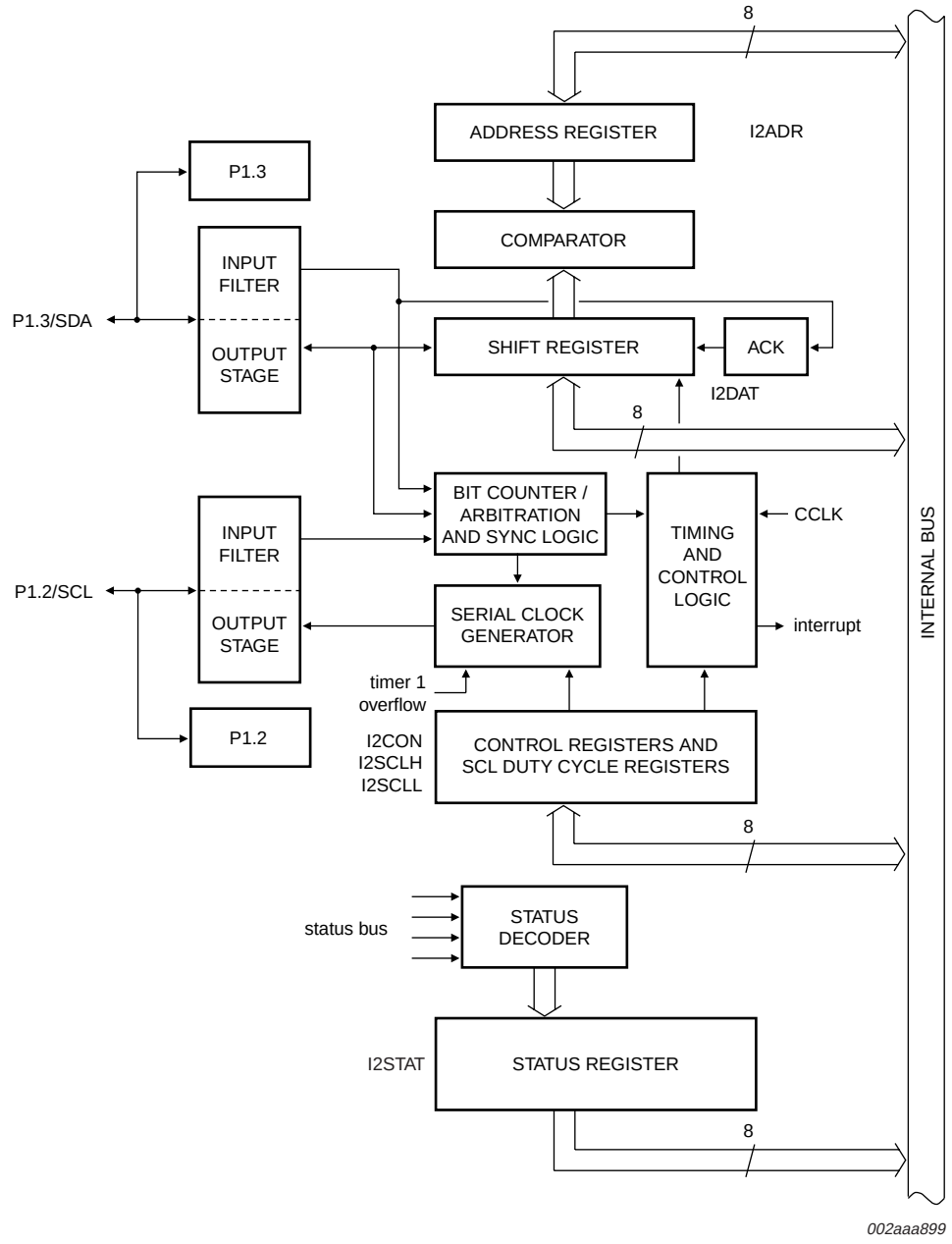

Fig 8. I^2C-bus serial interface block diagram

© NXP B.V. 2009. All rights reserved.

7.24 SPI

The P89LPC9301/931A1 provides another high-speed serial communication interface: the SPI interface. SPI is a full-duplex, high-speed, synchronous communication bus with two operation modes: Master mode and Slave mode. Up to 3 Mbit/s can be supported in either Master mode or Slave mode. It has a Transfer Completion Flag and Write Collision Flag Protection.

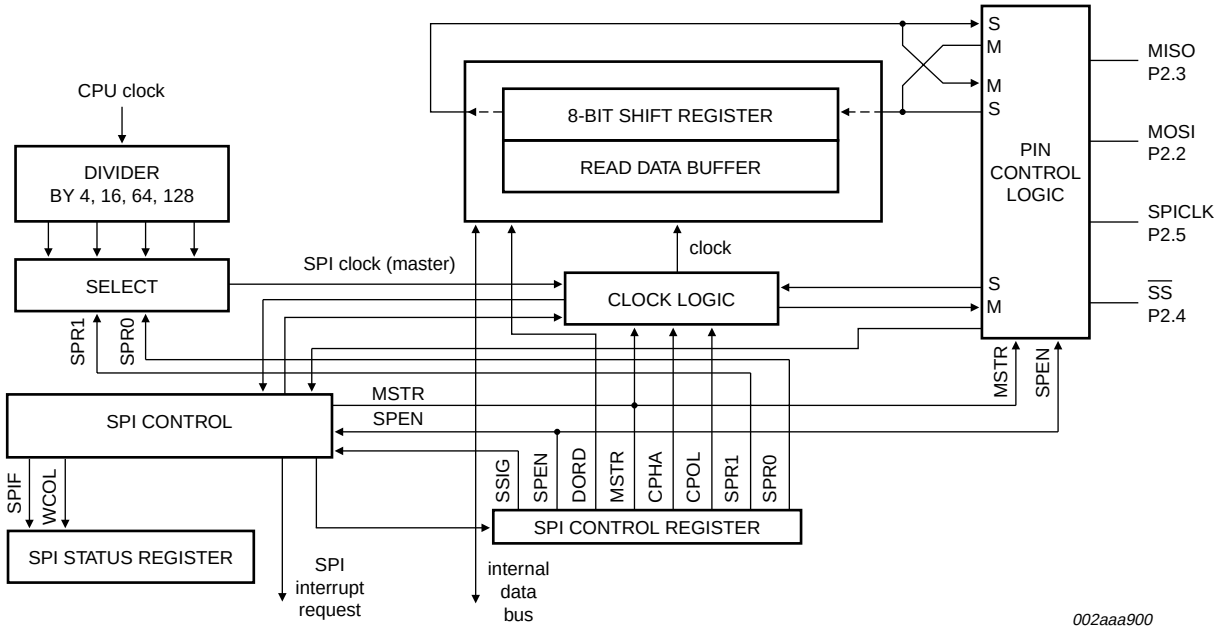

Fig 9. SPI block diagram

The SPI interface has four pins: SPICLK, MOSI, MISO and $\overline{SS}$:

- SPICLK, MOSI and MISO are typically tied together between two or more SPI devices. Data flows from master to slave on MOSI (Master Out Slave In) pin and flows from slave to master on MISO (Master In Slave Out) pin. The SPICLK signal is output in the Master mode and is input in the Slave mode. If the SPI system is disabled, i.e., SPEN (SPCTL.6) = 0 (reset value), these pins are configured for port functions.
- $\overline{SS}$ is the optional slave select pin. In a typical configuration, an SPI master asserts one of its port pins to select one SPI device as the current slave. An SPI slave device uses its $\overline{SS}$ pin to determine whether it is selected.

Typical connections are shown in Figure 10 through Figure 12.

© NXP B.V. 2009. All rights reserved.

7.24.1 Typical SPI configurations

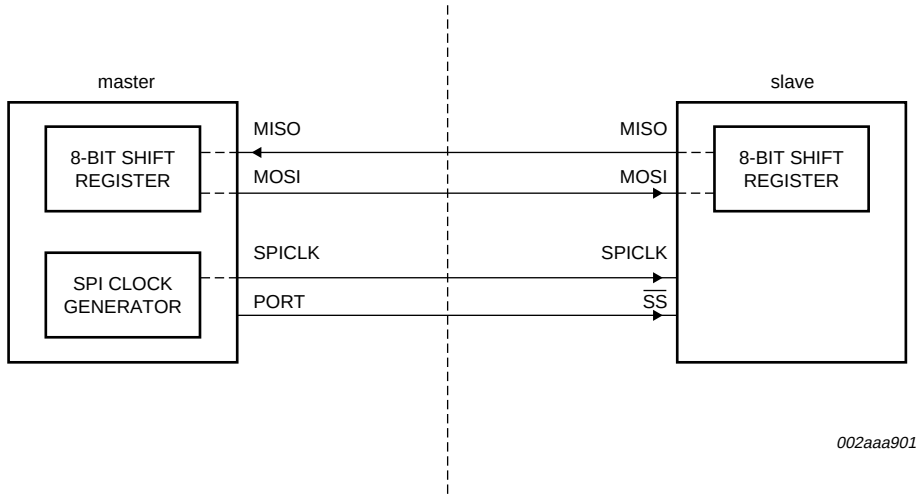

Fig 10. SPI single master single slave configuration

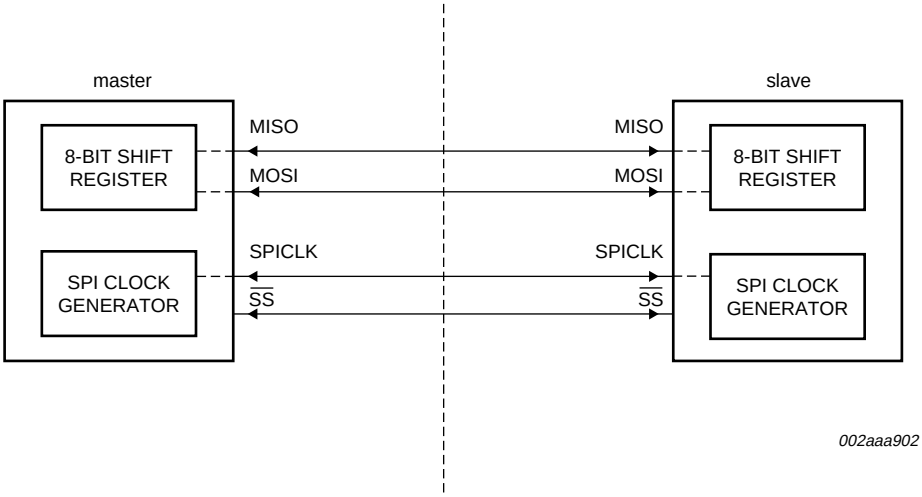

Fig 11. SPI dual device configuration, where either can be a master or a slave

© NXP B.V. 2009. All rights reserved.

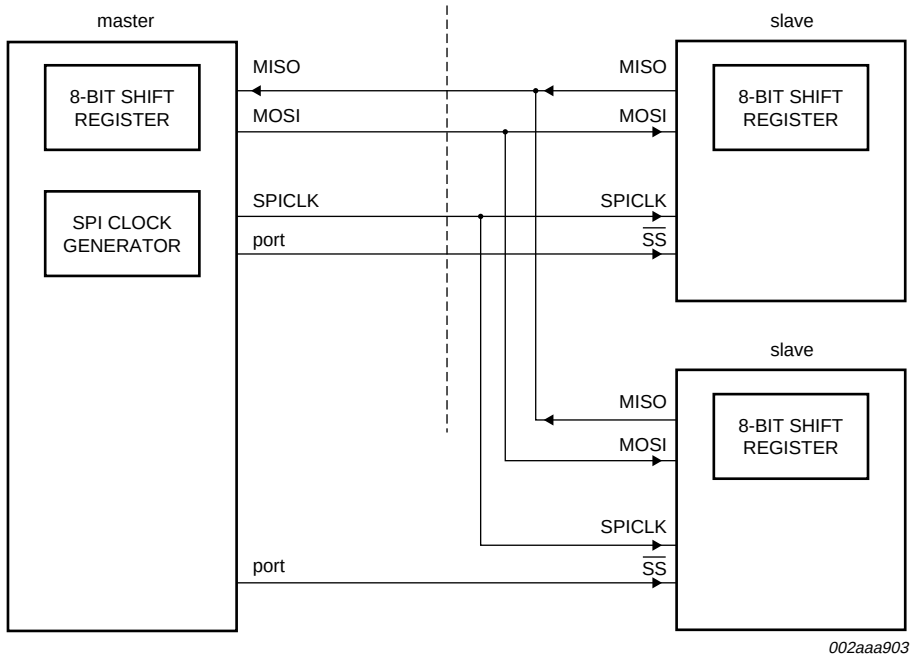

Fig 12. SPI single master multiple slaves configuration

7.25 Analog comparators

Two analog comparators are provided on the P89LPC9301/931A1. Input and output options allow use of the comparators in a number of different configurations. Comparator operation is such that the output is a logical one (which may be read in a register and/or routed to a pin) when the positive input (one of two selectable inputs) is greater than the negative input (selectable from a pin or an internal reference voltage). Otherwise the output is a zero. Each comparator may be configured to cause an interrupt when the output value changes.

The overall connections to both comparators are shown in Figure 13. The comparators function to V_{DD} = 2.4 V.

When each comparator is first enabled, the comparator output and interrupt flag are not guaranteed to be stable for 10 µs. The corresponding comparator interrupt should not be enabled during that time, and the comparator interrupt flag must be cleared before the interrupt is enabled in order to prevent an immediate interrupt service.

When a comparator is disabled the comparator's output, COn, goes HIGH. If the comparator output was LOW and then is disabled, the resulting transition of the comparator output from a LOW to HIGH state will set the comparator flag, CMFn. This will cause an interrupt if the comparator interrupt is enabled. The user should therefore disable the comparator interrupt prior to disabling the comparator. Additionally, the user should clear the comparator flag, CMFn, after disabling the comparator.

© NXP B.V. 2009. All rights reserved.

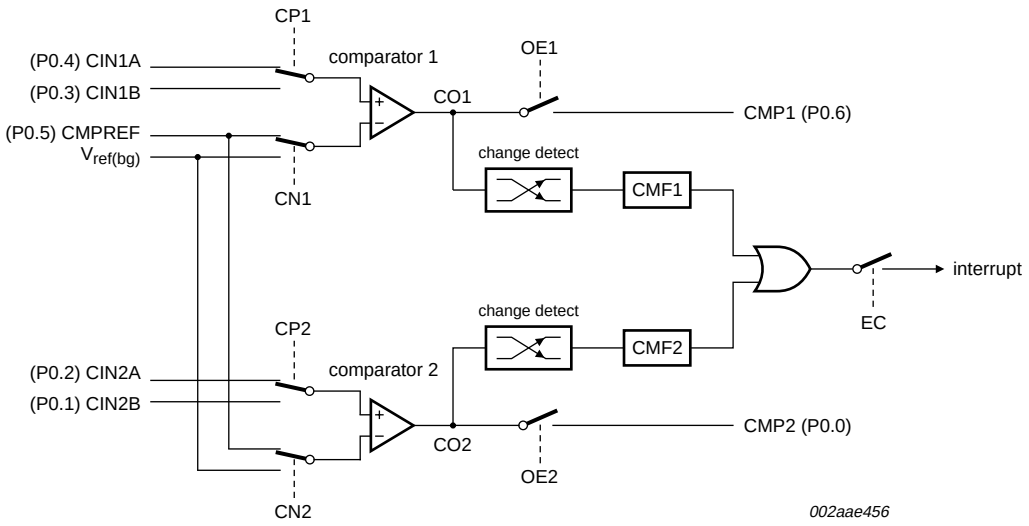

Fig 13. Comparator input and output connections

7.25.1 Internal reference voltage

An internal reference voltage generator may supply a default reference when a single comparator input pin is used. The value of the internal reference voltage, referred to as $V_{ref(bg)}$, is 1.23 V ± 10 %.

7.25.2 Comparator interrupt

Each comparator has an interrupt flag contained in its configuration register. This flag is set whenever the comparator output changes state. The flag may be polled by software or may be used to generate an interrupt. The two comparators use one common interrupt vector. If both comparators enable interrupts, after entering the interrupt service routine, the user needs to read the flags to determine which comparator caused the interrupt.

7.25.3 Comparators and power reduction modes

Either or both comparators may remain enabled when Power-down or Idle mode is activated, but both comparators are disabled automatically in Total Power-down mode.

If a comparator interrupt is enabled (except in Total Power-down mode), a change of the comparator output state will generate an interrupt and wake-up the processor. If the comparator output to a pin is enabled, the pin should be configured in the push-pull mode in order to obtain fast switching times while in Power-down mode. The reason is that with the **oscillator** stopped, the temporary strong pull-up that normally occurs during switching on a quasi-bidirectional port pin does not take place.

Comparators consume power in Power-down and Idle modes, as well as in the normal operating mode. This fact should be taken into account when system power consumption is an issue. To minimize power consumption, the user can disable the comparators via PCONA.5, or put the device in Total Power-down mode.

© NXP B.V. 2009. All rights reserved.

7.26 KBI

The Keypad Interrupt function (KBI) is intended primarily to allow a single interrupt to be generated when Port 0 is equal to or not equal to a certain pattern. This function can be used for bus address recognition or keypad recognition. The user can configure the port via SFRs for different tasks.

The Keypad Interrupt Mask Register (KBMASK) is used to define which input pins connected to Port 0 can trigger the interrupt. The Keypad Pattern Register (KBPATN) is used to define a pattern that is compared to the value of Port 0. The Keypad Interrupt Flag (KBIF) in the Keypad Interrupt Control Register (KBCON) is set when the condition is matched while the Keypad Interrupt function is active. An interrupt will be generated if enabled. The PATN_SEL bit in the Keypad Interrupt Control Register (KBCON) is used to define equal or not-equal for the comparison.

In order to use the Keypad Interrupt as an original KBI function like in P87LPC76x series, the user needs to set KBPATN = 0FFH and PATN_SEL = 1 (not equal), then any key connected to Port 0 which is enabled by the KBMASK register will cause the hardware to set KBIF and generate an interrupt if it has been enabled. The interrupt may be used to wake-up the CPU from Idle or Power-down modes. This feature is particularly useful in handheld, battery-powered systems that need to carefully manage power consumption yet also need to be convenient to use.

In order to set the flag and cause an interrupt, the pattern on Port 0 must be held longer than six CCLKs.

7.27 Watchdog timer

The watchdog timer causes a system reset when it underflows as a result of a failure to feed the timer prior to the timer reaching its terminal count. It consists of a programmable 12-bit prescaler, and an 8-bit down counter. The down counter is decremented by a tap taken from the prescaler. The clock source for the prescaler can be the PCLK, the nominal 400 kHz watchdog oscillator or crystal oscillator. The watchdog timer can only be reset by a power-on reset. When the watchdog feature is disabled, it can be used as an interval timer and may generate an interrupt. Figure 14 shows the watchdog timer in Watchdog mode. Feeding the watchdog requires a two-byte sequence. If PCLK is selected as the watchdog clock and the CPU is powered down, the watchdog is disabled. The watchdog timer has a time-out period that ranges from a few μs to a few seconds. Please refer to the *P89LPC9301/931A1 User manual* for more details.

© NXP B.V. 2009. All rights reserved.

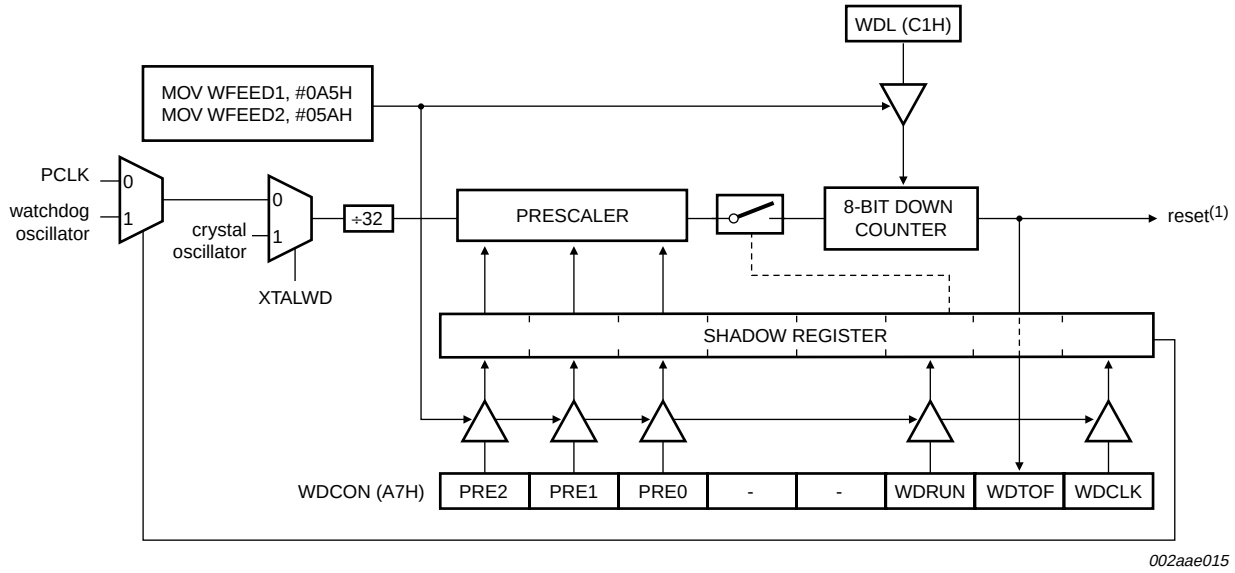

(1) Watchdog reset can also be caused by an invalid feed sequence, or by writing to WDCON not immediately followed by a feed sequence.

Fig 14. Watchdog timer in Watchdog mode (WDTE = 1)

7.28 Additional features

7.28.1 Software reset

The SRST bit in AUXR1 gives software the opportunity to reset the processor completely, as if an external reset or watchdog reset had occurred. Care should be taken when writing to AUXR1 to avoid accidental software resets.

7.28.2 Dual data pointers

The dual Data Pointers (DPTR) provides two different Data Pointers to specify the address used with certain instructions. The DPS bit in the AUXR1 register selects one of the two Data Pointers. Bit 2 of AUXR1 is permanently wired as a logic 0 so that the DPS bit may be toggled (thereby switching Data Pointers) simply by incrementing the AUXR1 register, without the possibility of inadvertently altering other bits in the register.

7.29 Flash program memory

7.29.1 General description

The P89LPC9301/931A1 flash memory provides in-circuit electrical erasure and programming. The flash can be erased, read, and written as bytes. The Sector and Page Erase functions can erase any flash sector (1 kB) or page (64 bytes). The Chip Erase operation will erase the entire program memory. ICP using standard commercial programmers is available. In addition, IAP and byte-erase allows code memory to be used for non-volatile data storage. On-chip erase and write timing generation contribute to a user-friendly programming interface. The P89LPC9301/931A1 flash reliably stores memory contents even after 100,000 erase and program cycles. The cell is designed to

© NXP B.V. 2009. All rights reserved.

optimize the erase and programming mechanisms. The P89LPC9301/931A1 uses V_{DD} as the supply voltage to perform the Program/Erase algorithms. When voltage supply is lower than 2.4 V, the BOD FLASH is tripped and flash erase/program is blocked.

7.29.2 Features

- Programming and erase over the full operating voltage range.
- Byte erase allows code memory to be used for data storage.
- Read/Programming/Erase using ISP/IAP/ICP.
- Internal fixed boot ROM, containing low-level IAP routines available to user code.
- Default loader providing ISP via the serial port, located in upper end of user program memory.
- Boot vector allows user-provided flash loader code to reside anywhere in the flash memory space, providing flexibility to the user.
- Any flash program/erase operation in 2 ms.
- Programming with industry-standard commercial programmers.
- Programmable security for the code in the flash for each sector.
- 100,000 typical erase/program cycles for each byte.
- 10 year minimum data retention.

7.29.3 Flash organization

The program memory consists of four/eight 1 kB sectors on the P89LPC9301/931A1 devices. Each sector can be further divided into 64-byte pages. In addition to sector erase, page erase, and byte erase, a 64-byte page register is included which allows from 1 byte to 64 bytes of a given page to be programmed at the same time, substantially reducing overall programming time.

7.29.4 Using flash as data storage

The flash code memory array of this device supports individual byte erasing and programming. Any byte in the code memory array may be read using the MOVC instruction, provided that the sector containing the byte has not been secured (a MOVC instruction is not allowed to read code memory contents of a secured sector). Thus any byte in a non-secured sector may be used for non-volatile data storage.

7.29.5 Flash programming and erasing

Four different methods of erasing or programming of the flash are available. The flash may be programmed or erased in the end-user application (IAP) under control of the application's firmware. Another option is to use the ICP mechanism. This ICP system provides for programming through a serial clock/serial data interface. As shipped from the factory, the upper 512 bytes of user code space contains a serial ISP routine allowing for the device to be programmed in circuit through the serial port. The flash may also be programmed or erased using a commercially available EPROM programmer which supports this device. This device does not provide for direct verification of code memory contents. Instead, this device provides a 32-bit CRC result on either a sector or the entire user code space.

Remark: When voltage supply is lower than 2.4 V, the BOD FLASH is tripped and flash erase/program is blocked.

© NXP B.V. 2009. All rights reserved.

7.29.6 ICP

ICP is performed without removing the microcontroller from the system. The ICP facility consists of internal hardware resources to facilitate remote programming of the P89LPC9301/931A1 through a two-wire serial interface. The NXP ICP facility has made in-circuit programming in an embedded application - using commercially available programmers - possible with a minimum of additional expense in components and circuit board area. The ICP function uses five pins. Only a small connector needs to be available to interface your application to a commercial programmer in order to use this feature. Additional details may be found in the *P89LPC9301/931A1 User manual*.

7.29.7 IAP

IAP is performed in the application under the control of the microcontroller's firmware. The IAP facility consists of internal hardware resources to facilitate programming and erasing. The NXP IAP has made in-application programming in an embedded application possible without additional components. Two methods are available to accomplish IAP. A set of predefined IAP functions are provided in a Boot ROM and can be called through a common interface, PGM_MTP. Several IAP calls are available for use by an application program to permit selective erasing and programming of flash sectors, pages, security bits, configuration bytes, and device ID. These functions are selected by setting up the microcontroller's registers before making a call to PGM_MTP at FF03H. The Boot ROM occupies the program memory space at the top of the address space from FF00H to FEFFH, thereby not conflicting with the user program memory space.

In addition, IAP operations can be accomplished through the use of four SFRs consisting of a control/status register, a data register, and two address registers. Additional details may be found in the *P89LPC9301/931A1 User manual*.

7.29.8 ISP

ISP is performed without removing the microcontroller from the system. The ISP facility consists of a series of internal hardware resources coupled with internal firmware to facilitate remote programming of the P89LPC9301/931A1 through the serial port. This firmware is provided by NXP and embedded within each P89LPC9301/931A1 device. The NXP ISP facility has made in-system programming in an embedded application possible with a minimum of additional expense in components and circuit board area. The ISP function uses five pins (V_{DD}, V_{SS}, TXD, RXD, and $\overline{RST}$). Only a small connector needs to be available to interface your application to an external circuit in order to use this feature.

7.29.9 Power-on reset code execution

The P89LPC9301/931A1 contains two special flash elements: the Boot Vector and the Boot Status bit. Following reset, the P89LPC9301/931A1 examines the contents of the Boot Status bit. If the Boot Status bit is set to zero, power-up execution starts at location 0000H, which is the normal start address of the user's application code. When the Boot Status bit is set to a value other than zero, the contents of the Boot Vector are used as the high byte of the execution address and the low byte is set to 00H.

Table 8 shows the factory default Boot Vector setting for these devices. A factory-provided bootloader is pre-programmed into the address space indicated and uses the indicated bootloader entry point to perform ISP functions. This code can be erased by the user.

© NXP B.V. 2009. All rights reserved.

Remark: Users who wish to use this loader should take precautions to avoid erasing the 1 kB sector that contains this bootloader. Instead, the page erase function can be used to erase the first eight 64-byte pages located in this sector.

A custom bootloader can be written with the Boot Vector set to the custom bootloader, if desired.

Table 8. Default boot vector values and ISP entry points

Device	Default boot vector	Default bootloader entry point	Default bootloader code range	1 kB sector range
P89LPC9301	0FH	0F00H	0E00H to 0FFFH	0C00H to 0FFFH
P89LPC931A1	1FH	1F00H	1E00H to 1FFFH	1C00H to 1FFFH

7.29.10 Hardware activation of the bootloader

The bootloader can also be executed by forcing the device into ISP mode during a power-on sequence (see the *P89LPC9301/931A1 User manual* for specific information). This has the same effect as having a non-zero status byte. This allows an application to be built that will normally execute user code but can be manually forced into ISP operation. If the factory default setting for the boot vector is changed, it will no longer point to the factory pre-programmed ISP bootloader code. After programming the flash, the status byte should be programmed to zero in order to allow execution of the user's application code beginning at address 0000H.

7.30 User configuration bytes

Some user-configurable features of the P89LPC9301/931A1 must be defined at power-up and therefore cannot be set by the program after start of execution. These features are configured through the use of the flash byte UCFG1 and UCFG2. Please see the *P89LPC9301/931A1 User manual* for additional details.

7.31 User sector security bytes

There are four/eight User Sector Security Bytes on the P89LPC9301/931A1. Each byte corresponds to one sector. Please see the *P89LPC9301/931A1 User manual* for additional details.

© NXP B.V. 2009. All rights reserved.

8. Limiting values

Table 9. Limiting values

In accordance with the Absolute Maximum Rating System (IEC 60134).[1]

Symbol	Parameter	Conditions		Min	Max	Unit
$T_{amb(bias)}$	bias ambient temperature			–55	+125	°C
T_{stg}	storage temperature			–65	+150	°C
$I_{OH(I/O)}$	HIGH-level output current per input/output pin			-	20	mA
$I_{OL(I/O)}$	LOW-level output current per input/output pin			-	20	mA
$I_{I/Otot(max)}$	maximum total input/output current			-	100	mA
V_n	voltage on any other pin	except V_{SS}, with respect to V_{DD}		-	3.5	V
$P_{tot(pack)}$	total power dissipation (per package)	based on package heat transfer, not device power consumption		-	1.5	W
V_{esd}	electrostatic discharge voltage	human body model; all pins	[2]	–2000	+2000	V
		charged device model; all pins		–500	+500	V

[1] The following applies to Table 9:

a) This product includes circuitry specifically designed for the protection of its internal devices from the damaging effects of excessive static charge. Nonetheless, it is suggested that conventional precautions be taken to avoid applying greater than the rated maximum.

b) Parameters are valid over ambient temperature range unless otherwise specified. All voltages are with respect to V_{SS} unless otherwise noted.

[2] Human body model: equivalent to discharging a 100 pF capacitor through a 1.5 kΩ series resistor.

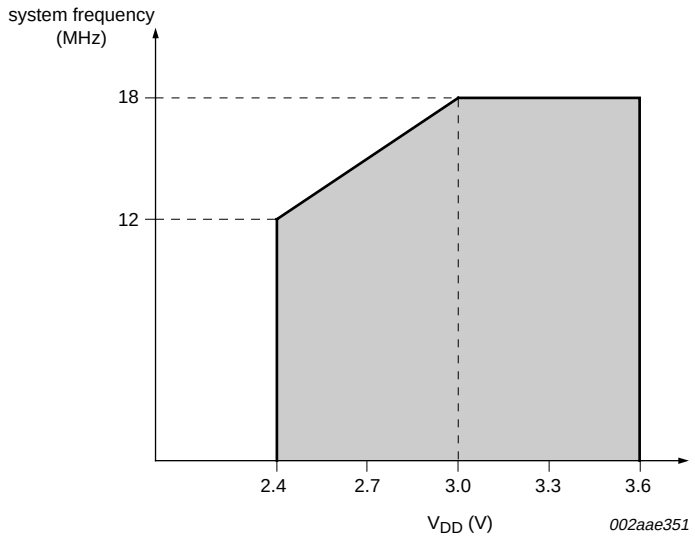

Fig 15. Frequency vs. supply voltage

© NXP B.V. 2009. All rights reserved.

9. Static characteristics

Table 10. Static characteristics

V_{DD} = 2.4 V to 3.6 V unless otherwise specified.
T_{amb} = −40 °C to +85 °C for industrial applications, unless otherwise specified.

Symbol	Parameter	Conditions		Min	Typ[1]	Max	Unit
$I_{DD(oper)}$	operating supply current	V_{DD} = 3.6 V; f_{osc} = 12 MHz	[2]	-	10	15	mA
		V_{DD} = 3.6 V; f_{osc} = 18 MHz	[2]	-	14	23	mA
$I_{DD(idle)}$	Idle mode supply current	V_{DD} = 3.6 V; f_{osc} = 12 MHz	[3]	-	3.25	5	mA
		V_{DD} = 3.6 V; f_{osc} = 18 MHz	[3]	-	5	7	mA
$I_{DD(pd)}$	Power-down mode supply current	V_{DD} = 3.6 V; voltage comparators powered down	[4]	-	20	40	µA
$I_{DD(tpd)}$	total Power-down mode supply current	V_{DD} = 3.6 V	[5]	-	1	5	µA
$(dV/dt)_r$	rise rate	of V_{DD}; to ensure power-on reset signal		5	-	5000	V/s
V_{DDR}	data retention supply voltage			1.5	-	-	V
$V_{th(HL)}$	HIGH-LOW threshold voltage	except SCL, SDA		$0.22V_{DD}$	$0.4V_{DD}$	-	V
V_{IL}	LOW-level input voltage	SCL, SDA only		−0.5	-	$0.3V_{DD}$	V
$V_{th(LH)}$	LOW-HIGH threshold voltage	except SCL, SDA		-	$0.6V_{DD}$	$0.7V_{DD}$	V
V_{IH}	HIGH-level input voltage	SCL, SDA only		$0.7V_{DD}$	-	5.5	V
V_{hys}	hysteresis voltage	port 1		-	$0.2V_{DD}$	-	V
V_{OL}	LOW-level output voltage	I_{OL} = 20 mA; V_{DD} = 2.4 V to 3.6 V all ports, all modes except high-Z	[6]	-	0.6	1.0	V
		I_{OL} = 3.2 mA; V_{DD} = 2.4 V to 3.6 V all ports, all modes except high-Z	[6]	-	0.2	0.3	V
V_{OH}	HIGH-level output voltage	I_{OH} = −20 µA; V_{DD} = 2.4 V to 3.6 V; all ports, quasi-bidirectional mode		V_{DD} − 0.3	V_{DD} − 0.2	-	V
		I_{OH} = −3.2 mA; V_{DD} = 2.4 V to 3.6 V; all ports, push-pull mode		V_{DD} − 0.7	V_{DD} − 0.4	-	V
		I_{OH} = −10 mA; V_{DD} = 2.4 V to 3.6 V; all ports, push-pull mode		-	3.2	-	V
V_{xtal}	crystal voltage	on XTAL1, XTAL2 pins; with respect to V_{SS}		−0.5	-	+4.0	V
V_n	voltage on any other pin	except XTAL1, XTAL2, V_{DD}; with respect to V_{SS}	[7]	−0.5	-	+5.5	V
C_{iss}	input capacitance		[8]	-	-	15	pF
I_{IL}	LOW-level input current	V_I = 0.4 V	[9]	-	-	−80	µA
I_{LI}	input leakage current	$V_I = V_{IL}$, V_{IH}, or $V_{th(HL)}$	[10]	-	-	±1	µA

© NXP B.V. 2009. All rights reserved.

Table 10. Static characteristics *…continued*

V_{DD} = 2.4 V to 3.6 V unless otherwise specified.
T_{amb} = –40 °C to +85 °C for industrial applications, unless otherwise specified.

Symbol	Parameter	Conditions		Min	Typ[1]	Max	Unit
I_{THL}	HIGH-LOW transition current	all ports; V_I = 1.5 V at V_{DD} = 3.6 V	[11]	–30	-	–450	µA
$R_{RST_N(int)}$	internal pull-up resistance on pin $\overline{RST}$	pin $\overline{RST}$		10	-	30	kΩ
$V_{ref(bg)}$	band gap reference voltage			1.11	1.23	1.34	V
TC_{bg}	band gap temperature coefficient			-	10	20	ppm/°C

[1] Typical ratings are not guaranteed. The values listed are at room temperature, 3 V.

[2] The $I_{DD(oper)}$ specification is measured using an external clock with code while(1) {} executed from on-chip flash.

[3] The $I_{DD(idle)}$ specification is measured using an external clock with no active peripherals, with the following functions disabled: real-time clock and watchdog timer.

[4] The $I_{DD(pd)}$ specification is measured using internal RC oscillator with the following functions disabled: comparators, real-time clock, and watchdog timer.

[5] The $I_{DD(tpd)}$ specification is measured using an external clock with the following functions disabled: comparators, real-time clock, brownout detect, and watchdog timer.

[6] See Section 8 “Limiting values” for steady state (non-transient) limits on I_{OL} or I_{OH}. If I_{OL}/I_{OH} exceeds the test condition, V_{OL}/V_{OH} may exceed the related specification.

[7] This specification can be applied to pins which have A/D input or analog comparator input functions when the pin is not being used for those analog functions. When the pin is being used as an analog input pin, the maximum voltage on the pin must be limited to 4.0 V with respect to V_{SS}.

[8] Pin capacitance is characterized but not tested.

[9] Measured with port in quasi-bidirectional mode.

[10] Measured with port in high-impedance mode.

[11] Port pins source a transition current when used in quasi-bidirectional mode and externally driven from logic 1 to logic 0. This current is highest when V_I is approximately 2 V.

© NXP B.V. 2009. All rights reserved.

9.1 Current characteristics

Note: The graphs provided are a statistical summary based on a limited number of samples and only for information purposes. The performance characteristics listed are not tested or guaranteed.

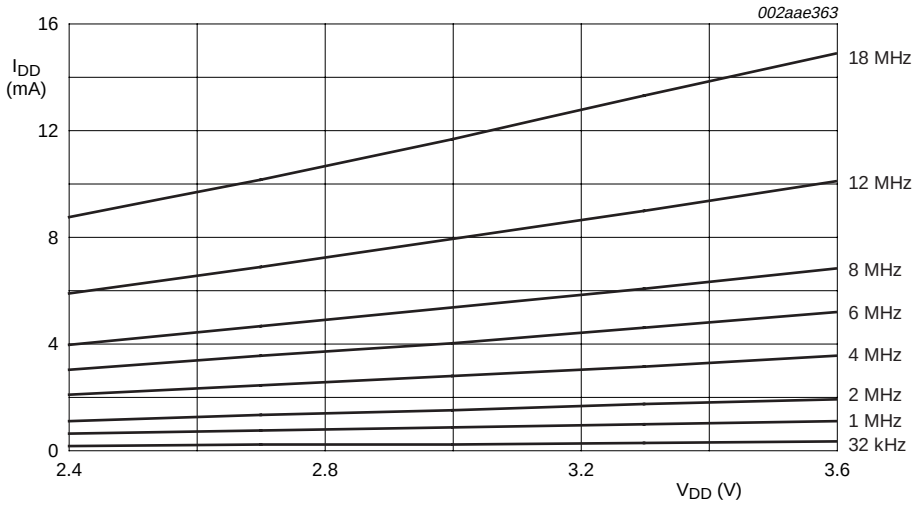

Test conditions: normal mode, code while(1) {} executed from on-chip flash; using an external clock.

Fig 16. $I_{DD(oper)}$ vs. frequency at +25 °C

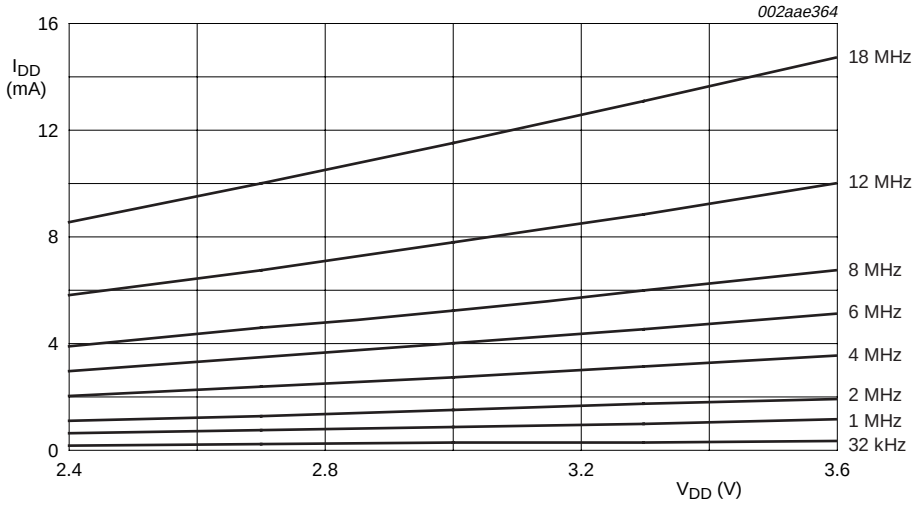

Test conditions: normal mode, code while(1) {} executed from on-chip flash; using an external clock.

Fig 17. $I_{DD(oper)}$ vs. frequency at −40 °C

© NXP B.V. 2009. All rights reserved.

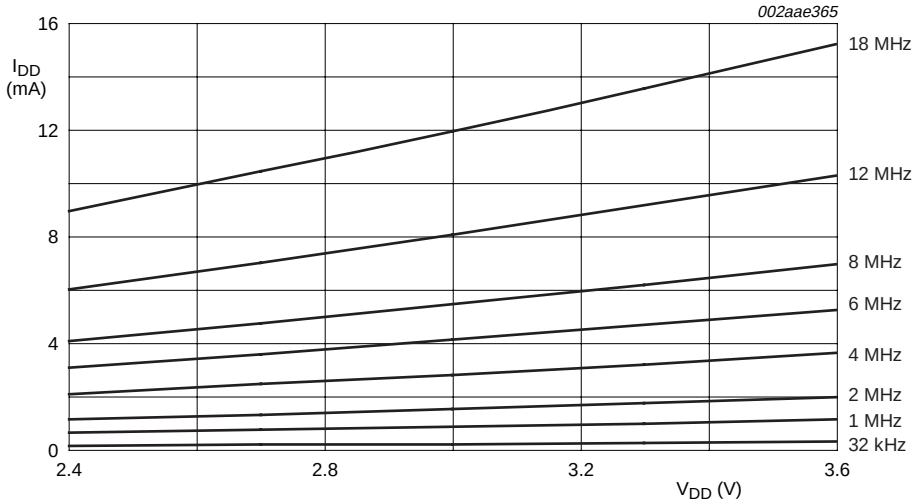

Test conditions: normal mode, code while(1) {} executed from on-chip flash; using an external clock.

Fig 18. $I_{DD(oper)}$ vs. frequency at +85 °C

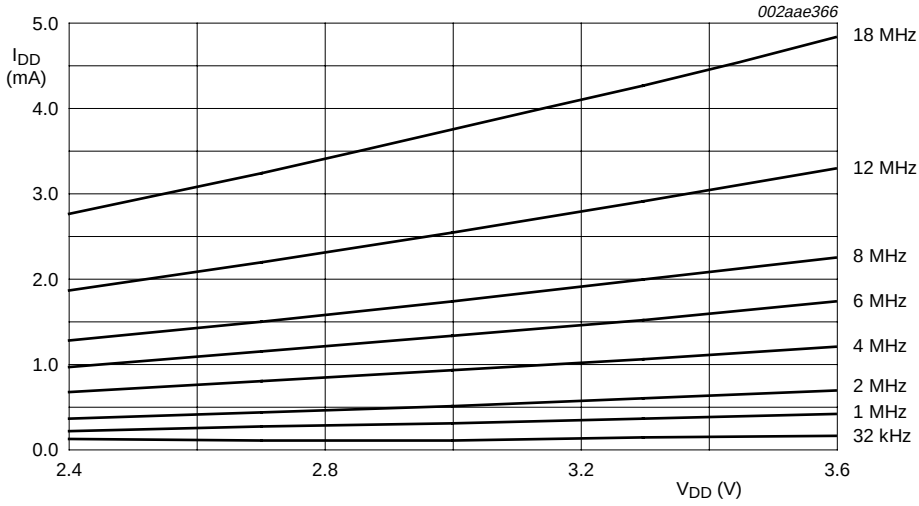

Test conditions: Idle mode entered executing code from on-chip flash; using an external clock with no active peripherals, with the following functions disabled: real-time clock and watchdog timer.

Fig 19. $I_{DD(idle)}$ vs. frequency at +25 °C

© NXP B.V. 2009. All rights reserved.

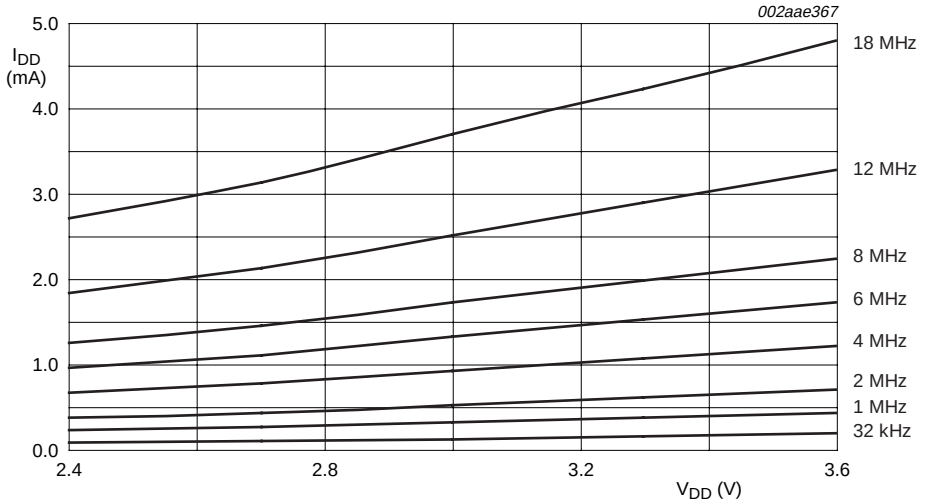

Test conditions: Idle mode entered executing code from on-chip flash; using an external clock with no active peripherals, with the following functions disabled: real-time clock and watchdog timer.

Fig 20. $I_{DD(idle)}$ vs. frequency at −40 °C

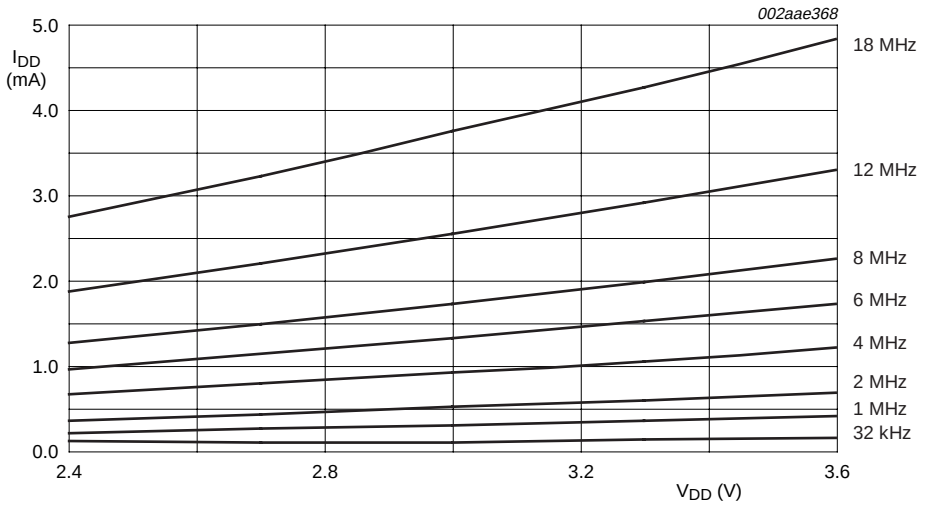

Test conditions: Idle mode entered executing code from on-chip flash; using an external clock with no active peripherals, with the following functions disabled: real-time clock and watchdog timer.

Fig 21. $I_{DD(idle)}$ vs. frequency at +85 °C

© NXP B.V. 2009. All rights reserved.

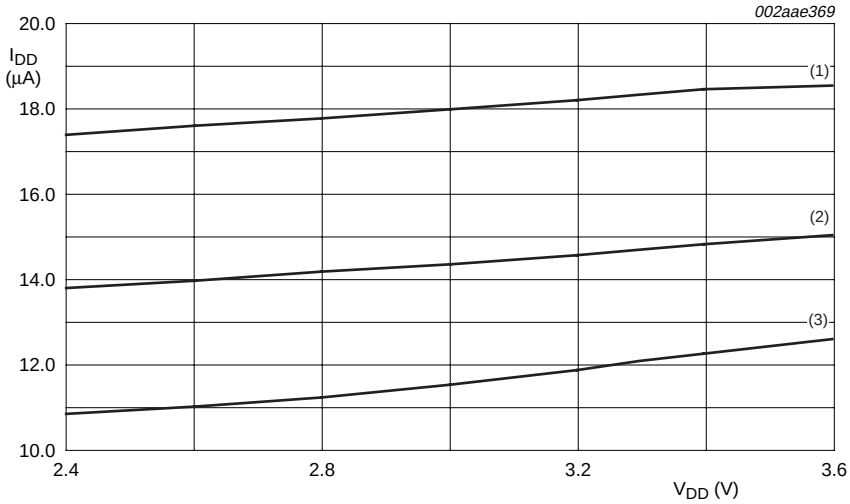

Test conditions: Power-down mode, using internal RC oscillator with the following functions disabled: comparators, real-time clock, and watchdog timer.

(1) +85 °C

(2) +25 °C

(3) –40 °C

Fig 22. $I_{DD(pd)}$ vs. V_{DD}

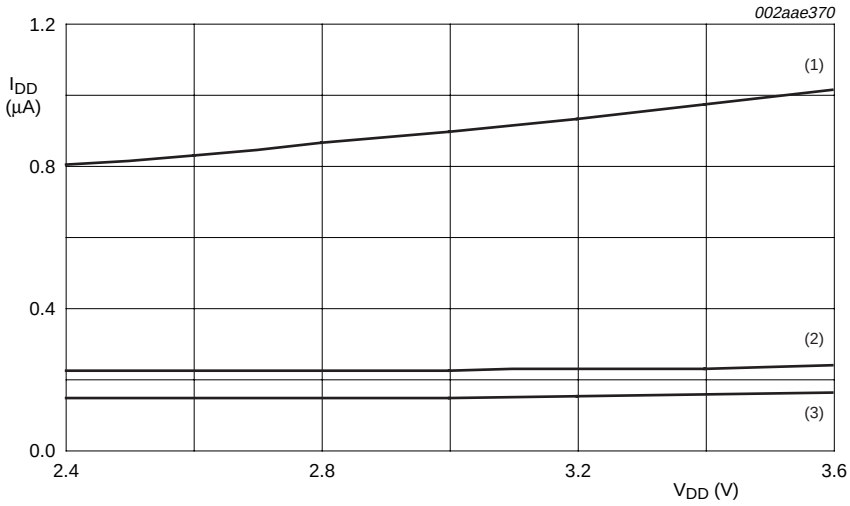

Test conditions: Total Power-down mode, using internal RC oscillator with the following functions disabled: comparators, brownout detect, real-time clock, and watchdog timer.

(1) +85 °C

(2) –40 °C

(3) +25 °C

Fig 23. $I_{DD(tpd)}$ vs. V_{DD}

© NXP B.V. 2009. All rights reserved.

9.2 Internal RC/watchdog oscillator characteristics

Note: The graphs provided are a statistical summary based on a limited number of samples and only for information purposes. The performance characteristics listed are not tested or guaranteed.

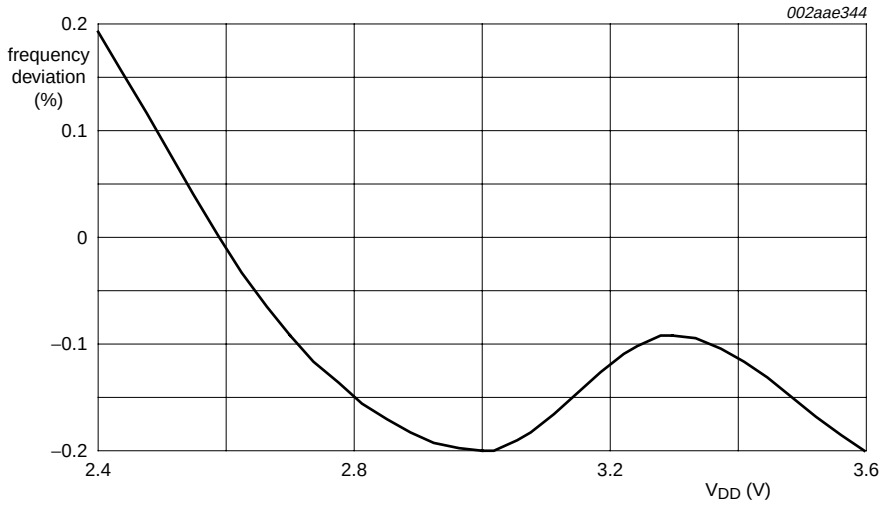

Central frequency of internal RC oscillator = 7.3728 MHz

Fig 24. Average internal RC oscillator frequency vs. V_{DD} at +25 °C

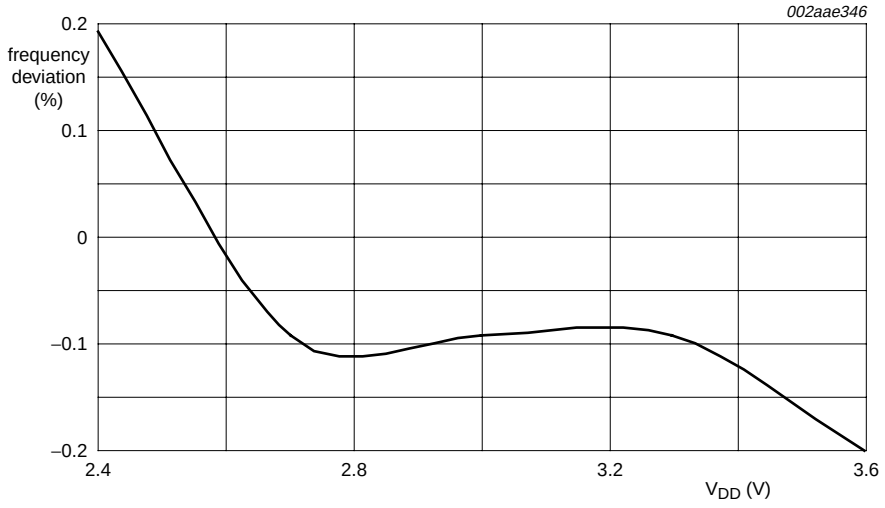

Note: Central frequency of internal RC oscillator = 7.3728 MHz

Fig 25. Average internal RC oscillator frequency vs. V_{DD} at −40 °C

© NXP B.V. 2009. All rights reserved.

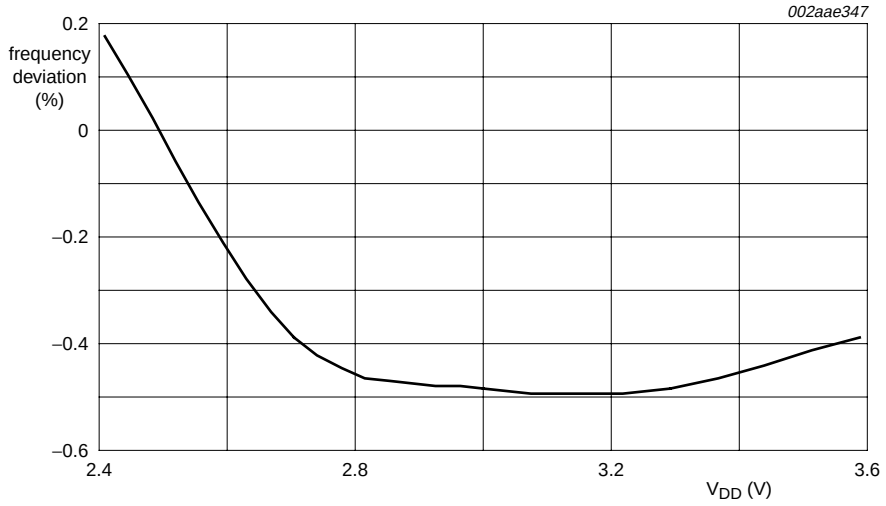

Central frequency of internal RC oscillator = 7.3728 MHz

Fig 26. Average internal RC oscillator frequency vs. V_{DD} at +85 °C

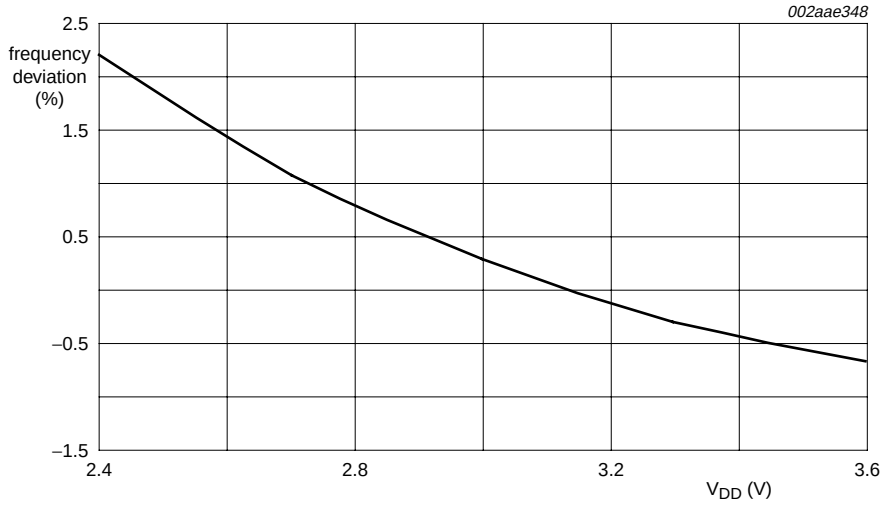

Central frequency of watchdog oscillator = 400 kHz

Fig 27. Average watchdog oscillator frequency vs. V_{DD} at +25 °C

© NXP B.V. 2009. All rights reserved.

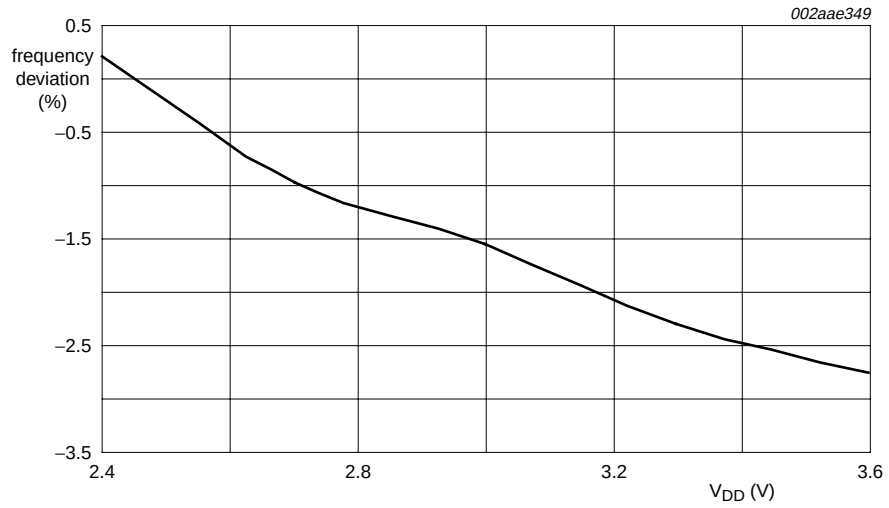

Central frequency of watchdog oscillator = 400 kHz

Fig 28. Average watchdog oscillator frequency vs. V_{DD} at −40 °C

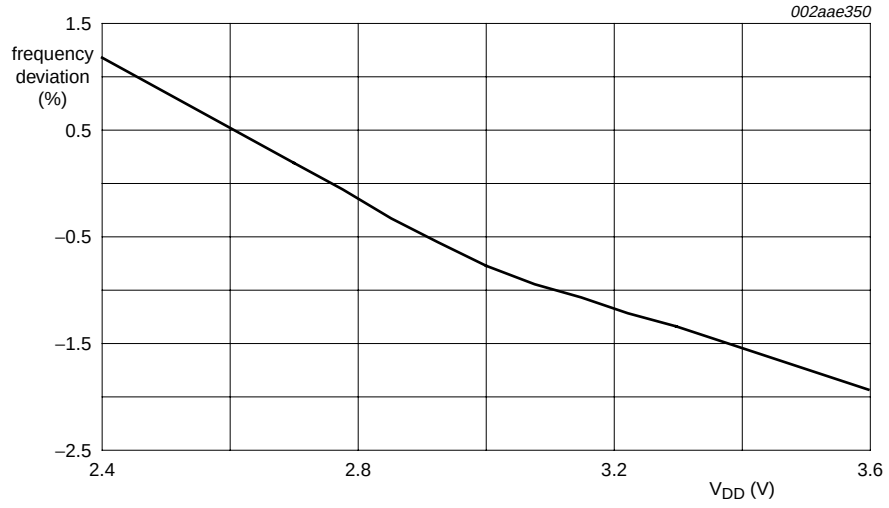

Central frequency of watchdog oscillator = 400 kHz

Fig 29. Average watchdog oscillator frequency vs. V_{DD} at +85 °C

© NXP B.V. 2009. All rights reserved.

9.3 BOD characteristics

Table 11. BOD static characteristics

V_{DD} = 2.4 V to 3.6 V unless otherwise specified.
T_{amb} = −40 °C to +85 °C for industrial applications, unless otherwise specified.

Symbol	Parameter	Conditions	Min	Typ[1]	Max	Unit
BOD interrupt						
V_{trip}	trip voltage	falling stage				
		BOICFG1, BOICFG0 = 01	2.25	-	2.55	V
		BOICFG1, BOICFG0 = 10	2.60	-	2.80	V
		BOICFG1, BOICFG0 = 11	3.10	-	3.40	V
		rising stage				
		BOICFG1, BOICFG0 = 01	2.30	-	2.60	V
		BOICFG1, BOICFG0 = 10	2.70	-	2.90	V
		BOICFG1, BOICFG0 = 11	3.15	-	3.45	V
BOD reset						
V_{trip}	trip voltage	falling stage				
		BOE1, BOE0 = 01	2.10	-	2.30	V
		BOE1, BOE0 = 10	2.25	-	2.55	V
		BOE1, BOE0 = 11	2.80	-	3.20	V
		rising stage				
		BOE1, BOE0 = 01	2.20	-	2.40	V
		BOE1, BOE0 = 10	2.30	-	2.60	V
		BOE1, BOE0 = 11	2.90	-	3.30	V
BOD EEPROM/flash						
V_{trip}	trip voltage	falling stage	2.25	-	2.55	V
		rising stage	2.30	-	2.60	V

[1] Typical ratings are not guaranteed. The values listed are at room temperature, 3 V.

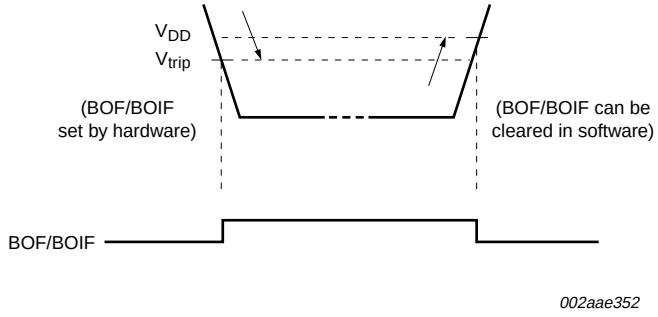

Fig 30. BOD interrupt/reset characteristics

© NXP B.V. 2009. All rights reserved.

10. Dynamic characteristics

Table 12. Dynamic characteristics (12 MHz)

V_{DD} = 2.4 V to 3.6 V unless otherwise specified.
T_{amb} = −40 °C to +85 °C for industrial applications, unless otherwise specified.[1][2]

Symbol	Parameter	Conditions	Variable clock		f_{osc} = 12 MHz		Unit
			Min	Max	Min	Max	
$f_{osc(RC)}$	internal RC oscillator frequency	nominal f = 7.3728 MHz trimmed to ± 1 % at T_{amb} = 25 °C; clock doubler option = OFF (default)	7.189	7.557	7.189	7.557	MHz
		nominal f = 14.7456 MHz; clock doubler option = ON, V_{DD} = 2.7 V to 3.6 V	14.378	15.114	14.378	15.114	MHz
$f_{osc(WD)}$	internal watchdog oscillator frequency	T_{amb} = 25 °C	380	420	380	420	kHz
f_{osc}	oscillator frequency		0	12	-	-	MHz
$T_{cy(clk)}$	clock cycle time	see Figure 32	83	-	-	-	ns
f_{CLKLP}	low-power select clock frequency		0	8	-	-	MHz
Glitch filter							
t_{gr}	glitch rejection time	P1.5/$\overline{\text{RST}}$ pin	-	50	-	50	ns
		any pin except P1.5/$\overline{\text{RST}}$	-	15	-	15	ns
t_{sa}	signal acceptance time	P1.5/$\overline{\text{RST}}$ pin	125	-	125	-	ns
		any pin except P1.5/$\overline{\text{RST}}$	50	-	50	-	ns
External clock							
t_{CHCX}	clock HIGH time	see Figure 32	33	$T_{cy(clk)} - t_{CLCX}$	33	-	ns
t_{CLCX}	clock LOW time	see Figure 32	33	$T_{cy(clk)} - t_{CHCX}$	33	-	ns
t_{CLCH}	clock rise time	see Figure 32	-	8	-	8	ns
t_{CHCL}	clock fall time	see Figure 32	-	8	-	8	ns
Shift register (UART mode 0)							
T_{XLXL}	serial port clock cycle time	see Figure 31	$16T_{cy(clk)}$	-	1333	-	ns
t_{QVXH}	output data set-up to clock rising edge time	see Figure 31	$13T_{cy(clk)}$	-	1083	-	ns
t_{XHQX}	output data hold after clock rising edge time	see Figure 31	-	$T_{cy(clk)}$ + 20	-	103	ns
t_{XHDX}	input data hold after clock rising edge time	see Figure 31	-	0	-	0	ns
t_{XHDV}	input data valid to clock rising edge time	see Figure 31	150	-	150	-	ns
SPI interface							
f_{SPI}	SPI operating frequency						
	slave		0	$CCLK/6$	0	2.0	MHz
	master		-	$CCLK/4$	-	3.0	MHz

© NXP B.V. 2009. All rights reserved.

Table 12. Dynamic characteristics (12 MHz) *…continued*

V_{DD} = 2.4 V to 3.6 V unless otherwise specified.

T_{amb} = −40 °C to +85 °C for industrial applications, unless otherwise specified.[1][2]

Symbol	Parameter	Conditions	Variable clock		f_{osc} = 12 MHz		Unit
			Min	Max	Min	Max	
T_{SPICYC}	SPI cycle time	see Figure 33, 34, 35, 36					
	slave		$^{6}/_{CCLK}$	-	500	-	ns
	master		$^{4}/_{CCLK}$	-	333	-	ns
$t_{SPILEAD}$	SPI enable lead time	see Figure 35, 36					
	slave		250	-	250	-	ns
t_{SPILAG}	SPI enable lag time	see Figure 35, 36					
	slave		250	-	250	-	ns
$t_{SPICLKH}$	SPICLK HIGH time	see Figure 33, 34, 35, 36					
	master		$^{2}/_{CCLK}$	-	165	-	ns
	slave		$^{3}/_{CCLK}$	-	250	-	ns
$t_{SPICLKL}$	SPICLK LOW time	see Figure 33, 34, 35, 36					
	master		$^{2}/_{CCLK}$	-	165	-	ns
	slave		$^{3}/_{CCLK}$	-	250	-	ns
t_{SPIDSU}	SPI data set-up time	see Figure 33, 34, 35, 36	100	-	100	-	ns
	master or slave						
t_{SPIDH}	SPI data hold time	see Figure 33, 34, 35, 36	100	-	100	-	ns
	master or slave						
t_{SPIA}	SPI access time	see Figure 35, 36					
	slave		0	120	0	120	ns
t_{SPIDIS}	SPI disable time	see Figure 35, 36					
	slave		0	240	-	240	ns
t_{SPIDV}	SPI enable to output data valid time	see Figure 33, 34, 35, 36					
	slave		-	240	-	240	ns
	master		-	167	-	167	ns
t_{SPIOH}	SPI output data hold time	see Figure 33, 34, 35, 36	0	-	0	-	ns
t_{SPIR}	SPI rise time	see Figure 33, 34, 35, 36					
	SPI outputs (SPICLK, MOSI, MISO)		-	100	-	100	ns
	SPI inputs (SPICLK, MOSI, MISO, $\overline{SS}$)		-	2000	-	2000	ns
t_{SPIF}	SPI fall time	see Figure 33, 34, 35, 36					
	SPI outputs (SPICLK, MOSI, MISO)		-	100	-	100	ns
	SPI inputs (SPICLK, MOSI, MISO, $\overline{SS}$)		-	2000	-	2000	ns

[1] Parameters are valid over operating temperature range unless otherwise specified.

[2] Parts are tested to 2 MHz, but are guaranteed to operate down to 0 Hz.

© NXP B.V. 2009. All rights reserved.

Table 13. Dynamic characteristics (18 MHz)

V_{DD} = 3.0 V to 3.6 V unless otherwise specified.
T_{amb} = −40 °C to +85 °C for industrial applications, unless otherwise specified.[1][2]

Symbol	Parameter	Conditions	Variable clock		f_{osc} = 18 MHz		Unit
			Min	Max	Min	Max	
$f_{osc(RC)}$	internal RC oscillator frequency	nominal f = 7.3728 MHz trimmed to ± 1 % at T_{amb} = 25 °C; clock doubler option = OFF (default)	7.189	7.557	7.189	7.557	MHz
		nominal f = 14.7456 MHz; clock doubler option = ON	14.378	15.114	14.378	15.114	MHz
$f_{osc(WD)}$	internal watchdog oscillator frequency	T_{amb} = 25 °C	380	420	380	420	kHz
f_{osc}	oscillator frequency		0	18	-	-	MHz
$T_{cy(clk)}$	clock cycle time	see Figure 32	55	-	-	-	ns
f_{CLKLP}	low-power select clock frequency		0	8	-	-	MHz
Glitch filter							
t_{gr}	glitch rejection time	P1.5/$\overline{RST}$ pin	-	50	-	50	ns
		any pin except P1.5/$\overline{RST}$	-	15	-	15	ns
t_{sa}	signal acceptance time	P1.5/$\overline{RST}$ pin	125	-	125	-	ns
		any pin except P1.5/$\overline{RST}$	50	-	50	-	ns
External clock							
t_{CHCX}	clock HIGH time	see Figure 32	22	$T_{cy(clk)} - t_{CLCX}$	22	-	ns
t_{CLCX}	clock LOW time	see Figure 32	22	$T_{cy(clk)} - t_{CHCX}$	22	-	ns
t_{CLCH}	clock rise time	see Figure 32	-	5	-	5	ns
t_{CHCL}	clock fall time	see Figure 32	-	5	-	5	ns
Shift register (UART mode 0)							
T_{XLXL}	serial port clock cycle time	see Figure 31	$16T_{cy(clk)}$	-	888	-	ns
t_{QVXH}	output data set-up to clock rising edge time	see Figure 31	$13T_{cy(clk)}$	-	722	-	ns
t_{XHQX}	output data hold after clock rising edge time	see Figure 31	-	$T_{cy(clk)}$ + 20	-	75	ns
t_{XHDX}	input data hold after clock rising edge time	see Figure 31	-	0	-	0	ns
t_{XHDV}	input data valid to clock rising edge time	see Figure 31	150	-	150	-	ns
SPI interface							
f_{SPI}	SPI operating frequency						
	slave		0	$^{CCLK}/_{6}$	0	3.0	MHz
	master		-	$^{CCLK}/_{4}$	-	4.5	MHz
T_{SPICYC}	SPI cycle time	see Figure 33, 34, 35, 36					
	slave		$^{6}/_{CCLK}$	-	333	-	ns
	master		$^{4}/_{CCLK}$	-	222	-	ns

© NXP B.V. 2009. All rights reserved.

Table 13. Dynamic characteristics (18 MHz) *…continued*

V_{DD} = 3.0 V to 3.6 V unless otherwise specified.

T_{amb} = −40 °C to +85 °C for industrial applications, unless otherwise specified.[1][2]

Symbol	Parameter	Conditions	Variable clock		f_{osc} = 18 MHz		Unit
			Min	Max	Min	Max	
$t_{SPILEAD}$	SPI enable lead time	see Figure 35, 36					
	slave		250	-	250	-	ns
t_{SPILAG}	SPI enable lag time	see Figure 35, 36					
	slave		250	-	250	-	ns
$t_{SPICLKH}$	SPICLK HIGH time	see Figure 33, 34, 35, 36					
	slave		$^{3}/_{CCLK}$	-	167	-	ns
	master		$^{2}/_{CCLK}$	-	111	-	ns
$t_{SPICLKL}$	SPICLK LOW time	see Figure 33, 34, 35, 36					
	slave		$^{3}/_{CCLK}$	-	167	-	ns
	master		$^{2}/_{CCLK}$	-	111	-	ns
t_{SPIDSU}	SPI data set-up time	see Figure 33, 34, 35, 36					
	master or slave		100	-	100	-	ns
t_{SPIDH}	SPI data hold time	see Figure 33, 34, 35, 36					
	master or slave		100	-	100	-	ns
t_{SPIA}	SPI access time	see Figure 35, 36					
	slave		0	80	0	80	ns
t_{SPIDIS}	SPI disable time	see Figure 35, 36					
	slave		0	160	-	160	ns
t_{SPIDV}	SPI enable to output data valid time	see Figure 33, 34, 35, 36					
	slave		-	160	-	160	ns
	master		-	111	-	111	ns
t_{SPIOH}	SPI output data hold time	see Figure 33, 34, 35, 36	0	-	0	-	ns
t_{SPIR}	SPI rise time	see Figure 33, 34, 35, 36					
	SPI outputs (SPICLK, MOSI, MISO)		-	100	-	100	ns
	SPI inputs (SPICLK, MOSI, MISO, $\overline{SS}$)		-	2000	-	2000	ns
t_{SPIF}	SPI fall time	see Figure 33, 34, 35, 36					
	SPI outputs (SPICLK, MOSI, MISO)		-	100	-	100	ns
	SPI inputs (SPICLK, MOSI, MISO, $\overline{SS}$)		-	2000	-	2000	ns

[1] Parameters are valid over operating temperature range unless otherwise specified.

[2] Parts are tested to 2 MHz, but are guaranteed to operate down to 0 Hz.

© NXP B.V. 2009. All rights reserved.

10.1 Waveforms

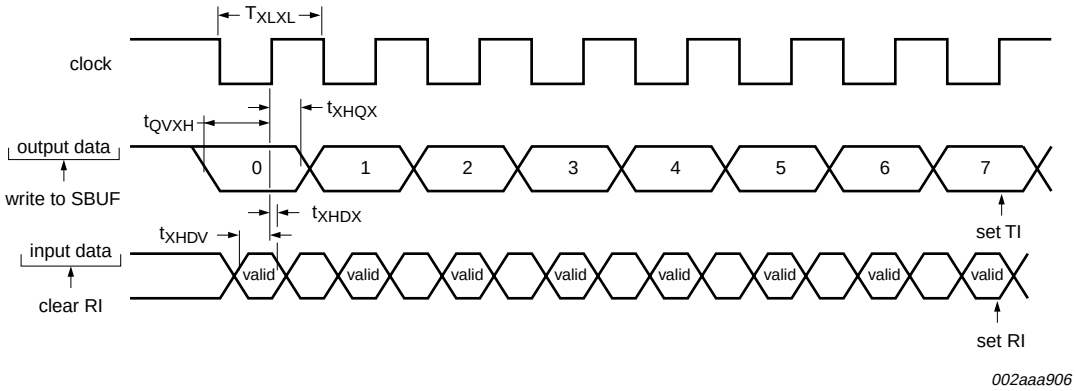

Fig 31. Shift register mode timing

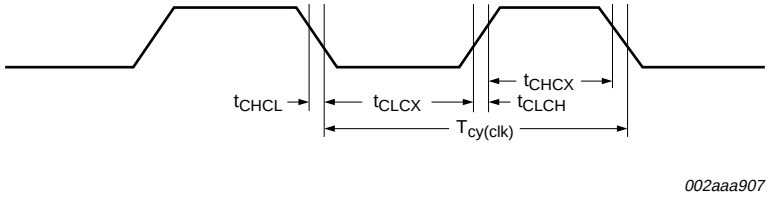

Fig 32. External clock timing (with an amplitude of at least $V_{i(RMS)}$ = 200 mV)

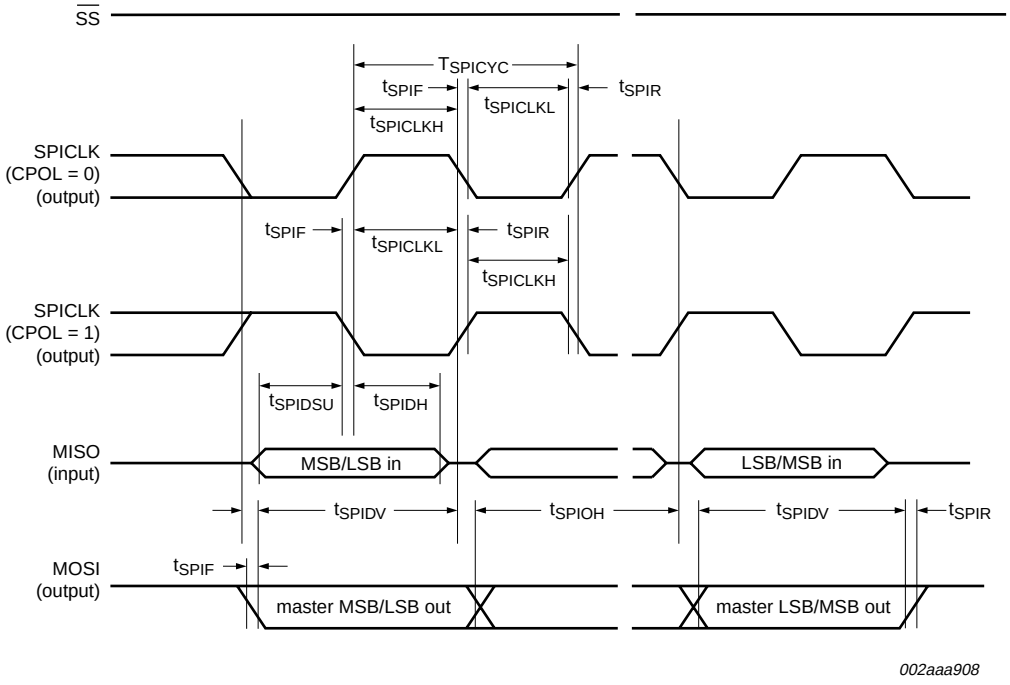

Fig 33. SPI master timing (CPHA = 0)

© NXP B.V. 2009. All rights reserved.

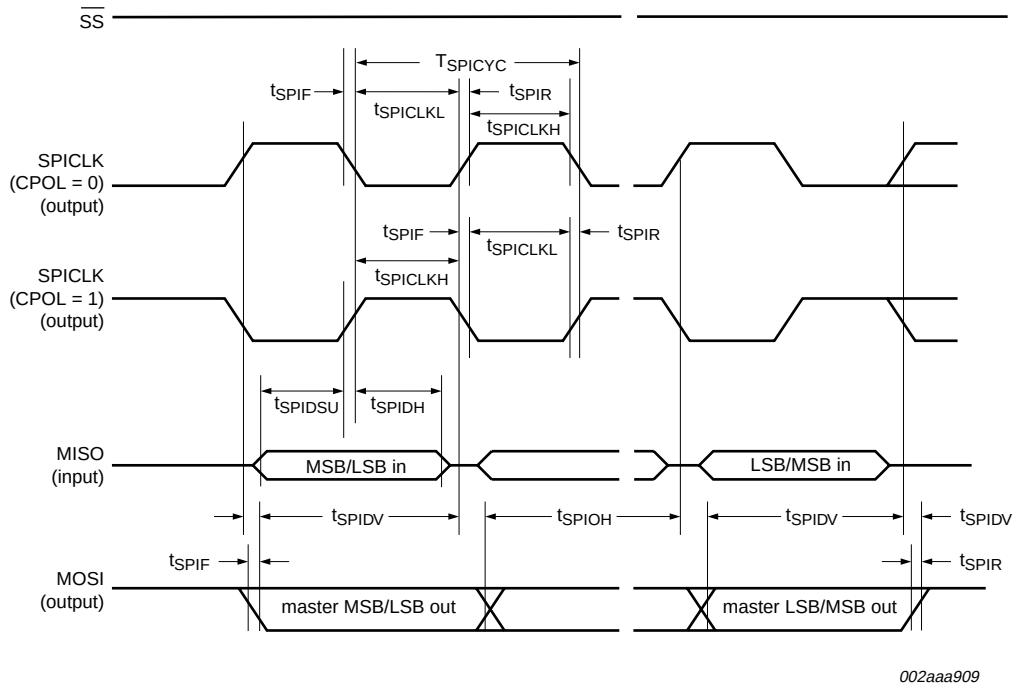

Fig 34. SPI master timing (CPHA = 1)

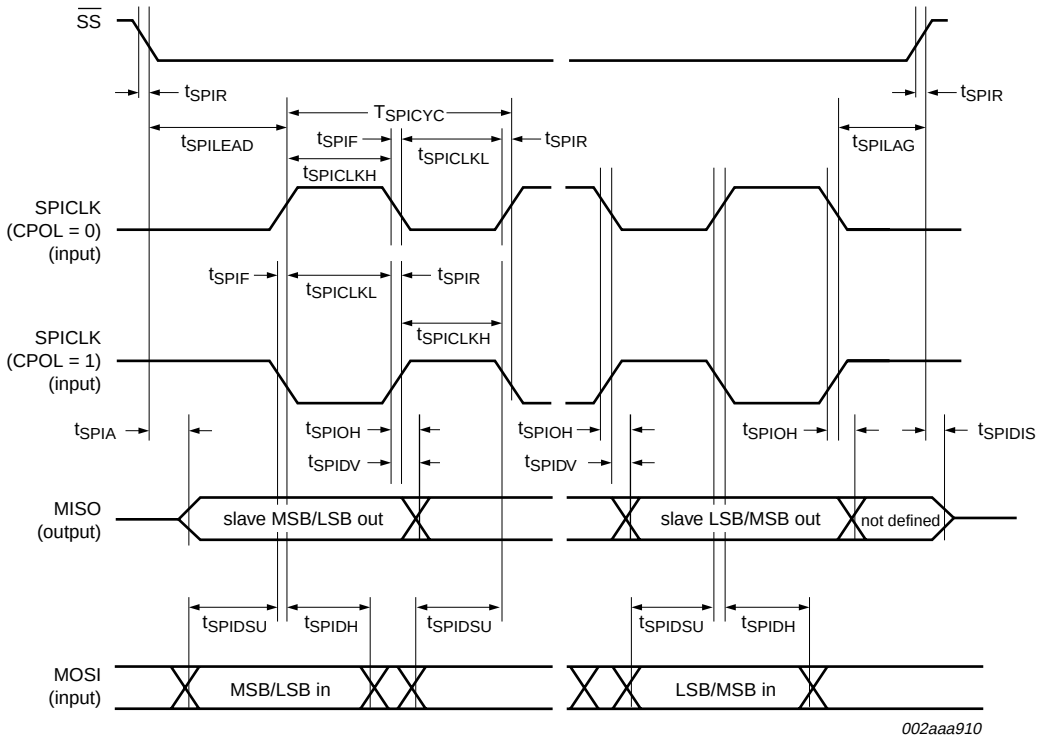

Fig 35. SPI slave timing (CPHA = 0)

© NXP B.V. 2009. All rights reserved.

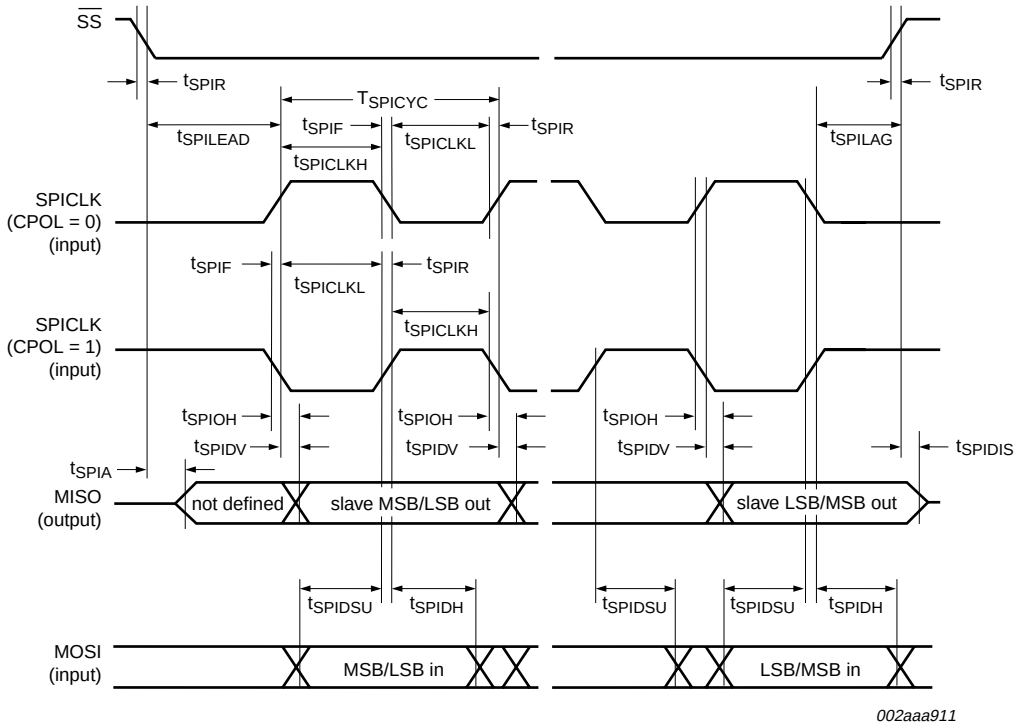

Fig 36. SPI slave timing (CPHA = 1)

10.2 ISP entry mode

Table 14. Dynamic characteristics, ISP entry mode

V_{DD} = 2.4 V to 3.6 V, unless otherwise specified.
T_{amb} = −40 °C to +85 °C for industrial applications, unless otherwise specified.

Symbol	Parameter	Conditions	Min	Typ	Max	Unit
t_{VR}	V_{DD} active to $\overline{RST}$ active delay time	pin $\overline{RST}$	50	-	-	µs
t_{RH}	$\overline{RST}$ HIGH time	pin $\overline{RST}$	1	-	32	µs
t_{RL}	$\overline{RST}$ LOW time	pin $\overline{RST}$	1	-	-	µs

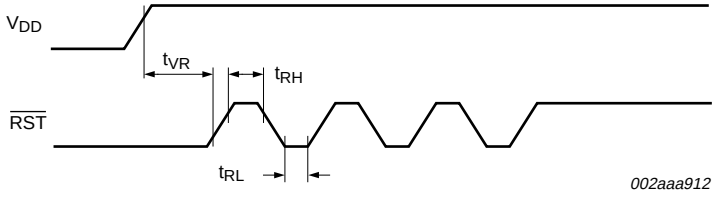

Fig 37. ISP entry waveform

© NXP B.V. 2009. All rights reserved.

11. Other characteristics

11.1 Comparator electrical characteristics

Table 15. Comparator electrical characteristics

V_{DD} = 2.4 V to 3.6 V, unless otherwise specified.
T_{amb} = −40 °C to +85 °C for industrial applications, unless otherwise specified.

Symbol	Parameter	Conditions	Min	Typ	Max	Unit
V_{IO}	input offset voltage		-	-	±20	mV
V_{IC}	common-mode input voltage		0	-	V_{DD} − 0.3	V
CMRR	common-mode rejection ratio	[1]	-	-	−50	dB
$t_{res(tot)}$	total response time		-	250	500	ns
$t_{(CE-OV)}$	chip enable to output valid time		-	-	10	µs
I_{LI}	input leakage current	0 V < V_I < V_{DD}	-	-	±10	µA

[1] This parameter is characterized, but not tested in production.

© NXP B.V. 2009. All rights reserved.

12. Package outline

TSSOP28: plastic thin shrink small outline package; 28 leads; body width 4.4 mm **SOT361-1**

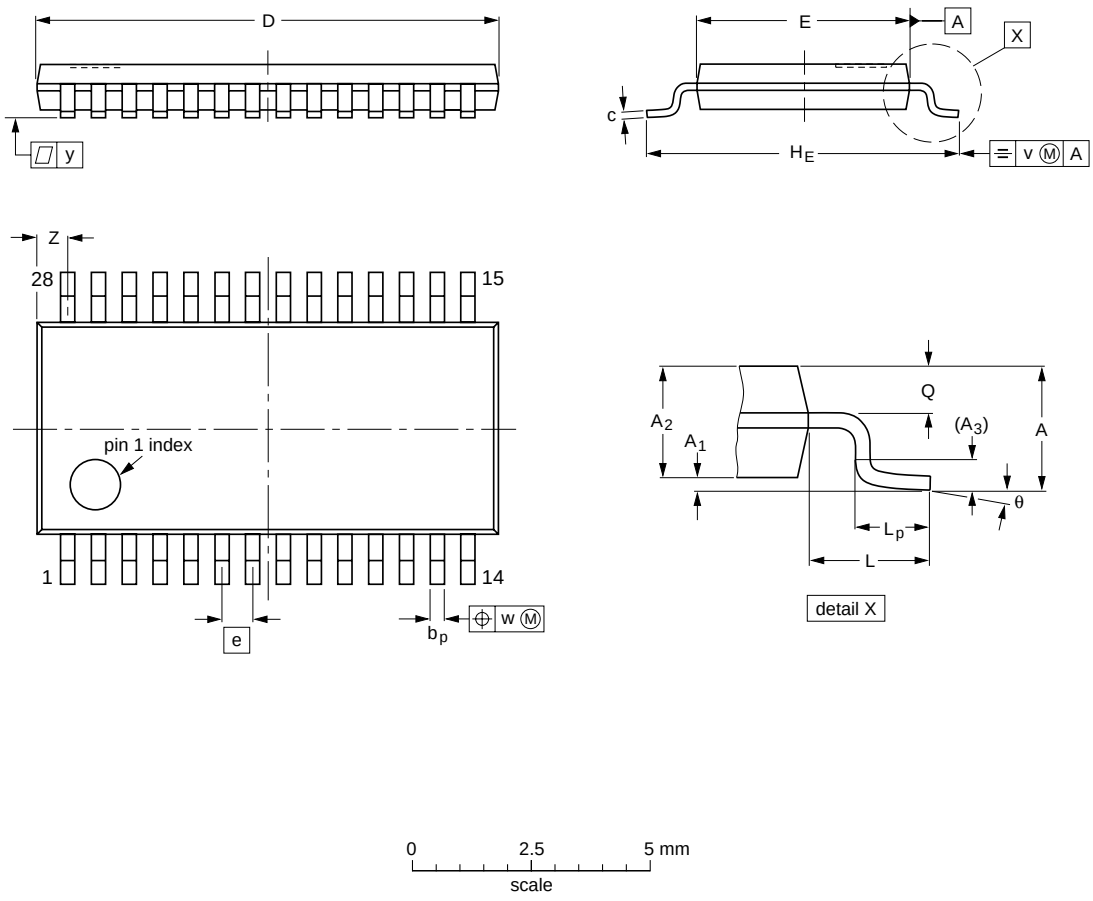

DIMENSIONS (mm are the original dimensions)

UNIT	A max.	A_1	A_2	A_3	b_p	c	D (1)	E (2)	e	H_E	L	L_p	Q	v	w	y	Z (1)	θ
mm	1.1	0.15 0.05	0.95 0.80	0.25	0.30 0.19	0.2 0.1	9.8 9.6	4.5 4.3	0.65	6.6 6.2	1	0.75 0.50	0.4 0.3	0.2	0.13	0.1	0.8 0.5	8° 0°

Notes

1. Plastic or metal protrusions of 0.15 mm maximum per side are not included.
2. Plastic interlead protrusions of 0.25 mm maximum per side are not included.

OUTLINE VERSION	REFERENCES				EUROPEAN PROJECTION	ISSUE DATE
	IEC	JEDEC	JEITA			
SOT361-1		MO-153				~~99-12-27~~ 03-02-19

Fig 38. TSSOP package outline (SOT361-1)

© NXP B.V. 2009. All rights reserved.

13. Abbreviations

Table 16. Abbreviations

Acronym	Description
BOD	Brownout Detection
CCU	Capture/Compare Unit
CPU	Central Processing Unit
CRC	Cyclic Redundancy Check
DAC	Digital to Analog Converter
EPROM	Erasable Programmable Read-Only Memory
EEPROM	Electrically Erasable Programmable Read-Only Memory
EMI	Electro-Magnetic Interference
PGA	Programmable Gain Amplifier
PLL	Phase-Locked Loop
PWM	Pulse-Width Modulator
RAM	Random Access Memory
RC	Resistance-Capacitance
RTC	Real-Time Clock
SAR	Successive Approximation Register
SFR	Special Function Register
SPI	Serial Peripheral Interface
UART	Universal Asynchronous Receiver/Transmitter
WDT	WatchDog Timer

© NXP B.V. 2009. All rights reserved.

14. Revision history

Table 17. Revision history

Document ID	Release date	Data sheet status	Change notice	Supersedes
P89LPC9301_931A1_1	20090409	Preliminary data sheet	-	-

© NXP B.V. 2009. All rights reserved.

15. Legal information

15.1 Data sheet status

Document status[1][2]	Product status[3]	Definition
Objective [short] data sheet	Development	This document contains data from the objective specification for product development.
Preliminary [short] data sheet	Qualification	This document contains data from the preliminary specification.
Product [short] data sheet	Production	This document contains the product specification.

[1] Please consult the most recently issued document before initiating or completing a design.

[2] The term 'short data sheet' is explained in section "Definitions".

[3] The product status of device(s) described in this document may have changed since this document was published and may differ in case of multiple devices. The latest product status information is available on the Internet at URL http://www.nxp.com.

15.2 Definitions

Draft — The document is a draft version only. The content is still under internal review and subject to formal approval, which may result in modifications or additions. NXP Semiconductors does not give any representations or warranties as to the accuracy or completeness of information included herein and shall have no liability for the consequences of use of such information.

Short data sheet — A short data sheet is an extract from a full data sheet with the same product type number(s) and title. A short data sheet is intended for quick reference only and should not be relied upon to contain detailed and full information. For detailed and full information see the relevant full data sheet, which is available on request via the local NXP Semiconductors sales office. In case of any inconsistency or conflict with the short data sheet, the full data sheet shall prevail.

15.3 Disclaimers

General — Information in this document is believed to be accurate and reliable. However, NXP Semiconductors does not give any representations or warranties, expressed or implied, as to the accuracy or completeness of such information and shall have no liability for the consequences of use of such information.

Right to make changes — NXP Semiconductors reserves the right to make changes to information published in this document, including without limitation specifications and product descriptions, at any time and without notice. This document supersedes and replaces all information supplied prior to the publication hereof.

Suitability for use — NXP Semiconductors products are not designed, authorized or warranted to be suitable for use in medical, military, aircraft, space or life support equipment, nor in applications where failure or malfunction of an NXP Semiconductors product can reasonably be expected to result in personal injury, death or severe property or environmental damage. NXP Semiconductors accepts no liability for inclusion and/or use of NXP Semiconductors products in such equipment or applications and therefore such inclusion and/or use is at the customer's own risk.

Applications — Applications that are described herein for any of these products are for illustrative purposes only. NXP Semiconductors makes no representation or warranty that such applications will be suitable for the specified use without further testing or modification.

Limiting values — Stress above one or more limiting values (as defined in the Absolute Maximum Ratings System of IEC 60134) may cause permanent damage to the device. Limiting values are stress ratings only and operation of the device at these or any other conditions above those given in the Characteristics sections of this document is not implied. Exposure to limiting values for extended periods may affect device reliability.

Terms and conditions of sale — NXP Semiconductors products are sold subject to the general terms and conditions of commercial sale, as published at http://www.nxp.com/profile/terms, including those pertaining to warranty, intellectual property rights infringement and limitation of liability, unless explicitly otherwise agreed to in writing by NXP Semiconductors. In case of any inconsistency or conflict between information in this document and such terms and conditions, the latter will prevail.

No offer to sell or license — Nothing in this document may be interpreted or construed as an offer to sell products that is open for acceptance or the grant, conveyance or implication of any license under any copyrights, patents or other industrial or intellectual property rights.

Export control — This document as well as the item(s) described herein may be subject to export control regulations. Export might require a prior authorization from national authorities.

15.4 Trademarks

Notice: All referenced brands, product names, service names and trademarks are the property of their respective owners.

I²C-bus — logo is a trademark of NXP B.V.

16. Contact information

For more information, please visit: **http://www.nxp.com**

For sales office addresses, please send an email to: **salesaddresses@nxp.com**

© NXP B.V. 2009. All rights reserved.

17. Contents

1 General description 1
2 Features 1
2.1 Principal features 1
2.2 Additional features 1
3 Ordering information 3
3.1 Ordering options 3
4 Block diagram 4
5 Functional diagram 5
6 Pinning information 6
6.1 Pinning 6
6.2 Pin description 7
7 Functional description 10
7.1 Special function registers 10
7.2 Enhanced CPU 18
7.3 Clocks 18
7.3.1 Clock definitions 18
7.3.2 CPU clock (OSCCLK) 18
7.4 Crystal oscillator option 18
7.4.1 Low speed oscillator option 18
7.4.2 Medium speed oscillator option 18
7.4.3 High speed oscillator option 18
7.5 Clock output 19
7.6 On-chip RC oscillator option 19
7.7 Watchdog oscillator option 19
7.8 External clock input option 19
7.9 Clock sources switch on the fly 19
7.10 CCLK wake-up delay 20
7.11 CCLK modification: DIVM register 20
7.12 Low power select 20
7.13 Memory organization 21
7.14 Data RAM arrangement 21
7.15 Interrupts 21
7.15.1 External interrupt inputs 22
7.16 I/O ports 23
7.16.1 Port configurations 23
7.16.1.1 Quasi-bidirectional output configuration 23
7.16.1.2 Open-drain output configuration 23
7.16.1.3 Input-only configuration 24
7.16.1.4 Push-pull output configuration 24
7.16.2 Port 0 analog functions 24
7.16.3 Additional port features 24
7.17 Power monitoring functions 24
7.17.1 Brownout detection 25
7.17.2 Power-on detection 25
7.18 Power reduction modes 25
7.18.1 Idle mode 25
7.18.2 Power-down mode 25
7.18.3 Total Power-down mode 26
7.19 Reset 26
7.19.1 Reset vector 26
7.20 Timers/counters 0 and 1 27
7.20.1 Mode 0 27
7.20.2 Mode 1 27
7.20.3 Mode 2 27
7.20.4 Mode 3 27
7.20.5 Mode 6 27
7.20.6 Timer overflow toggle output 27
7.21 RTC/system timer 28
7.22 UART 28
7.22.1 Mode 0 28
7.22.2 Mode 1 28
7.22.3 Mode 2 28
7.22.4 Mode 3 29
7.22.5 Baud rate generator and selection 29
7.22.6 Framing error 29
7.22.7 Break detect 29
7.22.8 Double buffering 29
7.22.9 Transmit interrupts with double buffering enabled (modes 1, 2 and 3) 30
7.22.10 The 9th bit (bit 8) in double buffering (modes 1, 2 and 3) 30
7.23 I^{2}C-bus serial interface 30
7.24 SPI 32
7.24.1 Typical SPI configurations 33
7.25 Analog comparators 34
7.25.1 Internal reference voltage 35
7.25.2 Comparator interrupt 35
7.25.3 Comparators and power reduction modes . . . 35
7.26 KBI 36
7.27 Watchdog timer 36
7.28 Additional features 37
7.28.1 Software reset 37
7.28.2 Dual data pointers 37
7.29 Flash program memory 37
7.29.1 General description 37
7.29.2 Features 38
7.29.3 Flash organization 38
7.29.4 Using flash as data storage 38
7.29.5 Flash programming and erasing 38
7.29.6 ICP 39
7.29.7 IAP 39
7.29.8 ISP 39
7.29.9 Power-on reset code execution 39
7.29.10 Hardware activation of the bootloader 40
7.30 User configuration bytes 40

continued >>

© NXP B.V. 2009. All rights reserved.

7.31 User sector security bytes 40
8 Limiting values 41
9 Static characteristics 42
9.1 Current characteristics 44
9.2 Internal RC/watchdog oscillator characteristics 48
9.3 BOD characteristics 51
10 Dynamic characteristics 52
10.1 Waveforms 56
10.2 ISP entry mode 58
11 Other characteristics 59
11.1 Comparator electrical characteristics 59
12 Package outline 60
13 Abbreviations 61
14 Revision history 62
15 Legal information 63
15.1 Data sheet status 63
15.2 Definitions 63
15.3 Disclaimers 63
15.4 Trademarks 63
16 Contact information 63
17 Contents 64

Please be aware that important notices concerning this document and the product(s) described herein, have been included in section 'Legal information'.

© NXP B.V. 2009. **All rights reserved.**

For more information, please visit: http://www.nxp.com
For sales office addresses, please send an email to: salesaddresses@nxp.com

Date of release: 9 April 2009
Document identifier: P89LPC9301_931A1_1

founded by
PHILIPS