DATA SHEET

P82C150
CAN Serial Linked I/O device (SLIO) with digital and analog port functions

Preliminary specification
Supersedes data of 1995 Oct 11
File under Integrated Circuits, IC18

1996 Jun 19

Philips Semiconductors

PHILIPS

CONTENTS

1 FEATURES
2 GENERAL DESCRIPTION
3 ORDERING INFORMATION
4 BLOCK DIAGRAM
5 FUNCTIONAL DIAGRAM
6 PINNING INFORMATION
6.1 Pinning
6.2 Pin description
7 FUNCTIONAL DESCRIPTION
7.1 I/O functions
7.2 I/O registers
7.3 CAN functions
7.4 Initialization
7.5 P82C150 operation after RESET or change of bus mode
8 LIMITING VALUES
9 DC CHARACTERISTICS
10 AC CHARACTERISTICS
11 APPLICATION INFORMATION
11.1 Maximum bus length
11.2 Start up sequence
11.3 External oscillator mode
11.4 Using digital I/O port functions
11.5 Using DPM
11.6 Using ADC
11.7 Using analog input port functions
11.8 CAN-bus system applications
12 PACKAGE OUTLINE
13 SOLDERING
13.1 Introduction
13.2 Reflow soldering
13.3 Wave soldering
13.4 Repairing soldered joints
14 DEFINITIONS
15 LIFE SUPPORT APPLICATIONS

CAN Serial Linked I/O device (SLIO) with digital and analog port functions

P82C150

1 FEATURES

- Single-chip I/O device with CAN protocol controller
- Meets CAN protocol specification version 2.0 A and B (passive) with restricted bit timing
- Fully integrated clock oscillator (no crystal required)
- 16 configurable digital or analog I/O port pins
- Each of the port pins individually configurable via CAN-bus: port direction, port mode and event capture facilities for inputs (event driven or polling)
- Up to sixteen digital inputs; automatic transmission of a CAN message on a change on inputs individually selectable
- Up to sixteen 3-state outputs
- Up to two quasi-analog outputs with 10-bit accuracy
- 10-bit analog-to-digital converter with up to six multiplexed analog input channels (for accuracy see Section 11.6)
- Two general purpose comparators
- Bit rate from 20 kbit/s up to 125 kbit/s using internal oscillator
- Automatic bit rate detection and calibration
- Up to sixteen P82C150 nodes for one CAN-bus system
- Four identifier bits programmable
- SLIO functions controlled by a single intelligent node (‘host’)
- Sleep-mode with wake-up via CAN-bus
- Differential CAN-bus input comparator and CAN-bus output driver
- Supply voltage: 5 V ±4%
- Operating temperature: two ranges –40 to +85 °C and –40 to +125 °C.

2 GENERAL DESCRIPTION

The P82C150 is a single-chip 16-bit I/O device including a Controller Area Network (CAN) protocol controller with automatic bit rate detection and calibration. It features 16 configurable I/O port pins with programmable direction, digital and analog modes.

The P82C150 provides a configurable event capture facility supporting automatic transmission caused by a change on the port input pins.

The clock oscillator requires no external components, thus, the cost of the CAN link is reduced significantly.

The P82C150 is a very cost-effective way to increase the I/O capability of a microcontroller based CAN node as well as to reduce the amount and complexity of wiring. Advanced safety is provided by the CAN protocol.

Applications:

- Body electronics and instrumentation in automotive applications
- Sensor/actuator interface in automotive and general industrial applications
- Extension of I/O capabilities of microcontroller based CAN nodes.

3 ORDERING INFORMATION

TYPE NUMBER	PACKAGE			TEMPERATURE RANGE (°C)
	NAME	DESCRIPTION	VERSION	
P82C150 AFT	SO28	plastic small outline package; 28 leads; body width 7.5 mm	SOT136-1	–40 to +85
P82C150 AHT				–40 to +125

4 BLOCK DIAGRAM

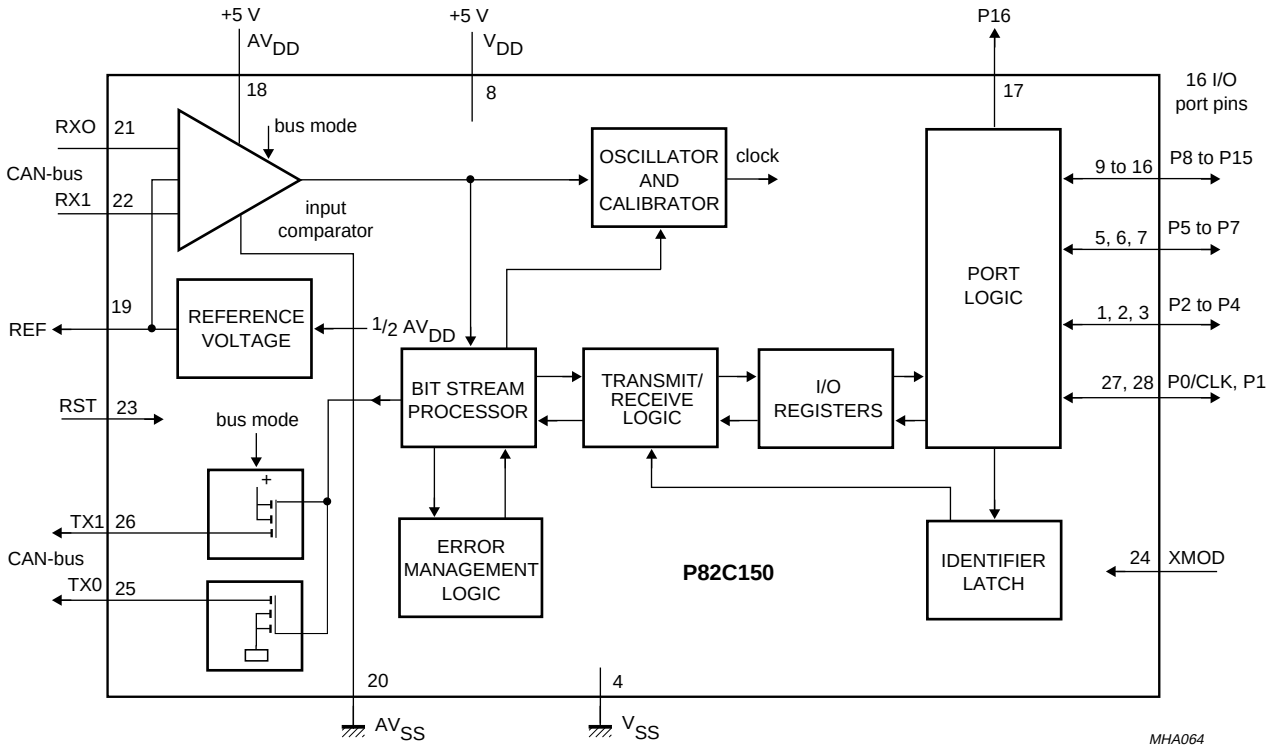

Fig.1 Block diagram.

5 FUNCTIONAL DIAGRAM

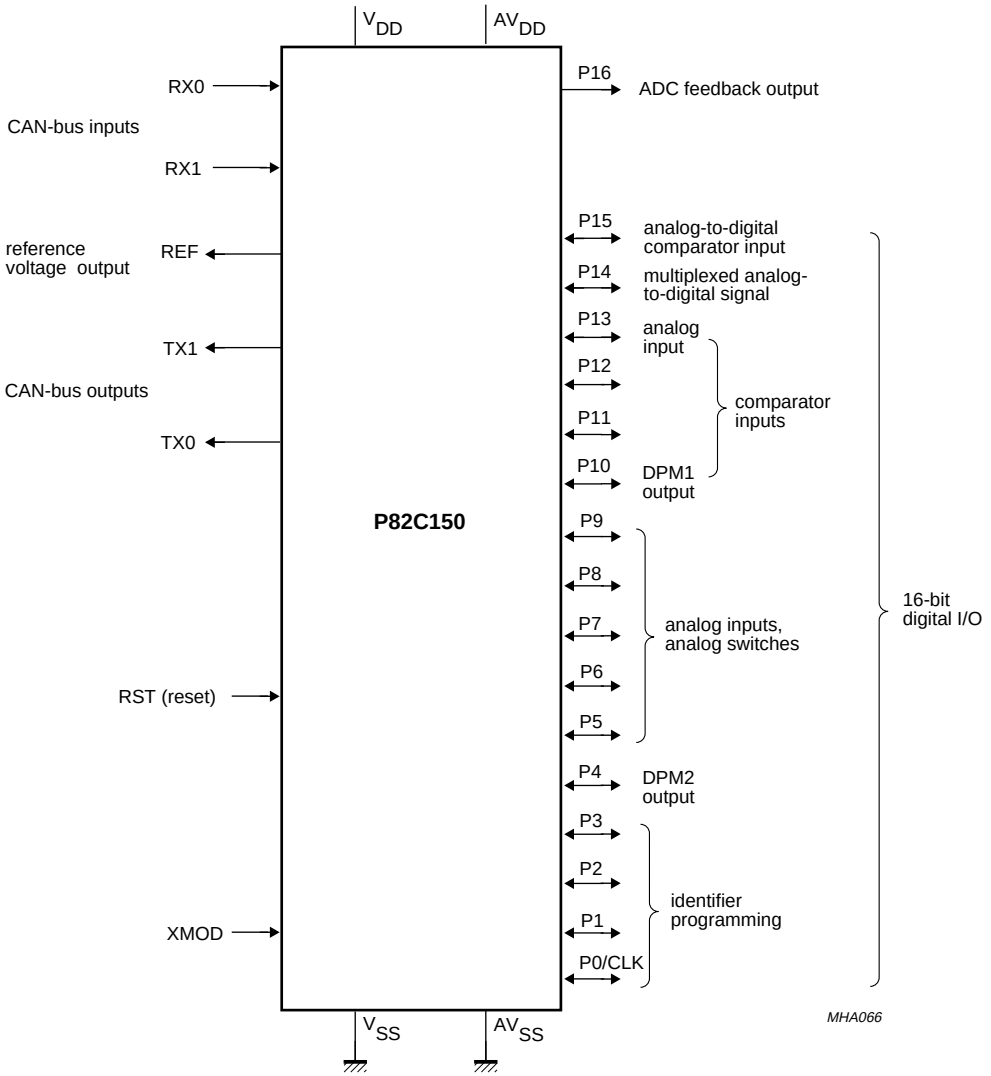

Fig.2 Functional diagram.

6 PINNING INFORMATION

6.1 Pinning

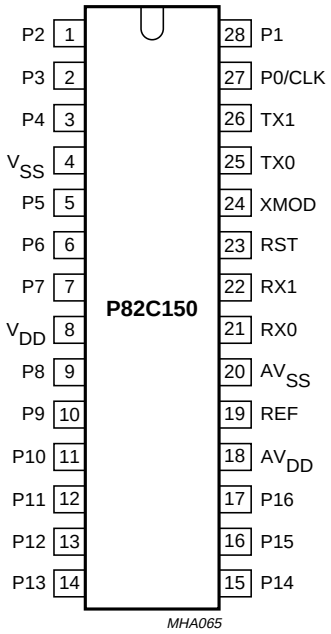

Fig.3 Pin configuration.

6.2 Pin description

Table 1 Pin description for P82C150; SO28; see note 1

SYMBOL	PIN	DESCRIPTION
P2	1	**I/O Ports P2 to P3;** Identifier programming input.
P3	2	
P4	3	**I/O Port 4;** DPM2 output.
V_{SS}	4	**Ground**, digital part (0 V; logic circuits and CAN-bus driver).
P5	5	**I/O Ports P5 to P6;** analog input.
P6	6	
P7	7	**I/O Port 7;** analog input or analog-to-digital comparator 1 output.
V_{DD}	8	**Power supply,** digital part (+5 V; logic circuits and CAN-bus driver).
P8	9	**I/O Port 8;** analog input or comparator 3 output.
P9	10	**I/O Port 9;** analog input or comparator 2 output.
P10	11	**I/O Port 10;** comparator 3 inverting input or DPM1 output.
P11	12	**I/O Port 11;** comparator 3 non-inverting input.
P12	13	**I/O Port 12;** comparator 2 inverting input.
P13	14	**I/O Port 13;** comparator 2 non-inverting input.
P14	15	**I/O Port 14;** multiplexed analog signal.
P15	16	**I/O Port 15;** analog-to-digital comparator input.
P16	17	**Feedback output** of analog-to-digital converter.
AV_{DD}	18	**Power supply,** analog part (+5 V; CAN input, oscillator and reference).
REF	19	**Reference voltage output** ($\frac{1}{2} \times AV_{DD}$).
AV_{SS}	20	**Ground**, analog part (0 V; CAN input, oscillator, reference).
RX0	21	**CAN-bus input.**
RX1	22	
RST	23	**External reset input** (active-HIGH) for internal oscillator mode; pulled to **+**5 V for external oscillator mode (see Section 11.3).
XMOD	24	**Connected to GND for internal oscillator mode**; external reset input (active-LOW) for external oscillator mode (see Section 11.3).
TX0	25	**Open-drain CAN-bus output:** dominant = LOW; recessive = floating.
TX1	26	**Open-drain CAN-bus output:** dominant = HIGH; recessive or at bus mode 2 floating.
P0/CLK	27	**I/O Port P0**, Identifier programming input in internal oscillator mode; clock input in external oscillator mode (see Section 11.3).
P1	28	**I/O Port P1;** identifier programming input.

Note

1. In this documentation the port pins are referred to by their symbols, not by their pin number. For example P15 means I/O Port 15 at pin 16.

7 FUNCTIONAL DESCRIPTION

7.1 I/O functions

The P82C150 provides 16 port pins (P15 to P0) which are individually configurable via CAN-bus. Besides the digital I/O functions some of these port pins provide analog I/O functions.

7.1.1 DIGITAL INPUT FUNCTIONS

Input levels HIGH and LOW on the port pins (P15 to P0) can be read in two ways by the host node:

- **Polling:** a Remote Frame is sent to the P82C150 to be answered by a Data Frame containing the Data Input Register contents.
- **Event capture:** in case of edge-triggered mode, the P82C150 sends the same Data Frame caused by the event of a rising and/or falling edge on the corresponding port pins (see Table 3).

7.1.2 DIGITAL OUTPUT FUNCTIONS

The Data Output Register is set via a CAN message. Its content is only output when the corresponding bits of the Output Enable Register are set to logic 1s.

7.1.3 ANALOG INPUT/OUTPUT FUNCTIONS

- Up to six multiplexed analog input signals for analog-to-digital conversion or general purpose
- Up to two quasi-analog output channels (DPM; Distributed Pulse Modulation)
- Two input comparators, for example for window comparator applications
- A separate analog-to-digital input comparator with feedback output.

Analog-to-digital converted digital results are obtained by reading the Analog-to-Digital Conversion (ADC) Register. Analog functions of each port pin are individually controlled by the Analog Configuration Register.

Writing the I/O registers is done serially via CAN-bus by Data Frames. The first data byte contains the register address, and the second and third data bytes represent the register contents. If a read only register is addressed, the contents of the second and third data bytes are ignored.

It is recommended to set unused port pins to HIGH (100 kΩ resistor to V_{DD}).

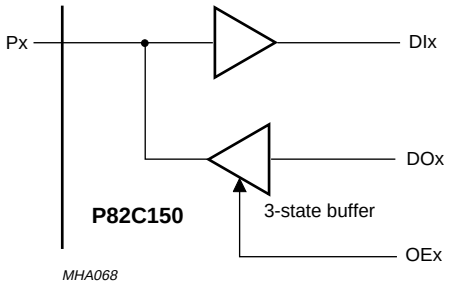

Fig.4 I/O port pins.

7.2 I/O registers

Table 2 I/O register map

15 (MSB)	14	13	12	11	10	9	8	7	6	5	4	3	2	1	0 (LSB)
ADDRESS 0: DATA INPUT															
DI15	DI14	DI13	DI12	DI11	DI10	DI9	DI8	DI7	DI6	DI5	DI4	DI3	DI2	DI1	DI0
ADDRESS 1: POSITIVE EDGE															
PE15	PE14	PE13	PE12	PE11	PE10	PE9	PE8	PE7	PE6	PE5	PE4	PE3	PE2	PE1	PE0
ADDRESS 2: NEGATIVE EDGE															
NE15	NE14	NE13	NE12	NE11	NE10	NE9	NE8	NE7	NE6	NE5	NE4	NE3	NE2	NE1	NE0
ADDRESS 3: DATA OUTPUT															
DO15	DO14	DO13	DO12	DO11	DO10	DO9	DO8	DO7	DO6	DO5	DO4	DO3	DO2	DO1	DO0
ADDRESS 4: OUTPUT ENABLE															
OE15	OE14	OE13	OE12	OE11	OE10	OE9	OE8	OE7	OE6	OE5	OE4	OE3	OE2	OE1	OE0
ADDRESS 5: ANALOG CONFIGURATION															
ADC	OC3	OC2	OC1	0	M3	M2	M1	SW3	SW2	SW1	0	0	0	0	0
ADDRESS 6: DPM1															
DP9	DP8	DP7	DP6	DP5	DP4	DP3	DP2	DP1	DP0	0	0	0	0	0	0
ADDRESS 7: DPM2															
DQ9	DQ8	DQ7	DQ6	DQ5	DQ4	DQ3	DQ2	DQ1	DQ0	0	0	0	0	0	0
ADDRESS 8: ANALOG-TO-DIGITAL CONVERSION (ADC)															
AD9	AD8	AD7	AD6	AD5	AD4	AD3	AD2	AD1	AD0	0	0	0	0	0	0

7.2.1 Data Input Register (Address 0)

This read only register contains the states of port pins P15 to P0 which are transmitted on request, or automatically by change of one of the input levels, provided that the respective input is configured to event capture mode (see Table 3). When an edge is detected the port state is loaded into the transmit buffer after the Control Field of the triggered message is sent. Therefore a delay for input settling is provided. If between edge detection and transmission of the data input register another input signal change at the input port occurs, the corresponding data input register bit is overwritten by the current input port value. Additionally the register content is sent automatically after wake-up or bus mode change, once the bit time has been calibrated (part of the 'sign-on' message).

7.2.2 Positive Edge Register (Address 1)

This write only register contains configuration information per port pin for the event capture facility.
The corresponding PE-bit (see Table 3) has to be set to logic 1 to enable capturing of the rising edge.

7.2.3 Negative Edge Register (Address 2)

This write only register contains configuration information per port pin for the event capture facility.
The corresponding NE-bit (see Table 3) has to be set to logic 1 to enable capturing of the falling edge.

The combination of PE and NE functions is possible.

7.2.4 Data Output Register (Address 3)

This write only register contains the output data for the port pins. The output drivers are bitwise enabled by OE (see Section 7.2.5). New data for the output port register are processed and written to the output ports directly after the corresponding CAN message to the P82C150 is successfully checked and becomes valid.

7.2.5 Output Enable Register (Address 4)

This write only register controls the output drivers of the port pins. The corresponding Output Enable Register bit has to be set to logic 1 to enable an output driver. If set to logic 0, the corresponding output driver is disabled (floating; see Fig.7).

Table 3 Programming of the I/O registers to event capture on edge or to digital output
X = don' t care; n = 0 to 15.

FUNCTION	REGISTER CONTENTS OF PARTICULAR PORT PIN		
	POSITIVE EDGE (BITS PEn)	NEGATIVE EDGE (BITS NEn)	OUTPUT ENABLE (BITS OEn)
Digital output	X	X	1
Digital input			
Polling	X	X	X
Event capture on edge			
Rising	1	0	X
Falling	0	1	X
Rising and Falling	1	1	X

7.2.6 Analog Configuration Register (Address 5)

This read/write register contains the bits ADC, OC3 to OC1, M3 to M1 and SW3 to SW1 (see Fig.7).

- ADC bit (analog-to-digital conversion start bit; write only bit). The P82C150 starts an analog-to-digital conversion cycle at ADC = 1 ended with the transmission of a message containing the result. After that, the ADC bit is reset automatically.
- OC3 to OC1 bits (comparator output data; read only bits). The bits OC3 to OC1 represent the logical output level of the analog comparators at input port pins P10, P11, P12, P13 and P15. The P82C150 sends back the logical output value of these comparators after having received a Data Frame (see Section 7.3.3) addressing the Analog Configuration Register. The comparator outputs can be monitored at the output port pins P8, P9 and P7.
- M3 to M1 bits (multiplexer control bits; write only bits). The logical value of the comparators is monitored on port pins P8, P9 and P7 (see Fig.7) by setting M3 to M1 to logic 1, provided that these pins are configured as outputs (OE = 1). Additionally the register content is sent automatically when the corresponding port bits in the Positive Edge Register and/or Negative Edge Register and the corresponding bits in the Output Enable Register are set.
- SW3 to SW1 (analog switch control bits; write only bits). One of the analog switches S1 to S6 can be closed by setting the switch bits to the corresponding value (see Fig.7 and Table 4).

Table 4 Analog switch selection by SW3, SW2, SW1.

SW3	SW2	SW1	SWITCH STATE
0	0	0	no switch closed (S0); note 1
0	0	1	S1 closed
0	1	0	S2 closed
0	1	1	S3 closed
1	0	0	S4 closed
1	0	1	S5 closed
1	1	0	S6 closed
1	1	1	reserved

Note

1. Evidently if P14 is driven, it may not be connected to any other driven pin via the internal analog switches (avoid short-circuit!).

7.2.7 DPM1 Register (Address 6)

This write only register contains data for a quasi-analog output signal on port pin P10, which is generated by Distributed Pulse Modulation (DPM; see Fig.9).
The Output Enable bit must be set for this functions (OE10 = 1). The DPM1 output signal is inverted by setting DO10 = 1. The number of output pulses during a DPM period is given by the DPM1 Register value. These pulses have $4 \times t_{CLK}$ length and are distributed over the DPM period. An analog voltage is provided after smoothing the output signal by an external RC combination.

7.2.8 DPM2 Register (Address 7)

This write only register contains data for a quasi-analog output signal on port pin P4. The function of the DPM2 corresponds to the definition of DPM1.

7.2.9 Analog-to-Digital Conversion (ADC) Register (Address 8)

This read only register contains the result of the analog-to-digital converted level of that I/O pin which was selected by the SW bits. The conversion is started by ADC-bit set to logic 1 (see Section 7.2.6), or by transmitting a Data Frame addressing the ADC Register.

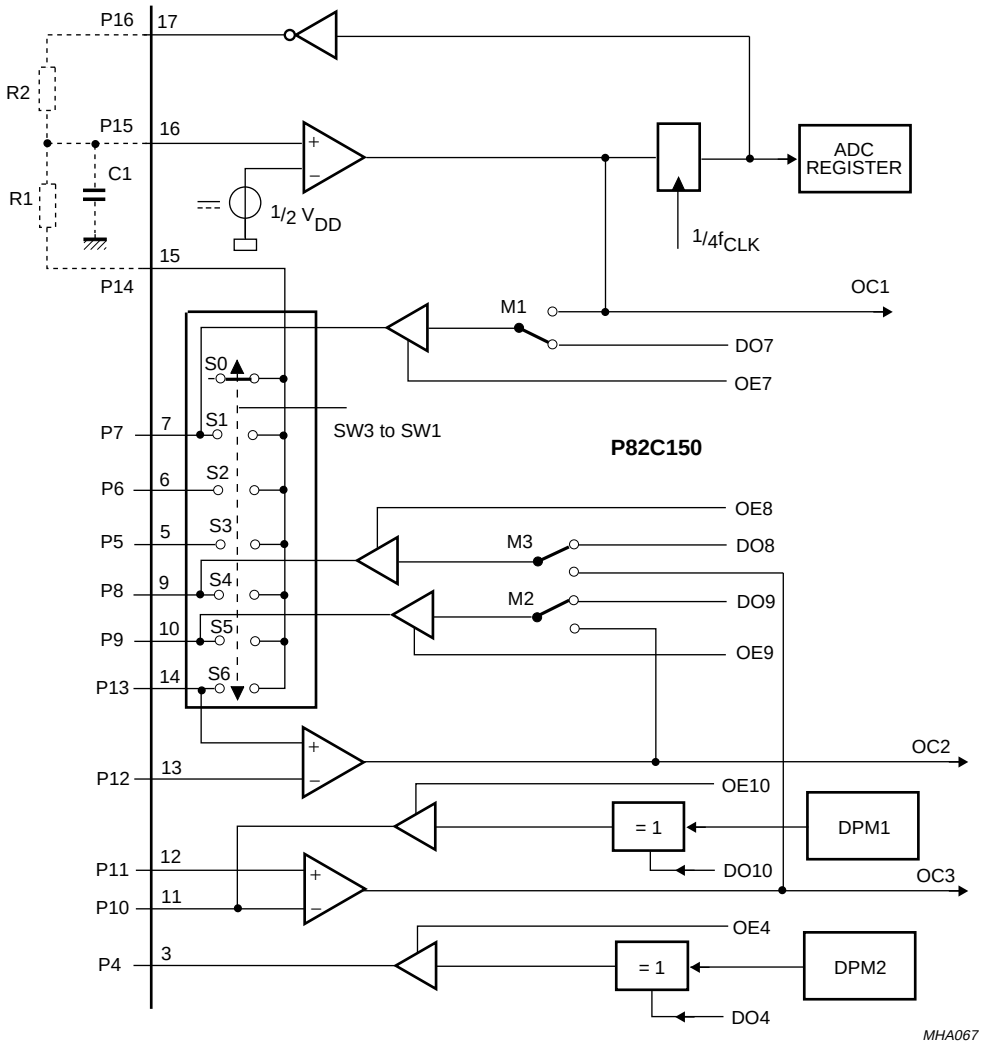

Fig.5 Analog configuration of I/O port pins; R1, R2 and C1 are used to implement the analog-to-digital converter.

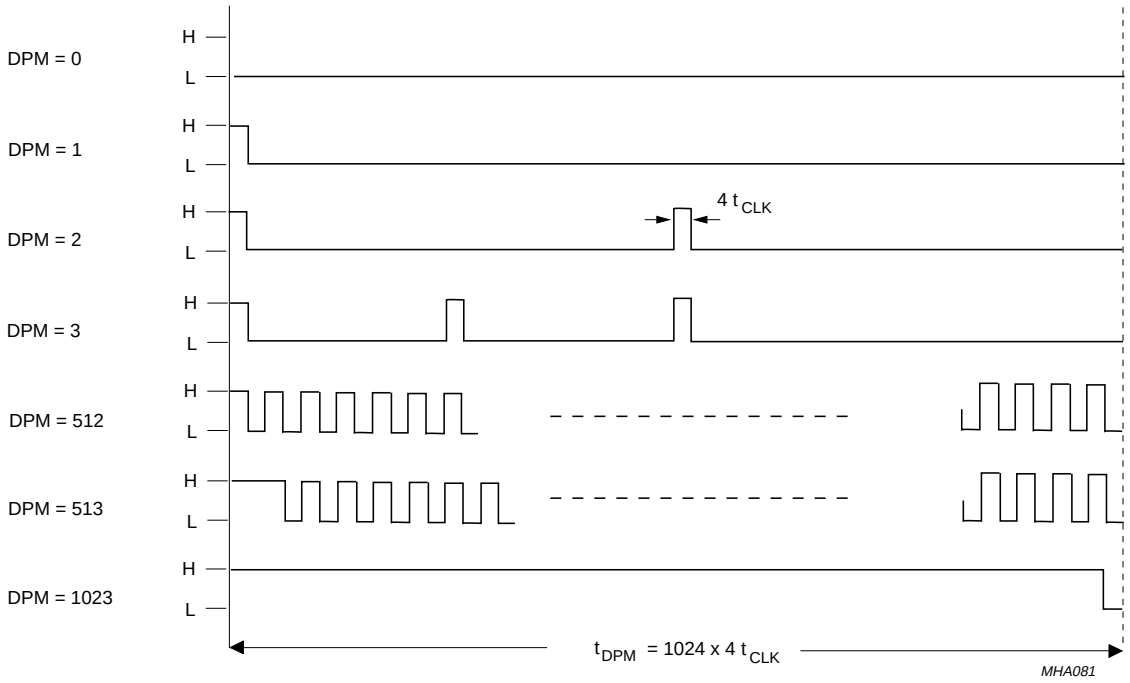

Distributed Pulse Modulation (DPM) is a special pulse count modulation.

Fig.6 DPM output pulses at DO10(4) = 0; output pulses are inverted at DO10(4) = 1.

7.3 CAN functions

The P82C150 meets the CAN protocol specification version 2.0 A and B (passive) with restricted bit timing because of the on-chip RC-oscillator and the automatic bit rate detection.

In a system with P82C150 nodes there must be at least one conventional crystal-driven CAN controller (host node) which is compatible to the CAN specification V1.2 or later to control P82C150 nodes. Host nodes compatible to CAN specification V1.1 can also be used provided that the P82C150 nodes are powered by a high-accuracy power supply or they are in external oscillator mode (refer to Section 11.3).

Each time a P82C150 node receives a Data Frame, it initiates the transmission of a Data Frame containing four bits status information, the register address (previously received) and the current contents of the addressed register (exception: see Section 7.3.3.1). This enables the host node to verify that the addressed register has correctly been written in case of writeable registers, and to read the contents in case of readable registers.

7.3.1 CAN IDENTIFIER

Data and Remote Frames to be processed by the P82C150 are of Standard Format with 11 Identifier bits ID.10 to ID.0. Frames with extended Identifier (CAN specification version 2.0 B) are ignored.

The way of identifier programming is based on two facts:

- Each P82C150 operates with only two Identifiers distinguished by the LSB (see Tables 5, 6 and 7). The identifier with the higher priority is used for Data Frame reception. An extra Identifier is used for calibration purposes.
- There can be maximum sixteen P82C150 circuits in one network.

Table 5 Message types and format

FRAME	TRANSMISSION BY 82C150	RECEPTION AT 82C150
Data Frame	yes (DLC = 3; DIR = 1)	yes (DLC = 3; DIR = 0; calibration message with DLC = 2 to 8 allowed, see Section 7.3.10)
Remote Frame	no	yes (DLC = 3; DIR = 1)
Error Frame	yes	yes
Overload Frame	yes (only as a response)	yes

Note

1. DLC = Data Length Code; DIR = LSB of Identifier (see Section 7.3.1).

Table 6 Standard Format Identifier bits ID.10 to ID.0

1 = recessive; 0 = dominant

IDENTIFIER											
ID.10	**ID.9**	**ID.8**	**ID.7**	**ID.6**	**ID.5**	**ID.4**	**ID.3**	**ID.2**	**ID.1**	**ID.0**	
0	1	P3	1	0	P2	P1	P0	1	0	DIR	RTR

Table 7 Description of the Standard Format Identifier bits

BIT	SYMBOL	DESCRIPTION
ID.8	P3	Programmable identifier bits read from Port pins P3 to P0 during reset. The input levels on P3 to P0, for example set by resistors to V_{SS} or to V_{DD}, are latched in the Identifier latch with the falling edge of the RST input signal. They represent the variable part of the Identifier, while the remaining bits are fixed (mask-programmed), P3 to P0 can be used as I/O ports after reset.
ID.5 to ID.3	P2 to P0	
ID.0	DIR	DIR = 1 for transmission of Data Frames to the host. It must be set to a logic 1 in Remote Frames and to a logic 0 in Data Frames received from the host.
	RTR	Remote Transmission Request bit.

7.3.2 Transmission of Data Frames

Data Frames transmitted by the P82C150 contain three data bytes (see Fig.7). The first data byte contains the status information and the register address A3 to A0 (see Tables 8 and 9), the other two data bytes contain the content of the addressed I/O Register.

After each successful message transmission, the P82C150 delays the transmission of a possibly further pending message for three bit times. The reason is to give other CAN controllers - with a lower identifier priority - the possibility to transmit a message in case of faulty contact at one of the edge-triggered port pins.

7.3.3 Reception of Data Frames and Remote Frames

Received Data Frames have the same format as transmitted ones, only the DIR-bit (ID.0) in the Arbitration Field is different. The status bits RSTD, EW, BM1 and BM0 are ignored during reception.

The P82C150 confirms each reception of a Data Frame by transmitting a Data Frame containing the (new) contents of the addressed I/O Register.

7.3.3.1 Exceptions to the rule

1. Analog Configuration Register: If a P82C150 receives a Data Frame addressing the Analog Configuration Register and the ADC bit is set to logic 1, it will respond with two messages. The first message returns the contents of the Analog Configuration Register. The control instructions are executed (e.g. next analog input channel selected), and an analog-to-digital conversion cycle is started after a set-up time. After finishing the analog-to-digital conversion cycle, the second message is transmitted containing the result (ADC Register).
2. ADC Register: On receiving a Data Frame addressing the ADC Register, the P82C150 starts an analog-to-digital conversion cycle. It automatically returns the result of the conversion (ADC Register) by transmitting a respective Data Frame after finishing the analog-to-digital conversion cycle.
3. At normal operation, the calibration messages are confirmed by returning a dominant bit in the acknowledge slot. There is no particular confirmation message returned by the P82C150. Only after entering the calibrated state (start-up), a Data Frame (‘sign-on’ message) containing the Data Input Register contents is transmitted indicating to the host node, that the P82C150 is now ready for transmission.

7.3.3.2 Remote Frame

Received Remote Frames must have the Data Length Code DLC = 3 (Remote Frames with DLC $\neq$ 3 are ignored). It is answered by a Data Frame containing the contents of the Data Input Register.

Table 8 Data Frame Byte 1

STATUS				REGISTER ADDRESS			
RSTD	EW	BM1	BM0	A3	A2	A1	A0

Table 9 Description of Data Frame Byte 1 bits

SYMBOL	DESCRIPTION
Status	
RSTD	It is logic 1 in the first message (‘sign-on’ message) after the successful detection of the bit rate (bit time calibrated).
EW	Logic 1, if the error warning limit (32) is reached. In the “sign-on” message EW is always logic 1. The EW status bit is set when the Receive Error Counter or the Transmit Error Counter have exceeded the Error Warning Limit of 32, also temporarily, since the last successful transmission of a message.
BM1	Bus mode status bits.
BM0	
Register address	
A3 to A0	Register address bits.

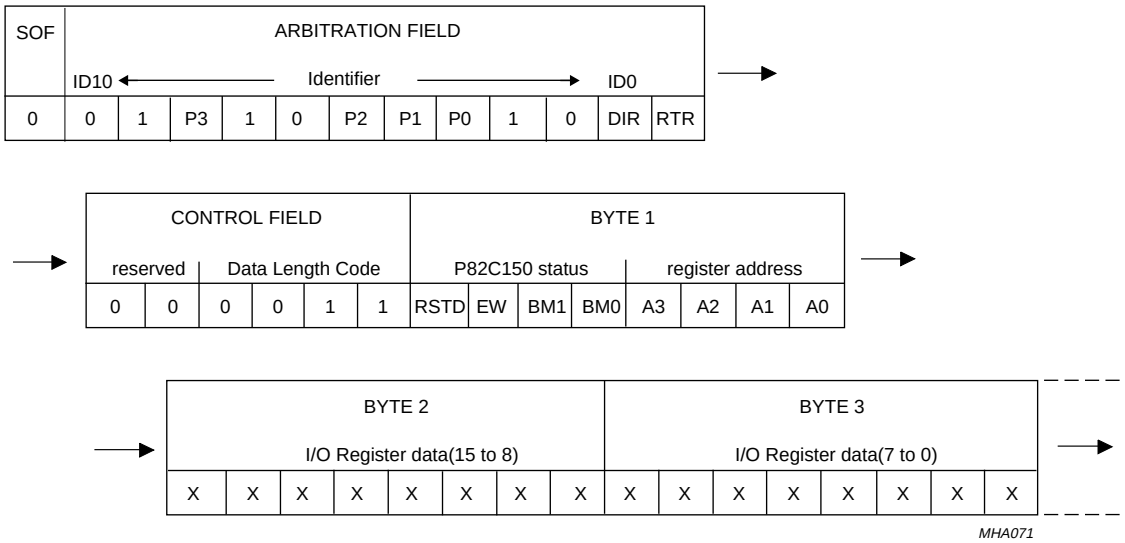

SOF: Start Of Frame.
RTR: Remote Transmission Request.
P3 to P0: equals programmed identifier bits.

Fig.7 P82C150 Data Frame.

7.3.4 CAN-BUS MODES

The P82C150 can pass through four CAN-bus modes under certain conditions (see Fig.8). In the bus modes 0 to 2 (see Table 10) the P82C150 is operating with different input comparator configurations. Bus mode 3 is the power reduced Sleep Mode.

The bus modes support:

- Communication on two balanced wires (differential system)
- Communication on one wire in a two-wire differential system
- Sleep Mode with wake-up via either a dominant signal on RX0 or RX1 input
- Connection of a second transmission medium (redundancy)

There are two possibilities for condition 1 to switch to the next mode (see Fig.8):

- Overflow of the bit counter when 8192 is reached since the last calibration message
- Overflow of the Transmit Error Counter (>255; bus-off limit reached).

When the bus mode changes, all I/O Registers are cleared and outputs become floating (OE bits cleared). That means the I/O ports return to a fail-safe state whenever the P82C150 looses connection to its host controller. This is a kind of network watchdog function. The status bits are set to the following values after a bus mode change:

- RSTD = 1
- EW = 0
- $BM_{new} = BM_{old} + 1$.

The programmed Identifier bits remain unchanged.

After reset the P82C150 changes directly into bus mode 3 (Sleep Mode). During Sleep Mode, the internal RC oscillator is stopped, and all the output drivers are disabled (I/O Register contents cleared). A P82C150 in Sleep Mode can be woken up via CAN-bus lines (dominant level on RX0 or RX1) or by a reset condition.

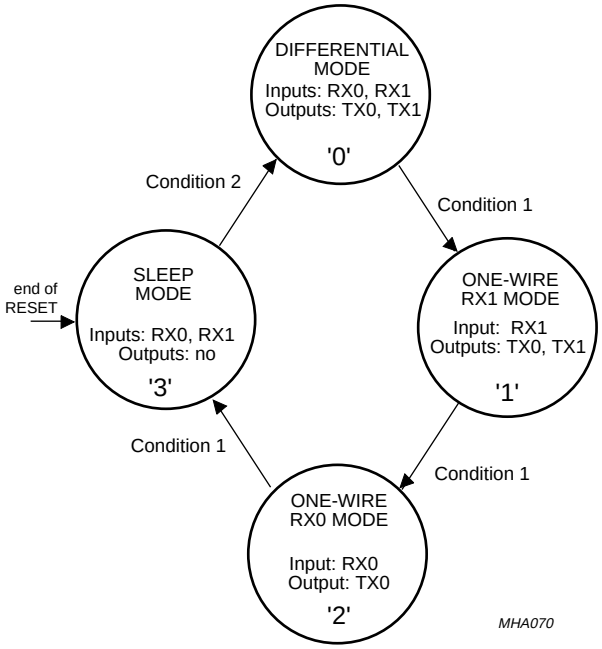

Condition 1:
bit counter overflow (>8191) or Transmit Error Counter overflow (>255).
Condition 2:
dominant bit detected on RX0 and RX1.

Fig.8 CAN-bus modes and switch-over conditions.

Table 10 Can-bus modes

BUS MODE	BITS		RECEPTION LEVEL		TRANSMISSION	
	BM1	BM0	RECESSIVE	DOMINANT	TX1	TX0
0 = Differential	0	0	RX0 > RX1	RX0 < RX1	enabled	enabled
1 = One-wire RX1	0	1	RX1 < REF	RX1 > REF	enabled	enabled
2 = One-wire RX0	1	0	RX0 > REF	RX0 < REF	disabled	enabled
3 = Sleep	1	1	RX0 > REF and RX1 < REF	RX0 < REF or RX1 > REF	disabled	disabled

Note

1. Output TX1 is disabled in bus mode 2 to tolerate short-circuit between the CAN-bus wires CAN_H and CAN_L.

7.3.5 Bit Timing

The Nominal Bit Time of the P82C150 is subdivided into 10 Time Quanta. The Synchronization Time Segment (SYNC_SEG) and the Propagation Time Segment (PROP_SEG) are each one Time Quantum long. The Phase Buffer Segment 1 (PHASE_SEG1) and the Phase Buffer Segment 2 (PHASE_SEG2) are each four Time Quanta long. The Resynchronization Jump Width (SJW) is four Time Quanta long.

The sample point is located at the end of the Phase Buffer Segment 1. The Nominal Bit Time is internally adjusted to that bit timing which is provided by the crystal driven host (calibration message).

The usable bus length at a given bit rate is reduced in comparison to other CAN controllers with programmable bit timing because the Propagation Time Segment is fixed to $^1/_{10}$ length of the Nominal Bit Time. The bit segmentation of the crystal driven host should be programmed like the fixed bit segmentation of the P82C150, e.g. one bit time segment is $^1/_{10}$ length of the Nominal Bit Time (refer also to Table 15 for bit time programming).

Table 11 Bit time subdivision

1 BIT TIME									
BT1	**BT2**	**BT3**	**BT4**	**BT5**	**BT6**	**BT7**	**BT8**	**BT9**	**BT10**
SYNC_SEG	PROP_SEG	PHASE_SEG1				PHASE_SEG2			

7.3.6 CAN-Bus Transceiver

The transceiver of the P82C150 consists of the configurable input comparator and of complementary open-drain driver outputs. The reference voltage REF is an additional output.

7.3.6.1 CAN-bus input comparator (RX0, RX1)

The input comparator monitors the transient voltage on RX1 and RX0.

The result of the input comparator is logic 1 if the voltage levels of the CAN-bus lines are regarded as recessive, and logic 0 if they are regarded as dominant.

The recessive state and the dominant state are not equivalent and may not be mixed-up.

The input comparator is configurable depending on the four CAN-bus modes (see Table 10), supporting battery-powered applications (Sleep Mode) and tolerance against bus wiring failures.

7.3.6.2 CAN-bus output drivers (TX0, TX1)

The output driver function is shown in Table 12. The output driver TX1 is disabled in bus mode 2 to tolerate a short-circuit between the CAN-bus lines in a two-wire differential CAN physical layer.

Table 12 CAN-bus driver output function

CAN OUTPUT	RECESSIVE	DOMINANT		RESET STATE, BUS-OFF AND SLEEP MODE (MODE 3)
		MODES 0 AND 1	MODE 2	
TX0	floating	LOW	LOW	floating
TX1	floating	HIGH	floating	floating

7.3.7 Transmit and receive logic

The transmit and receive logic stores the destuffed bit stream which was received or is about to be transmitted. The incoming Identifier is compared with that of the P82C150. The content of the message is transferred to the port logic in case of matching.

At transmission, the message about to be sent is put together: the Identifier, the status information, the register address and the content of the addressed register from the port logic.

7.3.8 Bit Stream Processor and Error Management Logic

The Bit Stream Processor (BSP) is a sequencer to control the data stream between the transmit/receive logic (parallel data) and the on-chip CAN transceiver (serial data). Reception/transmission, bit stuffing/destuffing, arbitration and error detection, according to CAN protocol specification version 2.0 A and B (passive), are performed. Further, automatic re-transmission of corrupted messages is handled by means of continuously comparing the output bit stream with the input bit stream. Moreover, the Bit Stream Processor provides control information to calibrate the internal bit time.

The Error Management Logic is responsible for the complete CAN-inherent error management.

7.3.9 Oscillator and calibration

The P82C150 contains an on-chip RC-oscillator. The bit time is automatically calibrated by messages being received via CAN-bus. During start-up (after wake-up or reset) any message is used to calibrate the bit time until the calibration is sufficient to receive messages correctly.

From this time on, the bit time is calibrated and fine-tuned by calibration messages with a special Identifier transmitted by the crystal-controlled host.

Only P82C150 nodes being calibrated by calibration messages can transmit messages. The first message is transmitted directly after entering the calibrated state (‘sign-on’ message). Since the P82C150 is not able to transmit as long as the bit time is not calibrated, it cannot wake-up other CAN nodes via the bus line. Hence to keep the network alive, the calibration message must be transmitted regularly by a crystal-controlled (host) node with a maximum repetition period of 8192 bit (bit length measured by the 82C150). It is recommended to select a repetition period between 3800 and maximum 8000 bit times.

7.3.10 Calibration message

The calibration message has to meet the following requirements

- Transmitted by a crystal-controlled node (host node)
- Identifier: 000 1010 1010 (1 = recessive; 0 = dominant)
- RTR bit: 0
- Allowed control field: DLC = 2 to 8
- The first recessive to dominant transition after the control field must be followed by another recessive to dominant transition in a distance of exactly 32 bit (stuff bits included).

Example of a suitable calibration message (there are others using different data bytes; see Table 13):

- Data length code: 0010
- 1st data byte: 1010 1010 (AAH)
- 2nd data byte: 0000 0100 (04H).

Table 13 Example of a suitable calibration message

The two important 1/0 transitions are marked by underlines; see note 1.

SOF	ARBITRATION FIELD	CONTROL FIELD	DATA BYTE 1	DATA BYTE 2	CRC FIELD
0	000 1010 1010 0	000**I**010	10 10 1010	0000**I** 0100	000**I**0 1011 1000 00**I**0

Note

1. **I = stuff bit** (recessive); the total length is 67 bit from start-of-frame to end-of-intermission.

7.4 Initialization

7.4.1 IDENTIFIER PROGRAMMING

Most of the P82C150 identifier bits are fixed. Four bits are programmable via port pins P3 to P0. All output drivers are disabled at reset, also P3 to P0. Thus the outputs are floating unless the input level is defined by external components to define identifier bits. They are latched at the end of reset, and P3 to P0 can be used as port pins. It is not allowed, according to the CAN protocol specification, that multiple bus nodes transmit the same identifier bit combination. Therefore a P82C150 must have one of the 16 possible identifier bit combinations, one that is not yet occupied.

7.4.2 RESET FUNCTION

RST = HIGH disables all output drivers P16 to P0, TX0 and TX1. All I/O Registers are automatically cleared and set to logic 0. The bit time is set greater than 50 μs.

If a particular clock period is necessary, e.g. for a dedicated DPM output frequency, this can be achieved by feeding an external clock signal into P0. RST and TEST must be permanently HIGH for this special mode. A reset is then performed as usual (RST = HIGH; TEST = LOW).

Table 14 Situation after RESET

STATUS BITS	IDENTIFIER BITS
RSTD = 1	ID.8 equals P3
EW = 1	ID.5 equals P2
BM1 = 0	ID.4 equals P1
BM0 = 0	ID.3 equals P0

7.4.3 BIT TIME CALIBRATION

The P82C150 must receive at least three messages to calibrate its bit time after reset or change of bus mode. The first message is used to detect the bit time length (rough calibration) between two consecutive falling edges at the output of the CAN input comparator. Therefore the bit stream should contain a sequence of ‘1010’.

After rough calibration the P82C150 can receive any valid CAN message correctly and executes respective commands without giving an acknowledge. With another valid CAN message and additionally with one valid calibration message the P82C150 is fully calibrated and sends its ‘sign-on’ message. As long as the P82C150 is fully calibrated the P82C150 acts as an active CAN node.

The P82C150 treats any CAN message (including the calibration message) as a valid message, when these messages are terminated by an error passive frame because of a missing acknowledge. This situation may occur whenever a host node works together with P82C150’s and the host node doesn’t receive an acknowledge as long as the P82C150’s are not fully calibrated.

7.4.3.1 Sign-on message

This special Data Frame is transmitted once by the P82C150 after entering the calibrated state. It indicates to the host node that the P82C150 is ready for transmission.

The sign-on message returns the contents of the Data Input Register, and can be recognized by the host mode by checking the RSTD status bit:

- Sign-on message RSTD = 1
- Other Data Frames RSTD = 0

Note that in the sign-on message the EW bit is logic 1. Nevertheless the P82C150 status with the error counters are set to logic 0.

7.5 P82C150 operation after RESET or change of bus mode

Figure 9 illustrates the calibration procedure of the P82C150 after Power-on-reset or after a bus mode change.

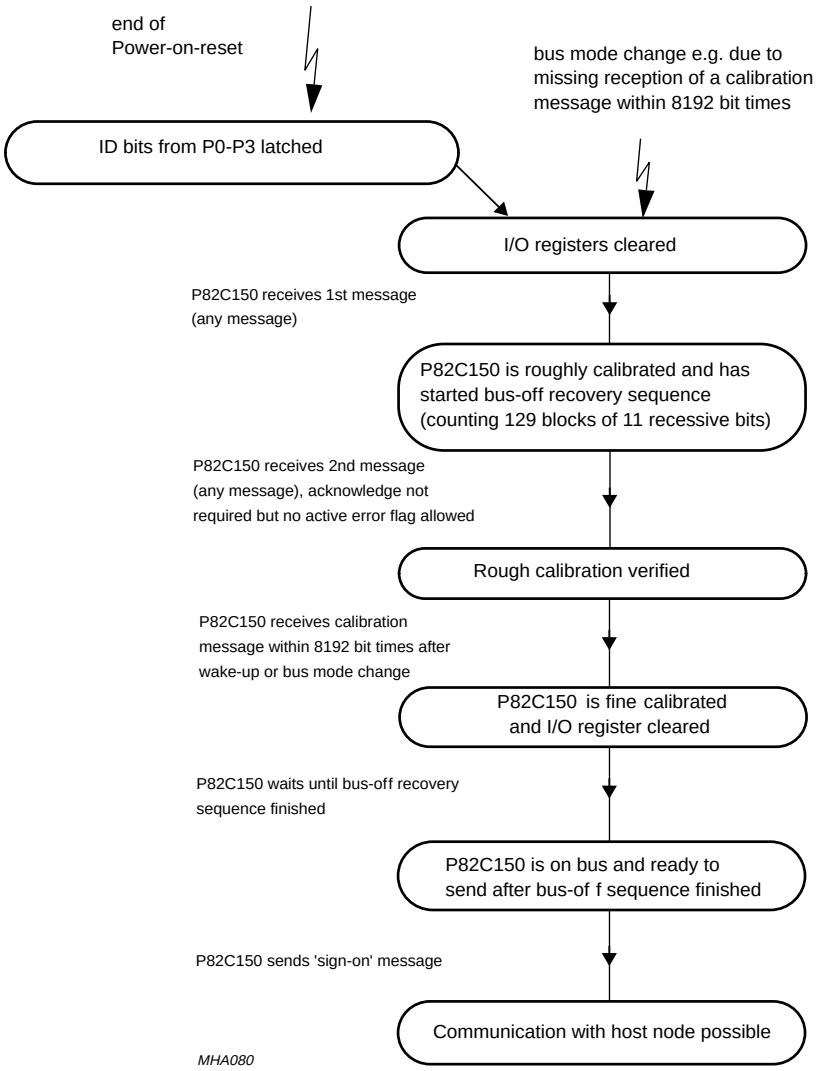

Fig.9 SLIO operation flow after reset and bus mode change.

8 LIMITING VALUES

In accordance with the Absolute Maximum Rating System (IEC 134).

SYMBOL	PARAMETER	MIN.	MAX.	UNIT
V_{DD}	supply voltage on V_{DD} pin	–0.5	+6.5	V
V_I	DC input voltage on any pin (RX0, RX1, TX0, TX1 excluded)	–0.5	V_{DD} + 0.5	V
I_I	RX1 and RX0 input current	–	±2	mA
I_{REF}	reference output current	–	±2	mA
I_O	port output current at port enabled (pins P0 to P15)	–	±5	mA
	port output current at analog switch enabled (OE-bits = 0; pins P5 to P9, P13, P14)	–	7.5	mA
	TX0 and TX1 output current	–	30	mA
P_{Otot}	total power dissipation (port outputs together)	–	200	mW
T_{amb}	operating ambient temperature range:	–40	+125	°C
T_{stg}	storage temperature range	–65	+150	°C
P_{tot}	total power dissipation	–	1	W

9 DC CHARACTERISTICS

V_{DD} = 5 V ± 4%; V_{SS} = 0 V; T_{amb} = –40 to +85 °C and T_{amb} = –40 to +125 °C; unless otherwise specified.

SYMBOL	PARAMETER	CONDITIONS	MIN.	MAX.	UNIT
Supply					
V_{DD}	supply voltage	note 1	4.8	5.2	V
I_{DD}	operating supply current	$V_{RST} = V_{DD}$; all port inputs connected via 1 MΩ to GND	–	22	mA
$I_{DD(SM)}$	supply current Sleep mode	Ports P15, P13 and P11 connected to V_{DD}; Ports P12 and P10 connected to V_{SS}; all other port inputs connected via 1 MΩ to GND		1	mA
CAN Input comparators RX0 and RX1					
V_{DIF}	differential input voltage	$0.3AV_{DD} < V_I < 0.7AV_{DD}$; note 2	±100	–	mV
V_{HYST}	input voltage hysteresis		8	60	mV
I_I	input current	$0.45\ V < V_I < V_{DD} - 0.45\ V$	–	±400	nA
CAN output driver TX0 and TX1; port pins P0 to P16 unloaded					
V_{OLT}	TX0 output voltage LOW; note 3	I_{OLT} = 1.5 mA	–	0.1	V
		I_{OLT} = 10 mA		1.0	V
V_{OHT}	TX1 output voltage HIGH; note 4	I_{OHT} = –1.5 mA	$V_{DD} - 0.1$	–	V
		I_{OHT} = –10 mA	$V_{DD} - 1.0$		V
Reference voltage REF					
V_{REF}	reference output voltage	I_O < ±75 μA	$0.5AV_{DD} - 0.25$	$0.5AV_{DD} + 0.25$	V
Control inputs RST, XMOD and digital port inputs P0/CLK, P1 to P15					
V_{IL}	input voltage LOW		–	$0.2V_{DD}$	V
V_{IH}	input voltage HIGH		$0.7V_{DD}$	–	V
V_{HYST}	input voltage hysteresis	note 2	0.5	–	V
I_{IL1}	input leakage current	$0.45\ V < V_I < V_{DD} - 0.45\ V$		±10	μA
Digital port outputs P0/CLK, P1 to P16; OE bits set					
V_{OL}	output voltage LOW	I_{OL} = 4mA (sink)	–	1.0	V
V_{OH}	output voltage HIGH	I_{OH} = –4mA (source)	$V_{DD} - 1.0$	–	V
OC2 comparator P12, P13 and OC3 comparator P10, P11					
V_{DIF1}	differential input voltage	$1.5\ V < V_I < (AV_{DD} - 1.5\ V)$; note 2	±20	–	mV

SYMBOL	PARAMETER	CONDITIONS	MIN.	MAX.	UNIT
OC1 comparator input P15					
$V_{i\ sw}$	input switch-over voltage	1.5 V < V_I < (AV_{DD} – 1.5 V); note 2			
	lower threshold		$0.5V_{DD}$ – 0.02		V
	upper threshold		–	$0.5V_{DD}$ + 0.02	V
I_{LI2}	input leakage current	0.45 V < V_I < V_{DD} – 0.45 V	–	±400	nA
C_{IA}	analog input capacitance	note 2	–	20	pF
Analog switches; ION = ±4 mA					
R_{ON}	On resistance	between P5 to P9, P13 and P14; note 2	20	200	Ω

Notes to the DC characteristics:

1. Alteration of V_{DD} between two calibration messages should not exceed 0.2 V to avoid failures during CAN message transfer. If CAN devices according to CAN specification V1.0 or V1.1 (like the 82C200 V0 or V1) are in the same network with the 82C150, then this alteration of V_{DD} should be limited to 0.1V for the 82C150.
2. These values are characterized but not 100% production tested.
3. The TX0 output pin is an open drain pull-down driver (no pull-up driver included).
4. The TX1 output pin is an open drain pull-up driver (no pull-down driver included).

10 AC CHARACTERISTICS

V_{DD} = 5 V ± 4%; V_{SS} = 0 V; C_L = 100 pF (output pins); T_{amb} = –40 to +85 °C and T_{amb} = –40 to +125 °C; unless otherwise specified.

SYMBOL	PARAMETER	CONDITIONS	MIN.	MAX.	UNIT
f_{CLK_INT}	system clock frequency on-chip	internal oscillator	4	10	MHz
t_{bit}	bit time on CAN-bus	note 1	8	50	µs
t_{RST1}	min. RST pulse width after power on	note 2	150	–	ms
t_{RST2}	min. RST pulse width during operation	note 2	1	–	µs
t_{hold}	ID hold time after end of reset	note 2	100	–	ns
t_d	total signal delay of CAN input comparator and CAN output driver	$0.3AV_{DD}$ < V_I < $0.7AV_{DD}$; note 2	–	100	ns
t_{rep}	max. time without recalibration message		–	8000	bit
Analog-to-digital comparator input P15					
t_{cyc}	analog-to-digital conversion cycle time		0.4	1.1	ms
t_{init}	initialization time of analog-to-digital conversion		0.4	2.1	ms
OC2 comparator P12, P13 and OC3 comparator P10, P11					
t_{resp}	response time	V_{DIF1} = ±100 mV; note 2		1	µs
DPM1 and DPM2 outputs					
t_{DPM}	repetition time of DPM cycle		0.4	1.1	ms

Notes

1. Other bit time values are possible with the external oscillator mode (refer to Chapter 11.3).
2. These values are characterized but not 100% production tested.

11 APPLICATION INFORMATION

11.1 Maximum bus length

The bit timing parameters refer to using a P8xCE598 or P8xC592 microcontroller with on-chip CAN interface as a host node (see Fig.20).

11.1.1 ASSUMPTIONS

- The total in/out delay of external transceiver circuit is less than 180 ns (e.g. PCA82C250 CAN transceiver; see Fig.20).
- The propagation delay on the transmission medium is 5.0 ns/m.

Table 15 Maximum bus length for CAN-bus systems with P82C150 nodes.

BIT RATE (kbit/s)	t_{prop}(1) (µs)	INDICATION FOR MAXIMUM BUS LENGTH (m)	BIT TIMING (P8xCE598/P8xC592)		
			f_{CLK} (MHz)	BTR0(2)	BTR1(2)
125	0.8	25	15	C5H	34H
100	1	45	16	C7H	34H
50	2	145	16	CFH	34H
20	5	445	16	E7H	34H

Notes

1. t_{prop} is the maximum propagation delay between two CAN-bus nodes (delays of on- and off-chip transceiver circuits included).
2. BTR0 and BTR1 (hex values) are particular configuration registers referring to bit timing.

11.2 Start up sequence

The following start-up sequence, illustrated by Figures 10 and 11, shows a simple example how P82C150 nodes can be controlled from a host node. This application example works with different system configurations:

- One conventional crystal-controlled CAN node and one or more P82C150 nodes.
- More than one conventional crystal-controlled CAN node and one or more P82C150 nodes.

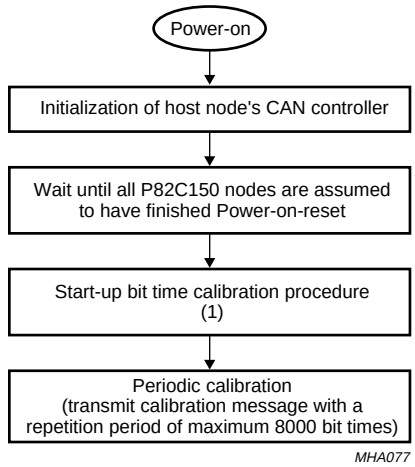

(1) See Fig.11.

Fig.10 General start-up procedure for CAN-bus systems with P82C150 nodes.

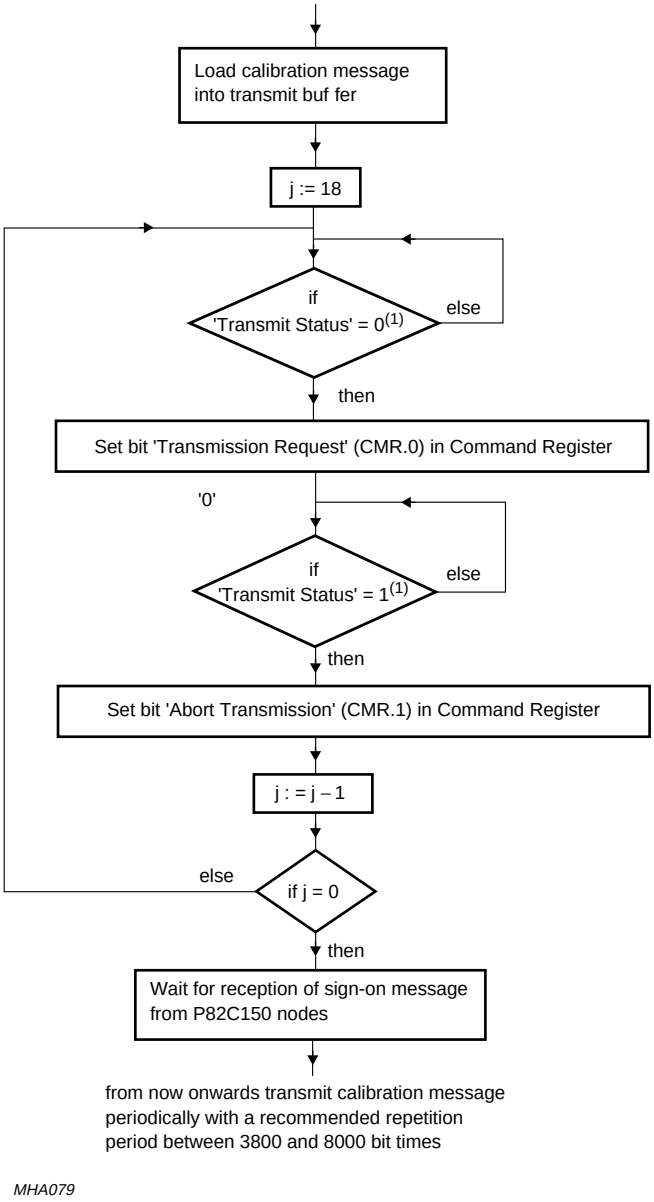

(1) Bit SR.5 in Status Register.

Fig.11 P82C150 start-up bit time calibration procedure for host node **(P8xC592, P8xCE598 or P82C200)**.

11.3 External oscillator mode

In this mode the P82C150 operates with an external clock instead with the on-chip RC-oscillator. Figure 14 shows the application with an external clock.

In this mode the P82C150 can achieve bit rates below 20 kbit/s and above 125 kbit/s. The DPM pulse width is $4 \times t_{CLK}$ of the external clock. The corresponding CAN identifier bit at Port P0 is set to a logic 0. Therefore only eight P82C150 based CAN nodes operate within the same network in external oscillator mode.

11.3.1 NOTE

The external oscillator mode is not the normal operation mode.

11.4 Using digital I/O port functions

Figures 12 and 13, show the principle application for digital input and output.

11.5 Using DPM

The simplest way to generate an analog voltage using the P82C150 is to apply an external low pass filter at one of the DPM (Distributed Pulse Modulation) outputs. The simplest implementation concept is a RC-filter of the first order (refer to Fig.15). Regarding the selection of the time constant (edge frequency) of this filter, a trade-off between minimizing of the ripple voltage for maximum accuracy and minimum of the settling time has to be considered.

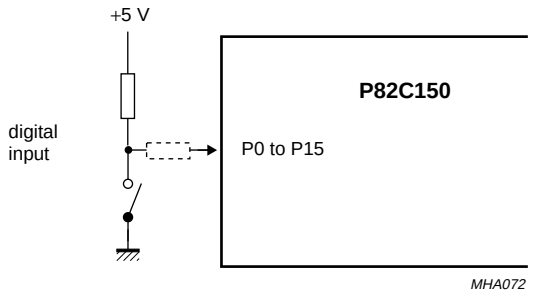

Fig.12 Example for digital input application.

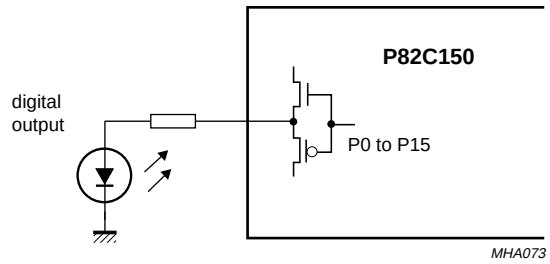

Fig.13 Example for digital output application.

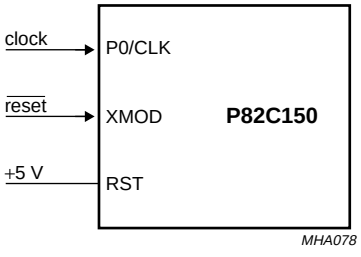

Fig.14 P82C150 in external oscillator mode.

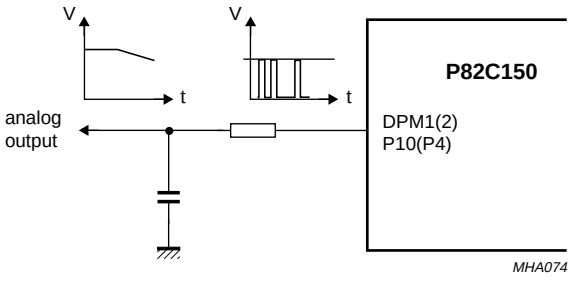

If the output is loaded by a resistive load, this will decrease the accuracy due to the voltage drop across the series resistor. In these cases a low value for the series resistor should be chosen.

The repetition time of one DPM cycle can be derived from:

$$t_{CYC} = \frac{4096}{f_{OSC}}$$

Fig.15 Example for DPM application.

11.6 Using ADC

The application in Fig.16 can be used for analog-to-digital conversion for only one analog input signal. The evaluation of ADC were done with the values R1 = R2 = 100 kΩ and C = 3.3 nF; under these conditions the ADC may reach an accuracy of 7 to 8 bit (depends on application). The external components should be connected close to the port pins P15 and P16 with short wiring to avoid disturbances at the analog input port pin P15.

Using the on-chip multiplex function the P82C150 provides up to six input port pins to convert analog input signals to digital values (see Fig.17).

The period for one ADC cycle is identical to the length of one DPM cycle.

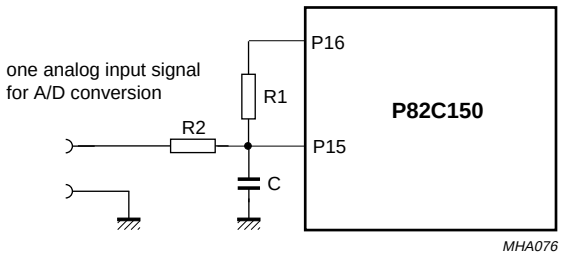

Fig.16 ADC implementation.

11.7 Using analog input port functions

Figure 18 shows the wide range of analog input applications:

- Comparison of two analog input signals.
- Comparison of one analog input signal against a fixed threshold.
- Window comparator including monitoring the comparator outputs at the port pins P8 and P9; additional automatically generated messages, when the corresponding port bits in the Negative Edge and/or Positive Edge register are set.
- Local control two-step system.

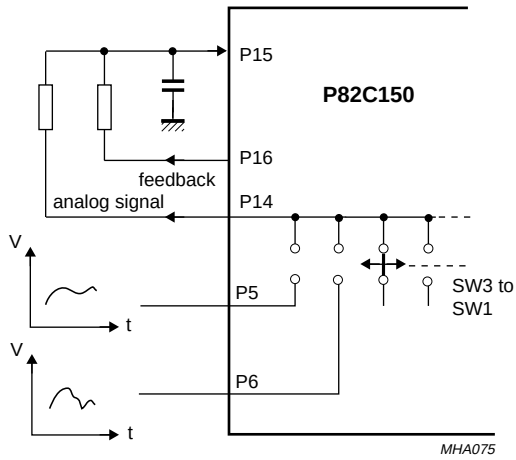

Fig.17 Two multiplexed analog input signals switched for analog-to-digital conversion (maximum 6 signals; see Fig.5).

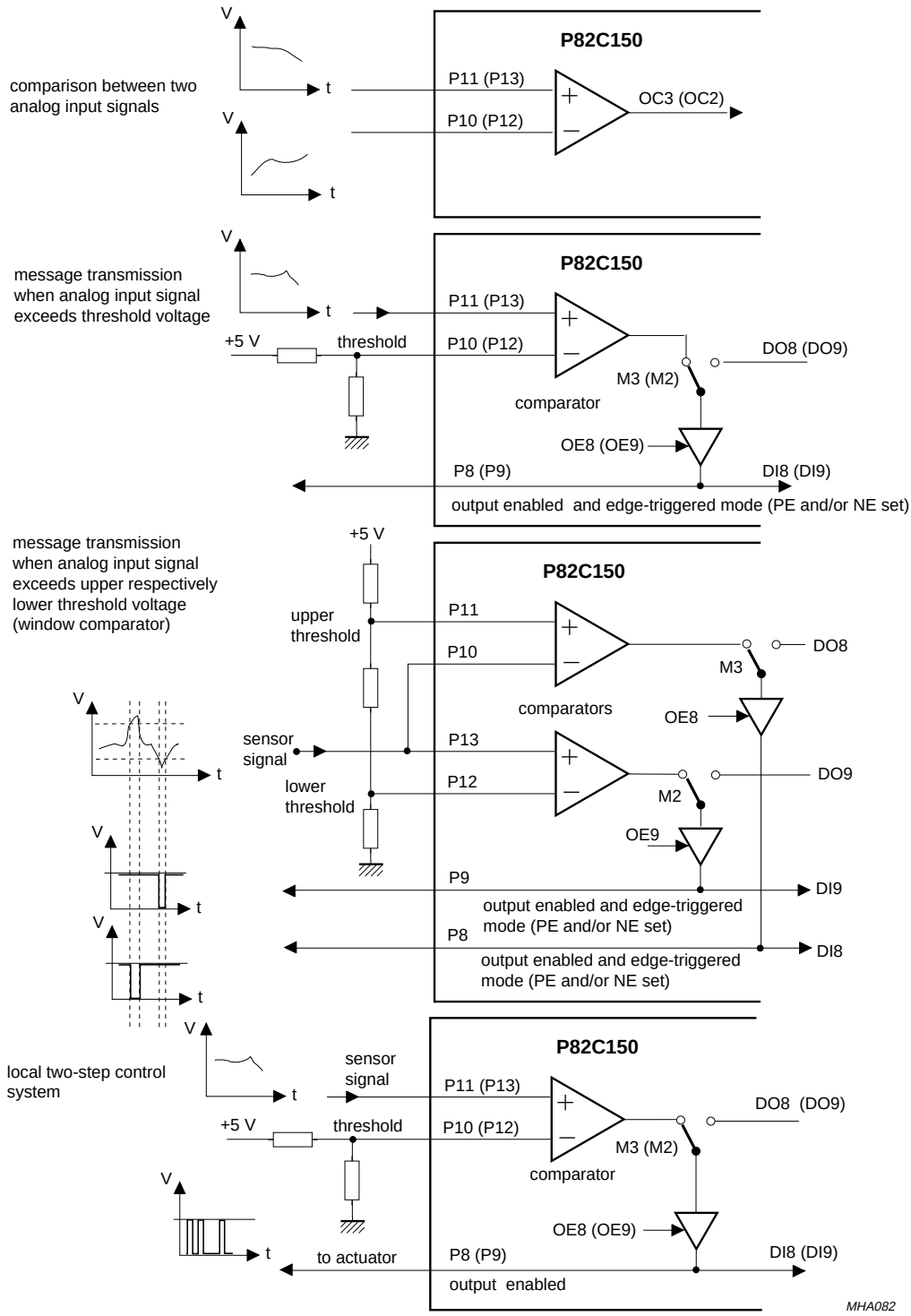

Fig.18 Examples of comparator applications.

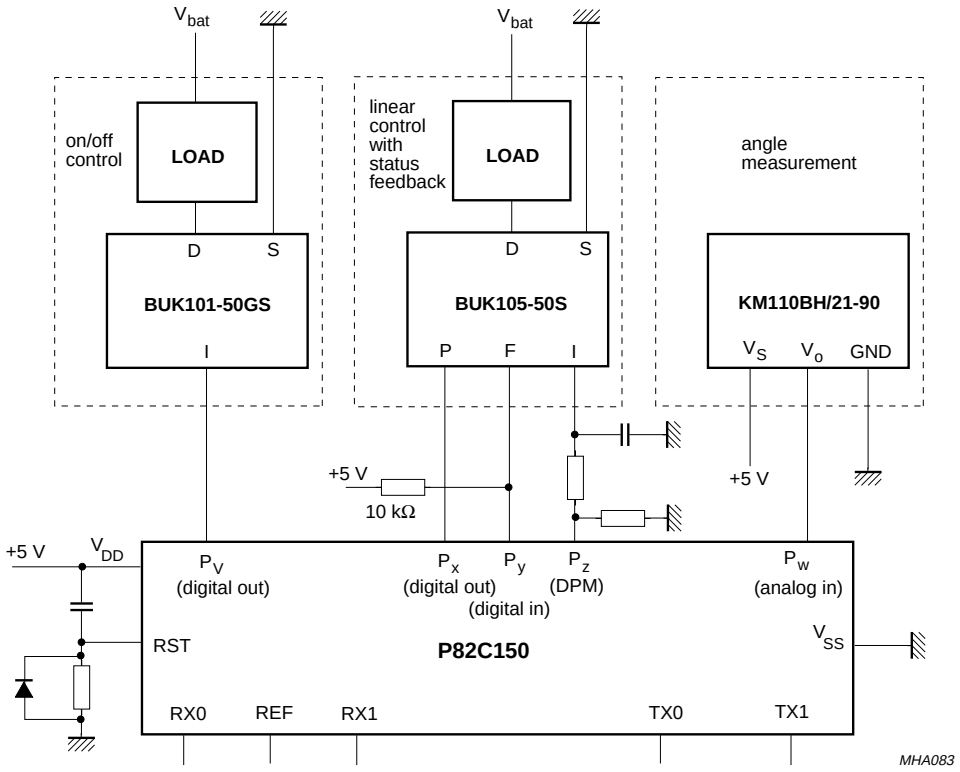

Fig.19 Examples of TOPFET applications with P82C150.

11.8 CAN-bus system applications

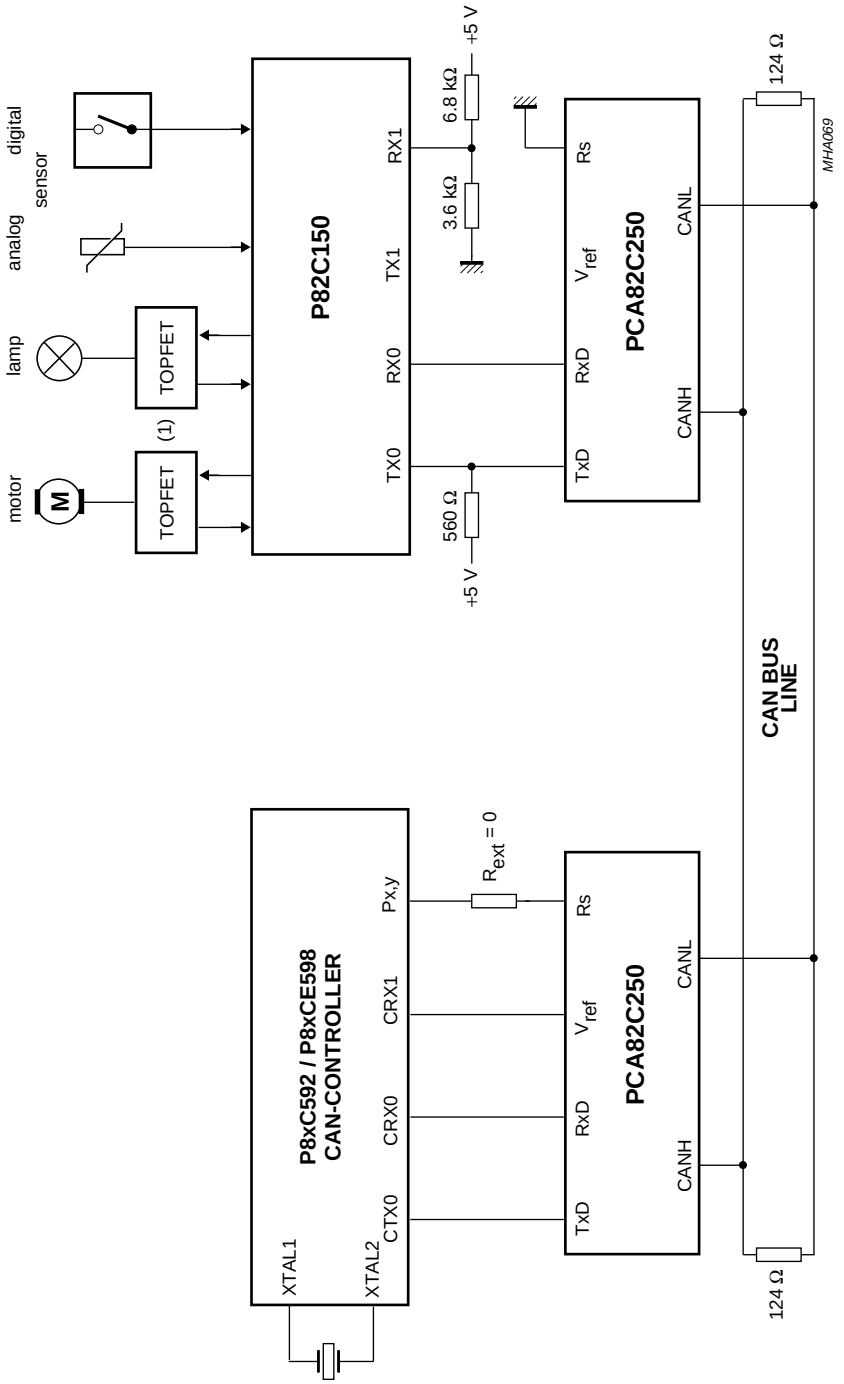

(1) TOPFET = temperature and Overload-Protected Field-Effect-Transistor

Fig.20 P82C150 system application using CAN transceiver PCA82C250 (ISO/DIS 11898 standard).

12 PACKAGE OUTLINE

SO28: plastic small outline package; 28 leads; body width 7.5 mm **SOT136-1**

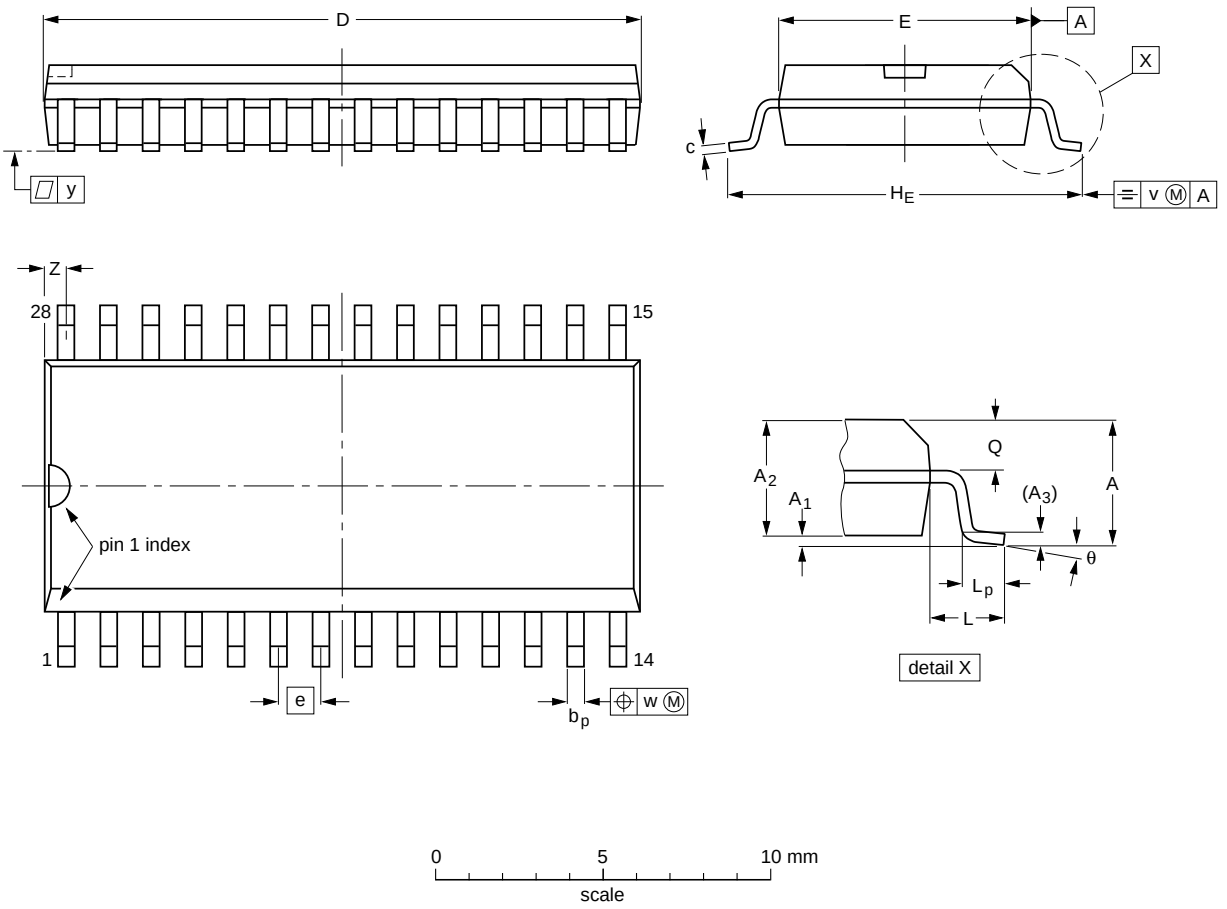

DIMENSIONS (inch dimensions are derived from the original mm dimensions)

UNIT	A max.	A_1	A_2	A_3	b_p	c	$D^{(1)}$	$E^{(1)}$	e	H_E	L	L_p	Q	v	w	y	$Z^{(1)}$	θ
mm	2.65	0.30 0.10	2.45 2.25	0.25	0.49 0.36	0.32 0.23	18.1 17.7	7.6 7.4	1.27	10.65 10.00	1.4	1.1 0.4	1.1 1.0	0.25	0.25	0.1	0.9 0.4	8° 0°
inches	0.10	0.012 0.004	0.096 0.089	0.01	0.019 0.014	0.013 0.009	0.71 0.69	0.30 0.29	0.050	0.42 0.39	0.055	0.043 0.016	0.043 0.039	0.01	0.01	0.004	0.035 0.016	

Note

1. Plastic or metal protrusions of 0.15 mm maximum per side are not included.

OUTLINE VERSION	REFERENCES				EUROPEAN PROJECTION	ISSUE DATE
	IEC	JEDEC	EIAJ			
SOT136-1	075E06	MS-013AE				~~91-08-13~~ 95-01-24

13 SOLDERING

13.1 Introduction

There is no soldering method that is ideal for all IC packages. Wave soldering is often preferred when through-hole and surface mounted components are mixed on one printed-circuit board. However, wave soldering is not always suitable for surface mounted ICs, or for printed-circuits with high population densities. In these cases reflow soldering is often used.

This text gives a very brief insight to a complex technology. A more in-depth account of soldering ICs can be found in our *"IC Package Databook*" (order code 9398 652 90011).

13.2 Reflow soldering

Reflow soldering techniques are suitable for all SO packages.

Reflow soldering requires solder paste (a suspension of fine solder particles, flux and binding agent) to be applied to the printed-circuit board by screen printing, stencilling or pressure-syringe dispensing before package placement.

Several techniques exist for reflowing; for example, thermal conduction by heated belt. Dwell times vary between 50 and 300 seconds depending on heating method. Typical reflow temperatures range from 215 to 250 °C.

Preheating is necessary to dry the paste and evaporate the binding agent. Preheating duration: 45 minutes at 45 °C.

13.3 Wave soldering

Wave soldering techniques can be used for all SO packages if the following conditions are observed:

- A double-wave (a turbulent wave with high upward pressure followed by a smooth laminar wave) soldering technique should be used.
- The longitudinal axis of the package footprint must be parallel to the solder flow.
- The package footprint must incorporate solder thieves at the downstream end.

During placement and before soldering, the package must be fixed with a droplet of adhesive. The adhesive can be applied by screen printing, pin transfer or syringe dispensing. The package can be soldered after the adhesive is cured.

Maximum permissible solder temperature is 260 °C, and maximum duration of package immersion in solder is 10 seconds, if cooled to less than 150 °C within 6 seconds. Typical dwell time is 4 seconds at 250 °C.

A mildly-activated flux will eliminate the need for removal of corrosive residues in most applications.

13.4 Repairing soldered joints

Fix the component by first soldering two diagonally-opposite end leads. Use only a low voltage soldering iron (less than 24 V) applied to the flat part of the lead. Contact time must be limited to 10 seconds at up to 300 °C. When using a dedicated tool, all other leads can be soldered in one operation within 2 to 5 seconds at between 270 and 320 °C

14 DEFINITIONS

Data sheet status	
Objective specification	This data sheet contains target or goal specifications for product development.
Preliminary specification	This data sheet contains preliminary data; supplementary data may be published later.
Product specification	This data sheet contains final product specifications.
Limiting values	
Limiting values given are in accordance with the Absolute Maximum Rating System (IEC 134). Stress above one or more of the limiting values may cause permanent damage to the device. These are stress ratings only and operation of the device at these or at any other conditions above those given in the Characteristics sections of the specification is not implied. Exposure to limiting values for extended periods may affect device reliability.	
Application information	
Where application information is given, it is advisory and does not form part of the specification.	

15 LIFE SUPPORT APPLICATIONS

These products are not designed for use in life support appliances, devices, or systems where malfunction of these products can reasonably be expected to result in personal injury. Philips customers using or selling these products for use in such applications do so at their own risk and agree to fully indemnify Philips for any damages resulting from such improper use or sale.

NOTES

Philips Semiconductors – a worldwide company

Argentina: see South America

Australia: 34 Waterloo Road, NORTH RYDE, NSW 2113,
Tel. +61 2 805 4455, Fax. +61 2 805 4466

Austria: Computerstr. 6, A-1101 WIEN, P.O. Box 213,
Tel. +43 1 60 101, Fax. +43 1 60 101 1210

Belarus: Hotel Minsk Business Center, Bld. 3, r. 1211, Volodarski Str. 6,
220050 MINSK, Tel. +375 172 200 733, Fax. +375 172 200 773

Belgium: see The Netherlands

Brazil: see South America

Bulgaria: Philips Bulgaria Ltd., Energoproject, 15th floor,
51 James Bourchier Blvd., 1407 SOFIA,
Tel. +359 2 689 211, Fax. +359 2 689 102

Canada: PHILIPS SEMICONDUCTORS/COMPONENTS,
Tel. +1 800 234 7381, Fax. +1 708 296 8556

China/Hong Kong: 501 Hong Kong Industrial Technology Centre,
72 Tat Chee Avenue, Kowloon Tong, HONG KONG,
Tel. +852 2319 7888, Fax. +852 2319 7700

Colombia: see South America

Czech Republic: see Austria

Denmark: Prags Boulevard 80, PB 1919, DK-2300 COPENHAGEN S,
Tel. +45 32 88 2636, Fax. +45 31 57 1949

Finland: Sinikalliontie 3, FIN-02630 ESPOO,
Tel. +358 615 800, Fax. +358 615 80920

France: 4 Rue du Port-aux-Vins, BP317, 92156 SURESNES Cedex,
Tel. +33 1 40 99 6161, Fax. +33 1 40 99 6427

Germany: Hammerbrookstraße 69, D-20097 HAMBURG,
Tel. +49 40 23 52 60, Fax. +49 40 23 536 300

Greece: No. 15, 25th March Street, GR 17778 TAVROS,
Tel. +30 1 4894 339/911, Fax. +30 1 4814 240

Hungary: see Austria

India: Philips INDIA Ltd, Shivsagar Estate, A Block, Dr. Annie Besant Rd.
Worli, MUMBAI 400 018, Tel. +91 22 4938 541, Fax. +91 22 4938 722

Indonesia: see Singapore

Ireland: Newstead, Clonskeagh, DUBLIN 14,
Tel. +353 1 7640 000, Fax. +353 1 7640 200

Israel: RAPAC Electronics, 7 Kehilat Saloniki St, TEL AVIV 61180,
Tel. +972 3 645 0444, Fax. +972 3 648 1007

Italy: PHILIPS SEMICONDUCTORS, Piazza IV Novembre 3,
20124 MILANO, Tel. +39 2 6752 2531, Fax. +39 2 6752 2557

Japan: Philips Bldg 13-37, Kohnan 2-chome, Minato-ku, TOKYO 108,
Tel. +81 3 3740 5130, Fax. +81 3 3740 5077

Korea: Philips House, 260-199 Itaewon-dong, Yongsan-ku, SEOUL,
Tel. +82 2 709 1412, Fax. +82 2 709 1415

Malaysia: No. 76 Jalan Universiti, 46200 PETALING JAYA, SELANGOR,
Tel. +60 3 750 5214, Fax. +60 3 757 4880

Mexico: 5900 Gateway East, Suite 200, EL PASO, TEXAS 79905,
Tel. +1 800 234 7381, Fax. +1 708 296 8556

Middle East: see Italy

Netherlands: Postbus 90050, 5600 PB EINDHOVEN, Bldg. VB,
Tel. +31 40 27 83749, Fax. +31 40 27 88399

New Zealand: 2 Wagener Place, C.P.O. Box 1041, AUCKLAND,
Tel. +64 9 849 4160, Fax. +64 9 849 7811

Norway: Box 1, Manglerud 0612, OSLO,
Tel. +47 22 74 8000, Fax. +47 22 74 8341

Philippines: Philips Semiconductors Philippines Inc.,
106 Valero St. Salcedo Village, P.O. Box 2108 MCC, MAKATI,
Metro MANILA, Tel. +63 2 816 6380, Fax. +63 2 817 3474

Poland: Ul. Lukiska 10, PL 04-123 WARSZAWA,
Tel. +48 22 612 2831, Fax. +48 22 612 2327

Portugal: see Spain

Romania: see Italy

Russia: Philips Russia, Ul. Usatcheva 35A, 119048 MOSCOW,
Tel. +7 095 926 5361, Fax. +7 095 564 8323

Singapore: Lorong 1, Toa Payoh, SINGAPORE 1231,
Tel. +65 350 2538, Fax. +65 251 6500

Slovakia: see Austria

Slovenia: see Italy

South Africa: S.A. PHILIPS Pty Ltd., 195-215 Main Road Martindale,
2092 JOHANNESBURG, P.O. Box 7430 Johannesburg 2000,
Tel. +27 11 470 5911, Fax. +27 11 470 5494

South America: Rua do Rocio 220 - 5th floor, Suite 51,
CEP: 04552-903-SÃO PAULO-SP, Brazil, P.O. Box 7383 (01064-970),
Tel. +55 11 821 2333, Fax. +55 11 829 1849

Spain: Balmes 22, 08007 BARCELONA,
Tel. +34 3 301 6312, Fax. +34 3 301 4107

Sweden: Kottbygatan 7, Akalla, S-16485 STOCKHOLM,
Tel. +46 8 632 2000, Fax. +46 8 632 2745

Switzerland: Allmendstrasse 140, CH-8027 ZÜRICH,
Tel. +41 1 488 2686, Fax. +41 1 481 7730

Taiwan: PHILIPS TAIWAN Ltd., 23-30F, 66,
Chung Hsiao West Road, Sec. 1, P.O. Box 22978,
TAIPEI 100, Tel. +886 2 382 4443, Fax. +886 2 382 4444

Thailand: PHILIPS ELECTRONICS (THAILAND) Ltd.,
209/2 Sanpavuth-Bangna Road Prakanong, BANGKOK 10260,
Tel. +66 2 745 4090, Fax. +66 2 398 0793

Turkey: Talatpasa Cad. No. 5, 80640 GÜLTEPE/ISTANBUL,
Tel. +90 212 279 2770, Fax. +90 212 282 6707

Ukraine: PHILIPS UKRAINE, 2A Akademika Koroleva str., Office 165,
252148 KIEV, Tel. +380 44 476 0297/1642, Fax. +380 44 476 6991

United Kingdom: Philips Semiconductors Ltd., 276 Bath Road, Hayes,
MIDDLESEX UB3 5BX, Tel. +44 181 730 5000, Fax. +44 181 754 8421

United States: 811 East Arques Avenue, SUNNYVALE, CA 94088-3409,
Tel. +1 800 234 7381, Fax. +1 708 296 8556

Uruguay: see South America

Vietnam: see Singapore

Yugoslavia: PHILIPS, Trg N. Pasica 5/v, 11000 BEOGRAD,
Tel. +381 11 825 344, Fax.+381 11 635 777

For all other countries apply to: Philips Semiconductors, Marketing & Sales Communications,
Building BE-p, P.O. Box 218, 5600 MD EINDHOVEN, The Netherlands, Fax. +31 40 27 24825

Internet: http://www.semiconductors.philips.com/ps/

© Philips Electronics N.V. 1996 SCA49

All rights are reserved. Reproduction in whole or in part is prohibited without the prior written consent of the copyright owner.

The information presented in this document does not form part of any quotation or contract, is believed to be accurate and reliable and may be changed without notice. No liability will be accepted by the publisher for any consequence of its use. Publication thereof does not convey nor imply any license under patent- or other industrial or intellectual property rights.

Printed in The Netherlands 617021/1200/02/pp36 Date of release: 1996 Jun 19 Document order number: 9397 750 00918

Let's make things better.

Philips Semiconductors

PHILIPS