HIGH POWER INDUCTOR

P7611 Family

Features

* Lead-free (Pb-free)
* RoHS compliant
* High Current (>50A)
* Low DCR (to 0.6mΩ)
* Foil windings
* Closed magnetic circuit

Applications

* DC-DC Converters
* Voltage Regulator Modules
* Distributed Power
* MPU power supplies
* Servers
* Workstations
* Telecom equipment

DESCRIPTION

The P7611 family comprises high-energy-density surface mount inductors. The family employs copper foil windings, giving excellent DC resistance, thermal efficiency and high frequency performance to 1MHz. The core is a closed magnetic circuit to afford magnetic shielding.

The P7611 family is compliant with RoHS Directive 2002/95/EC and supplied in tape and reel packaging, and is suitable for Pb-free and conventional placement and reflow.

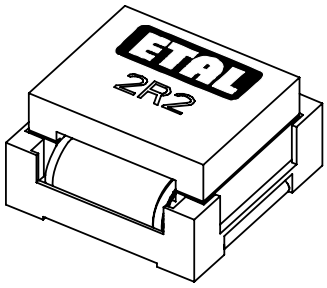

RoHS COMPLIANT

SPECIFICATIONS

Electrical

Part Number	Nominal Inductance (µH)	Inductance (µH) (1)	DCR (mΩ) Max	Rated Current I_{RMS} (A)(2)	Isat(2)
P7611-R47MT	0.47	0.52±20%	0.6	53	64
P7611-R68MT	0.68	0.63±20%	0.6	53	50
P7611-1R0MT	1.0	1.15±20%	1.3	33	42
P7611-2R2MT	2.2	2.0±20%	2.3	24	32
P7611-4R7MT	4.7	4.55±20%	4.6	17	21
P7611-5R6MT	5.6	5.6±20%	4.6	17	17

Notes

1. Inductance measured at 300kHz, 250mV.
2. Rated current, $I_{RMS,}$ is the current at which the temperature rise is 40ºC typical.
3. Saturation Current, I_{sat}, is the DC current at which the zero-current inductance drops by 30% (typ).
4. Operating temperature -40ºC to +85ºC.
5. For non-standard inductance values, please contact Profec.

CONSTRUCTION

Dimensions

Fig. 1

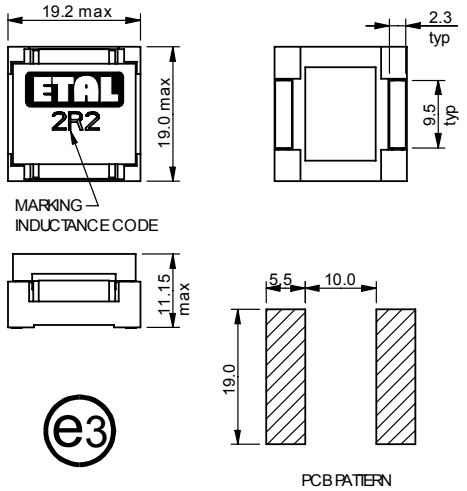

Connections

Fig. 2

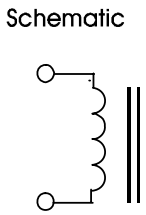

Dimensions shown are in millimetres

Terminal plating JESD97 category = e3.

Recommended reflow solder profile:
2 minutes @ 150-200ºC,
10 seconds @ 260ºC;
time above 217ºC 60 seconds maximum.

ORDERING CODE

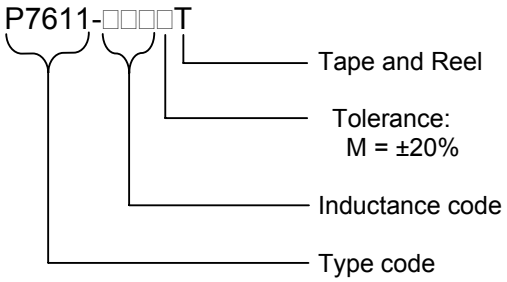

ABSOLUTE MAXIMUM RATINGS

Storage temperature	-40ºC to +105ºC
Operating temperature	-40ºC to +85ºC
Soldering temperature profile peak	260ºC 10s

Handle in accordance with IPC/JEDEC J-STD-033 procedure for components classified as IPC/JEDEC J-STD-020 Moisture Sensitivity Level 2.

ETAL Group Oy, Kuormatie 14, FIN-03101, Nummela
Telephone: +358 (0)20 7500 330 Fax: +358 (0)20 7500 333
Website: www.etalgroup.com Email: etalgroup@egruppen.com

ISO 9001
FM 25326