P61089B High Voltage Ringing SLIC Protector

General Description

This device has been especially designed to protect 2 new high voltage, as well as classical SLICs, against transient overvoltages.

Positive overvoltages are clamped by 2 diodes. Negative surges are suppressed by 2 thyristors, their breakdown voltage being referenced to $-V_{BAT}$ through the gate.

This component presents a very low gate triggering current (I_{GT}) in order to reduce the current consumption on printed circuit board during the firing phase.

This devices are not subject to ageing and provide a fail safe mode in short circuit for a better protection. They are used to help equipment to meet various standards such as UL1950, IEC950/CSA C22.2, UL1459 and FCC part68.

Features

- Dual line programmable transient voltage suppressor
- Wide negative firing voltage range: V_{MGL} =-155V
- Holding current: I_H >150mA
- Marking: P61089B
- Low dynamic switching voltages: V_{FP} and V_{DGL}
- Low gate triggering current: I_{GT} =5mA max
- Halogen Free

Applications

- Switch Line Card
- Access Network Line Card
- PBX
- VoIP

Package	Device Symbol
 SOP-8	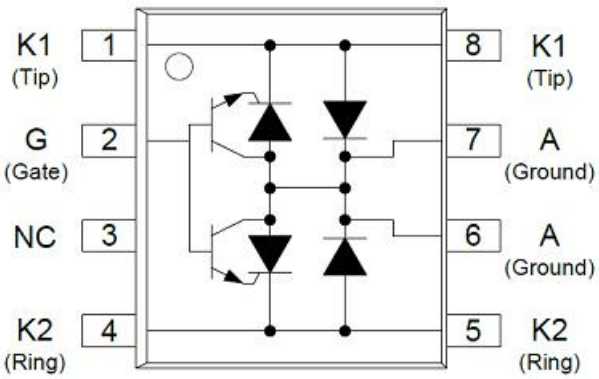

Absolute Maximum Ratings(T_A=25℃)

Parameter	Symbol	Value	Unit
Repetitive peak off-state voltage, V_{GK}=0	V_{DRM}	-170	V
Repetitive peak gate-cathode voltage, V_{KA}=0	V_{GKRM}	-170	V
Non-repetitive peak on-state current 10/1000μs (Telcordia (Bellcore) GR-1089-CORE.Issue 2.February 1999, Section4) 5/320μs (ITU-T K.20, K.21 & K.45, K.44 open-circuit voltage wave shape 10/700μs) 1.2/50μs (Telcordia (Bellcore) GR-1089-CORE.Issue 2.February 1999, Section4) 2/10μs (Telcordia (Bellcore) GR-1089-CORE.Issue 2.February 1999, Section4)	I_{PPSM}	 30 40 100 120	A
Non-repetitive peak on-state current. VGG=-75V 50Hz to 60Hz 0.1s 1s 5s 300s 900s	I_{TSM}	 11 4.8 2.7 0.95 0.93	A
Operating free-air temperature range	T_A	-40 to +85	℃
Operating junction temperature range	T_J	-40 to +125	℃
Storage temperature range	T_{STG}	-40 to +150	℃
Lead soldering temperature, 10 seconds	T_{LS}	300(Mix.)	℃

Thermal Characteristics

Parameter	Test Conditions	Max	Unit
$R_{\theta JA}$ Junction to free air thermal temperature	T_A=25℃, EIA/JESD51-3 PCB, EIA/JESD51-2 environment, P_{TOT}=1.7W	120	℃/W

Parameter Measurement Information

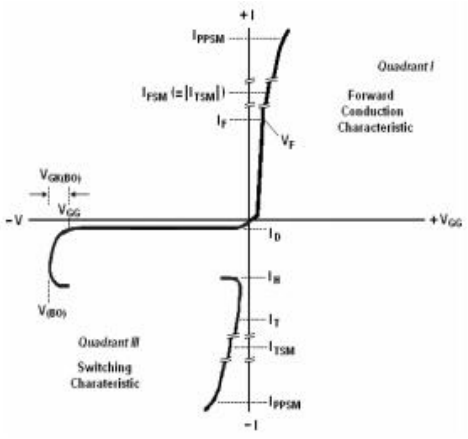

Figure 1. Voltage-Current Characteristic

Unless otherwise noted, all voltages are referenced to the anode

Electrical Characteristics, Rating at 25℃ unless otherwise specified

Parameter		Test Conditions	Min.	Typ.	Max.	Unit
I_D	Off-state current	$V_D=V_{DRM}$, $V_{GK}=0$, $V_{G2}\geq+5V$ T_J =25℃			-5	μA
		$V_D=V_{DRM}$, $V_{GK}=0$, $V_{G2}\geq+5V$ T_J =85℃			-50	
$V_{(BO)}$	Breakover voltage	2/10μs, I_{PP}=-56A, R_S=45Ω, V_{GG}=-48V, C_G=220nF		-57		V
		1.2/50μs, I_{PP}=-53A, R_S=47Ω, V_{GG}=-48V, C_G=220nF		-60		
$V_{GK\ (BO)}$	Gate-cathode impulse breakover voltage	2/10μs, I_{PP}=-56A, R_S=45Ω, V_{GG}=-48V, C_G=220nF		9		V
		1.2/50μs, I_{PP}=-53A, R_S=47Ω, V_{GG}=-48V, C_G=220nF		12	20	
V_F	Forward voltage	I_F =5A, T_W =200μs			3	V
V_{FRM}	Peak forward recovery voltage	2/10μs, I_{PP}=-56A, R_S=45Ω, V_{GG}=-48V, C_G=220nF		6		V
		1.2/50μs, I_{PP}=-53A, R_S=47Ω, V_{GG}=-48V, C_G=220nF		8		
I_H	Holding current	I_T=-1A, di/dt=1A/ms, V_{GG}=-48V	-150			mA
I_{GKS}	Gate reverse current	$V_{GG}=V_{GK}=V_{GKRM}$, V_{KA}=0 T_J =25℃			-5	μA
		$V_{GG}=V_{GK}=V_{GKRM}$, V_{KA}=0 T_J =85℃			-50	
I_{GT}	Gate trigger current	I_T=-3A, $t_{p(g)}\geq$20μs, V_{GG}=-48V			5	mA
V_{GT}	Gate-cathode trigger voltage	I_T=-3A, $t_{p(g)}\geq$20μs, V_{GG}=-48V		2.5	4	V
Q_{GS}	Gate switching charge	1.2/50μs, I_{PP}=-53A, R_S=47Ω, V_{GG}=-48V, C_G=220nF		0.1		μC
C_{KA}	Cathode-anode off- state capacitance	F=1MHz, V_D=1V, I_G=0 V_D=-3V			100	pF
		F=1MHz, V_D=1V, I_G=0 V_D=-48V			50	

Typical Characteristics

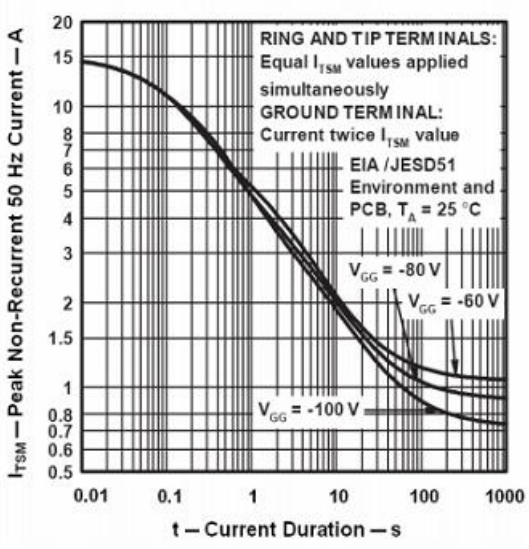

Figure 2. Non-repetitive Peak On-State Current Against Duration

Dimensions (SOP-8)

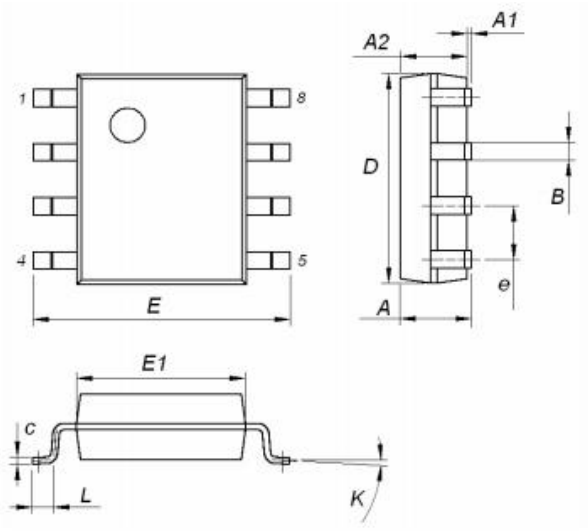

Symbol	Dimension (mm)		
	Min	Typ	Max
A			1.75
A1	0.1		0.25
A2	1.35	1.55	1.75
B	0.35	0.42	0.49
C	0.19		0.25
D	4.8	4.9	5.0
E	5.8	6.0	6.2
E1	3.8	3.95	4.0
e		1.27	
L	0.4		0.9
K	0°		8°

Tape Package Information

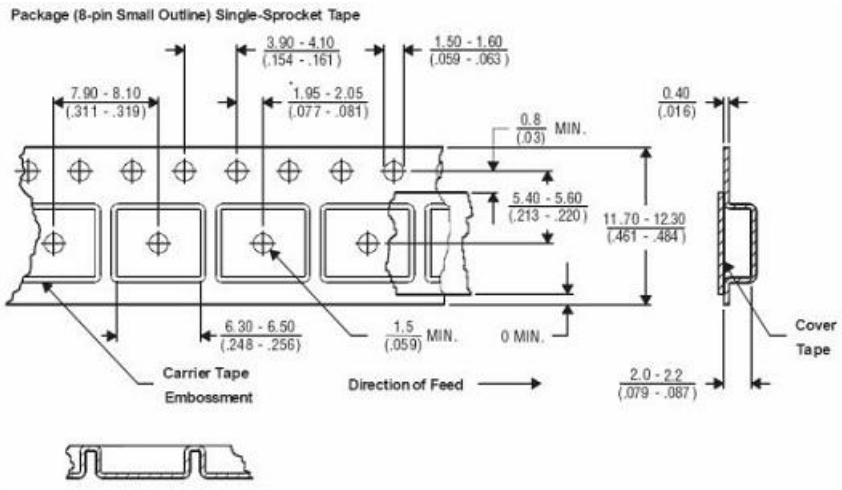

DIMENSIONS ARE: MILLIMETERS (INCHES)

NOTES: A. Taped devices are supplied on a reel of the following dimensions:

Reel diameter:	330 +0.0/-4.0 (12.99 +0.0/-.157)
Reel hub diameter:	100 ±2.0 (3.937 ±.079)
Reel axial hole:	13.0 ±0.2 (.512 ±.008)

B. 2500 devices are on a reel.

Package	Description	Packing Quantity	Delivery Time	
P61089B	SOP-8 Reel Pack	2500 PCS	in stock / 4days	Produce / 12days