CURRENT SENSOR

P411810 SERIES

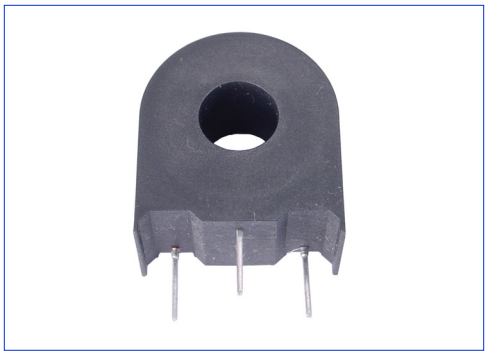

- RoHS Compliant Product
- Operating Temperature: -40°C to +85°C
- Peak Current Sensing: 20A and 40% Duty Cycle
- Hipot: 1500V_{RMS} Min
- Operating Frequency: 20KHz to 50KHz
- Inductance Tested at 15.75KHz 0.1 V_{RMS}

ELECTRICAL SPECIFICATION @ 25°C

Part number P411810-	OCL (mH Min)	Turns (±2% Max)	DCR (Ω Max)	SCHEMATIC	LOAD (Ω)
50A	5	50	0.6	A	50
100A	20	100	1.2	A	100
200A	80	200	4.0	A	200
300A	180	300	11	A	300
50B	5	50CT	0.6	B	50
100B	20	100CT	1.2	B	100
200B	80	200CT	4.0	B	200
300B	180	300CT	11	B	300

Mechanical

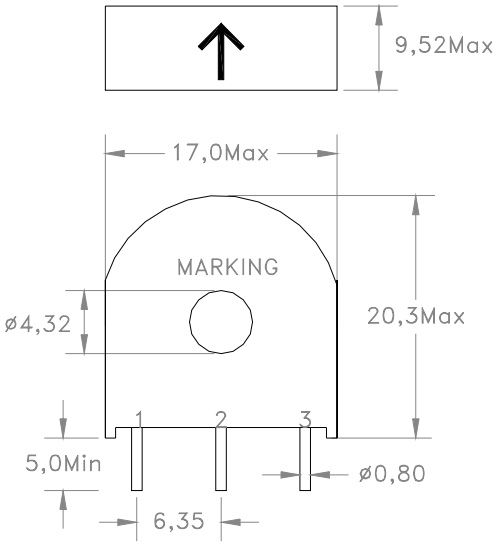

Schematic

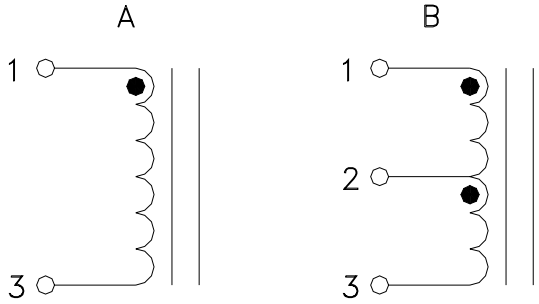

Dimensions
Unless otherwise specified, all tolerances are:
inch: .XX : ± 0.015 .XXX : ±0.004
mm: X,X : ± 0,38 X,XX : ±0,10

Product performance is limited to specified parameter. Data is subject to change without prior notice.

P411810-XX
0546JW

2463 208th, Ste. 205
Torrance, CA 90501
Phone: (310)533-1455
Fax: (310)533-1853
http://www.mpsind.com
Email: sales@mpsind.com