PRODUCT DATA SHEET

ULTRA LOW DISTORTION MICROPROFILE SMD LINE MATCHING TRANSFORMER

P3181

Features

* Surface Mount
* Lead-free (Pb-free)
* Ultra low distortion
* RoHS compliant
* 7mm seated height
* Vacuum encapsulated
* IEC 60950 and UL 60950 certified
* UL Recognized Component

Applications

* V.90 and V.92 (56kbps) modems
* Portable computers
* Fax/Modems

DESCRIPTION

P3181 is an ultra-low distortion microprofile transformer for applications where high performance and safety isolation to international standards are required in an extremely small case size.

Designed specifically as a surface mount device, the P3181 features a 7mm seated height and is offered in the same package as the now familiar P2781 and P3081. The part is compliant with RoHS Directive 2002/95/EC, and suitable for lead-free and conventional placement and reflow.

Despite the subminiature size, the performance is superior to that of much larger components. The P3181 offers reinforced insulation, is ideal for data communications at very high data rates, and can be matched to both 600Ω and complex impedance telephone lines.

P3181 incorporates patented innovative features which enable data rates of 56kbps to be achieved.

P3181 is certified to IEC 60950 and UL 60950. P3181 is a UL Recognized Component, and is supported by an IEC CB Test Certificate.

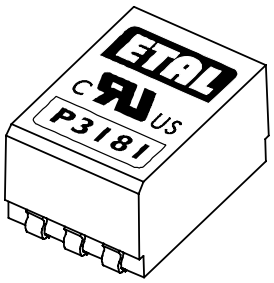

Pb RoHS COMPLIANT

Patented

SPECIFICATIONS

Electrical

At T = 25°C and as circuit Fig. 2 unless otherwise stated.

Parameter	Conditions	Min	Typ	Max	Units
Frequency response	30Hz - 4kHz	-	-	±0.2	dB
Return Loss	200Hz - 4kHz	16	-	-	dB
Third Harmonic Distortion (1) (3)	150Hz -10dBm in line	-	-90	-	dBm
Balance	DC - 5kHz Method TG25	80	-	-	dB
Voltage Isolation (2)	50Hz DC	3.88 5.5	-	-	kVrms kV
Operating range: Functional Storage (4) Humidity	Ambient temperature	 -25 -40 -	 - - -	 +85 +125 95	 °C °C %R.H.

Lumped equivalent circuit parameters as Fig. 1

DC resistance(3), R_{DCP} R_{DCS}	Pins 4-6 Pins 1-3	200 220	- -	250 280	Ω Ω
Leakage inductance, ΔL		-	10.8	-	mH
Shunt inductance, Lp	10mV 200Hz	4.7	-	-	H
Shunt loss, Rp	10mV 200Hz	14	-	-	kΩ

Notes

1. Third harmonic typically exceeds other harmonics by 10dB.
2. Components 100% tested at 6.5 kVDC.
3. **Caution:** Passing DC through windings will permanently increase distortion.
   Telephone line current, etc. must be diverted using semiconductor line hold circuit.
4. Excludes shipping materials. Components are dry packed and sealed as shipped. Handle in accordance with IPC/JEDEC J-STD-033 procedure for components classified as IPC/JEDEC J-STD-020 Moisture Sensitivity Level 5a.

Equivalent Circuit
Fig. 1

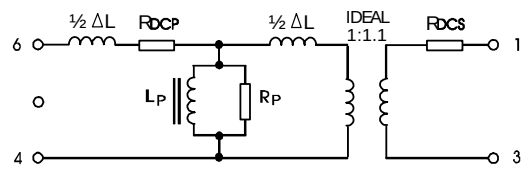

Patented

MATCHING RECOMMENDATIONS

600Ω MATCH AND DISTORTION TEST CIRCUIT

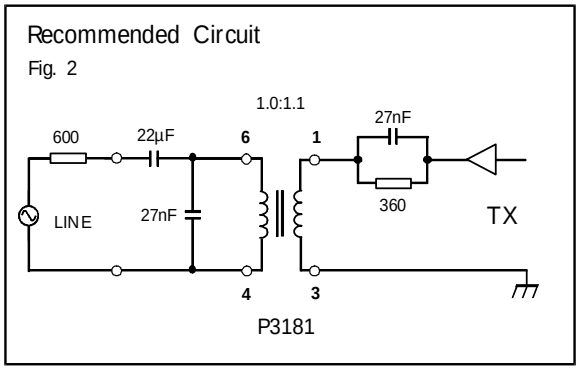

EUROPEAN CTR21 COMPLEX MATCH

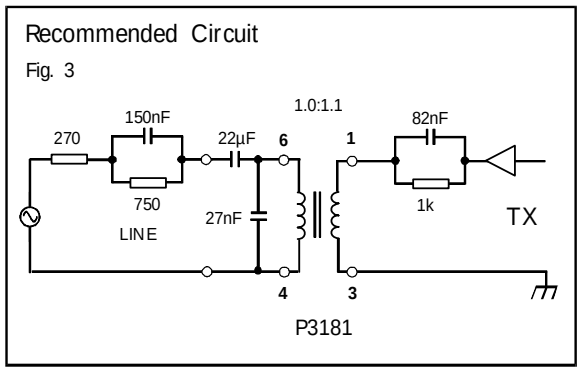

Note - Fig. 2:
Typical distortion: excite from line at 150Hz to yield -10dBm @ 150Hz at line terminals.
Typical THD at line terminals will then be -90dBm (i.e. -80dBc).

For signals received from the line, the signal level present between terminals 1 and 3 of the transformer will be approximately 6dB below the signal sustained at the line terminals.

Note - Figs. 2 and 3:
As line side components (22µF, 27nF) are common to both 600Ω and complex matches, switching between matches can be performed solely on equipment side.

When driven from a balanced (differential) TX drive with unbalanced (single-ended) high impedance recever, the following modifications can assist in giving good transhybrid loss (typically better than 18 dB across voiceband):

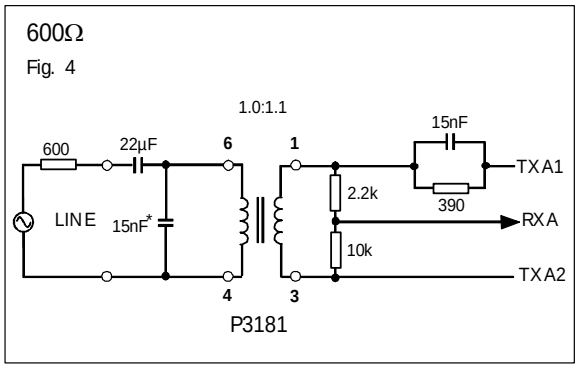

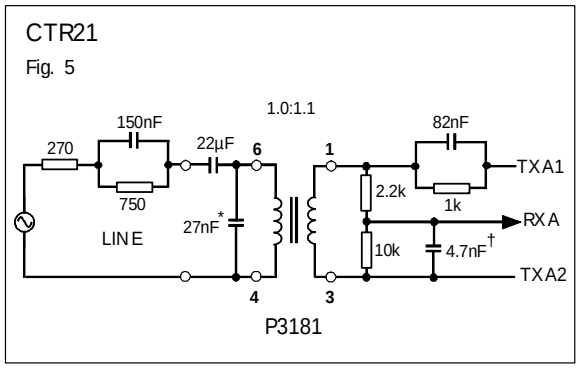

* If components on line side to be unchanged for 600Ω/CTR21, compromise on 22nF.
† 4.7nF can also be fitted on 600Ω circuit with only minor degradation.

Note - Figs. 2, 3, 4 and 5:
As P3181 transformer has a non-unity turns ratio, orientation in circuit should be observed

Patented

CONSTRUCTION

Dimensions

Fig. 6

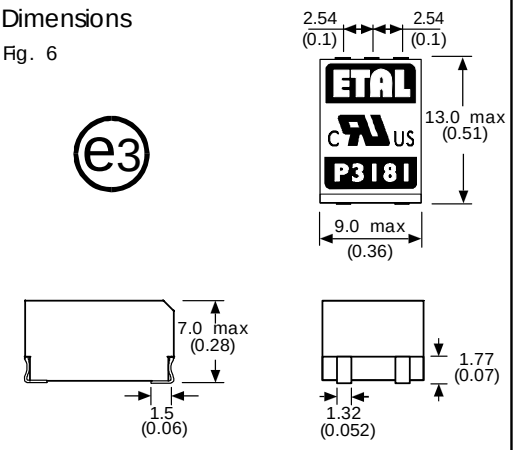

NOTE Dimensions shown are in millimetres (inches)

Connections

Fig. 7

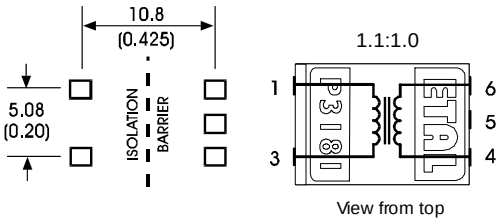

Tolerance ± 0.3mm
Terminals electroplated pure tin (Sn) 5µm minimum.
JESD95 category = e3.
Terminal size : 1.5 (0.06) long, 1.32 (0.05)wide

Dimensions shown are in millimetres (inches).
Geometric centres of outline and pad grid coincide within a tolerance circle of 0.3mmØ.
Observe correct orientation in circuit.

ABSOLUTE MAXIMUM RATINGS

(Ratings of components independent of circuit).

Short term isolation voltage (2s)	4.6 kVrms, 6.5kVDC
DC current	100µA
Storage temperature	-40°C to +125°C
Soldering temperature Profile peak	260°C 10s

Recommended peak body temperature 245°C in accordance with IPC/JEDEC J-STD-033.

INTELLECTUAL PROPERTY RIGHTS

ETAL, P3181, P3081 and P2781 are Trade Marks of Profec Technologies Ltd.
The Trade Mark ETAL is registered at the UK Trade Marks Registry.
Profec Technologies Ltd. is the owner of the design right under the Copyright Designs and Patents Act 1988 and no rights or licences are hereby granted or implied to any third party.
P3181 and its associated circuit embodiment are patented.

British Patent No. 2283195
US Patent No. 5879598
European Patent No. 0725719 and 1082737
China patent No. ZL 99806534.X

© 1998 - 2005 Profec Technologies Ltd.
Reproduction prohibited.

Patented

SAFETY

Manufactured from materials conforming to flammability requirements of UL94V-0.
Distance through reinforced insulation 0.4mm minimum.
Creepage and clearances in circuit are 7mm minimum where PCB pads do not exceed 3mmØ.
Construction complies with IEC 60950-1, EN 60950-1 and UL 60950-1, reinforced insulation, 250Vrms maximum working voltage.

CERTIFICATION

Certified by BSI to IEC 60950 Third Edition (1999) (IEC CB Test Certificate No. GB592W) sub-clauses 1.5, 1.5.1, 1.5.2, 2.9, 2.9.1, 2.9.2, 2.9.3, 2.9.4, 2.9.5, 2.10, 2.10.1, 2.10.2, 2.10.3, 2.10.3.1, 2.10.3.2, 2.10.4, 2.10.5, 2.10.5.1, 2.10.7, 2.10.8, 4.7, 4.7.3, 4.7.3.1, 4.7.3.4, (Flammability Class V-0) ,5.2, 5.2.1, and 5.2.2 for a maximum working voltage of 250Vrms, nominal mains supply voltage not exceeding 250Vrms and a maximum operating temperature of +85°C in Pollution Degree 2 environment, reinforced insulation.

Recognized under the Component Recognition Program of Underwriters Laboratories Inc. to US and Canadian requirements CAN/CSA C22.2 No. 60950-1-03/UL60950-1, First Edition, based on IEC 60950-1, First Edition, maximum working voltage 250Vrms, Pollution Degree 2, reinforced insulation.

UL File number E203175.

Additionally, Profec Technologies certifies all transformers as providing voltage isolation of 3.88kVrms, 5.5kV DC minimum. All shipments are supported by a Certificate of Conformity to current applicable safety standards.

ORDERING CODE

P3181□□

TR = Tape and Reel
(Blank) = Bulk in tubes.

Carrier tape width 24mm,
500 parts per 13” reel.

Patented

E203175

ISO 9001
FM 25326

ETAL Group Oy, Kuormatie 14, FIN-03101, Nummela
Telephone: +358 (0)20 7500 330 Fax: +358 (0)20 7500 333
Website: www.etalgroup.com Email: etalgroup@egruppen.com