Low-Cost Notebook EMI Reduction IC

Features

- Provides up to 15dB of EMI suppression
- FCC approved method of EMI attenuation
- Generates a 1X low EMI spread spectrum clock of the input frequency
- Operates between 20MHz and 38MHz input frequency range
- External loop filter for spread percentage adjustment
- Spreading ranges from ±0.25% to ±2.5%
- Ultra low cycle-to-cycle jitter
- Zero-Cycle slip at small deviations
- 3.3 V Operating Voltage
- Low power CMOS design
- Available in 8-pin SOIC and TSSOP Packages
- Available in Industrial temperature operating range (-40º C to 85º C)

Product Description

The P2779A is a versatile spread spectrum frequency modulator designed specifically for mobile and digital camera and other digital video and imaging applications. The P2779A reduces electromagnetic interference (EMI) at the clock source, which provides system-wide reduction of EMI of all clock dependent signals. The P2779A allows significant system cost savings by reducing the number of circuit board layers and shielding that are traditionally required to pass EMI regulations.

The P2779A uses the most efficient and optimized modulation profile approved by the FCC.

The P2779A modulates the output of a single PLL in order to spread the bandwidth of a synthesized clock and, more importantly, decreases the peak amplitudes of its harmonics. This results in significantly lower system EMI compared to the typical narrow-band signal produced by oscillators and most frequency generators. Lowering EMI by increasing a signal's bandwidth is called spread spectrum clock generation.

Applications

The P2779A is targeted toward mobile 3D graphics chip set applications.

Block Diagram

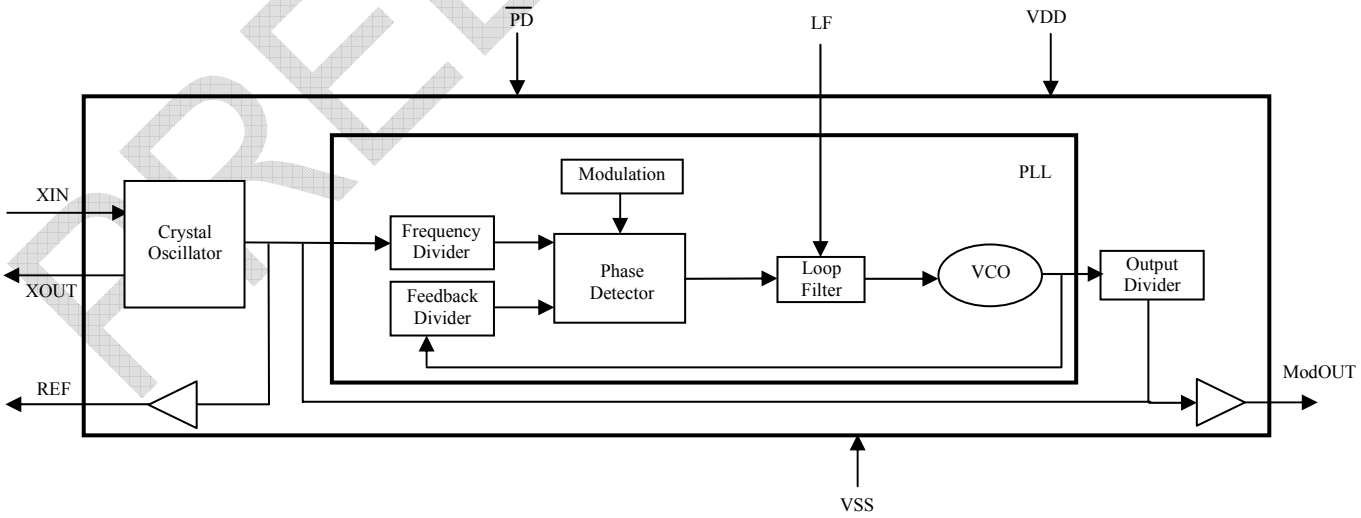

PRELIMINARY

PulseCore Semiconductor Corporation
1715 S. Bascom Ave Suite 200, Campbell, CA 95008 • Tel: 408-879-9077 • Fax: 408-879-9018
www.pulsecoresemi.com

Notice: The information in this document is subject to change without notice.

rev 0.2

Pin Configuration

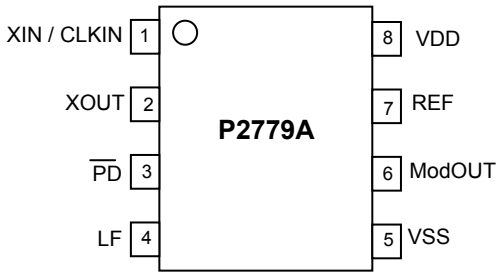

Pin Description

Pin#	Pin Name	Type	Description
1	XIN / CLKIN	I	Connect to crystal or clock input.
2	XOUT	O	Crystal output.
3	$\overline{PD}$	I	Power-down control pin. Pull low to enable power-down mode. This pin has an internal pull-up resistor.[1]
4	LF	I	External loop filter for the PLL. By changing the value of the CRC circuit, the percentage spread can be adjusted accordingly. (See Loop Filter Selection Table for detail values.)
5	VSS	P	Ground connection. Connect to system ground.
6	ModOUT	O	Spread spectrum clock output.
7	REF	O	Provides a reference clock output of the input frequency.
8	VDD	P	Connect to +3.3 V.

Note: 1. Connect to VDD if not used.

Loop Filter Selection Table VDD 3.3 V

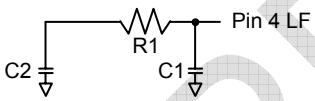

Input (MHz)	FS1	FS0	BW = ± 0.50%			BW = ± 0.75%			BW = ± 1.00%			BW = ± 1.25%		
			C1 (pF)	C2 (pF)	R1 (Ω)	C1 (pF)	C2 (pF)	R1 (Ω)	C1 (pF)	C2 (pF)	R1 (Ω)	C1 (pF)	C2 (pF)	R1 (Ω)
20	1	0	270	100,000	330	270	100,000	560	270	100,000	750	560	100,000	910
21-22	1	0	270	100,000	390	270	100,000	620	270	100,000	866(1%)	560	100,000	1,100
23-24	1	0	270	100,000	510	270	100,000	750	270	10,000	1,000	680	6,800	1,200
25-26	1	0	270	100,000	560	270	100,000	820	270	12,000	1,200	470	4,700	1,200
27-28	1	0	270	100,000	620	270	100,000	1,000	270	6,800	1,200	330	3,300	1,200
29-30	1	0	270	100,000	750	270	100,000	1,100	270	3,900	1,200	330	3,300	1,500
31-32	1	0	270	100,000	820	270	100,000	1,200	270	12,000	2,200	680	6,800	2,200
33-34	1	0	270	100,000	910	270	100,000	1,300	270	10,000	2,200	390	3,900	2,200
35-36	1	0	270	100,000	1,000	270	100,000	1,500	270	5,600	2,200	270	2,700	2,200
37-38	1	0	270	100,000	1,200	270	100,000	1,600	270	3,300	2,200	270	2,700	2,700

Please contact factory for loop filter values if desired spread settings are not listed.

PRELIMINARY

Notice: The information in this document is subject to change without notice.

Spread Spectrum Selection

The P2779A performs zero cycle slip when set at low percentage spreading. This prevents any occurrence of system timing error. The optimal setting should minimize system EMI to the fullest without affecting system performance. The spreading is described as a percentage deviation of the center frequency. (Note that the center frequency is the frequency of the external reference input on XIN/CLKIN, pin 1.)

The P2779A is designed for PC peripheral, networking, notebook PC, and LCD monitor applications. It is optimized for operation from 20MHz to 38MHz. The P2779A's spread percentage selection is determined by the external LF value specified in the Loop Filter Selection Table. The external LF allows the user to fine tune the spread percentage to optimize the EMI reduction benefits of the spread spectrum.

Application Schematic

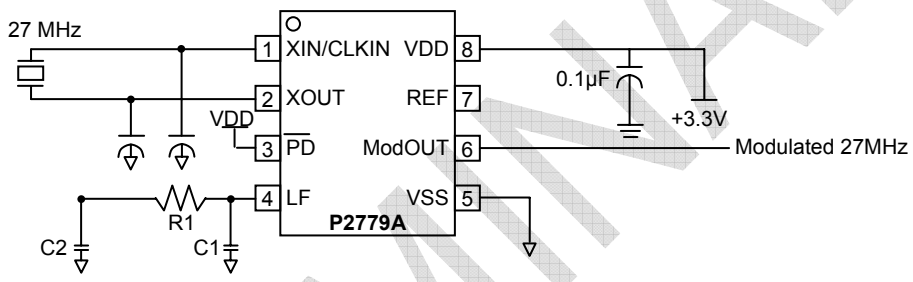

PD selection: Power dissipation can be reduced by completely turning off the IC.

PRELIMINARY

Notice: The information in this document is subject to change without notice.

rev 0.2

Absolute Maximum Ratings

Symbol	Parameter	Rating	Unit
V_{DD}, V_{IN}	Voltage on any pin with respect to Ground	-0.5 to +4.6	V
T_{STG}	Storage temperature	-65 to +125	°C
T_A	Operating temperature	-40 to +85	°C
T_s	Max. Soldering Temperature (10 sec)	260	°C
T_J	Junction Temperature	150	°C
T_{DV}	Static Discharge Voltage (As per JEDEC STD22- A114-B)	2	KV

Note: These are stress ratings only and are not implied for functional use. Exposure to absolute maximum ratings for prolonged periods of time may affect device reliability.

DC Electrical Characteristics

Symbol	Parameter	Min	Typ	Max	Unit
V_{IL}	Input low voltage	VSS - 0.3	-	0.8	V
V_{IH}	Input high voltage	2.0	-	VDD + 0.3	V
I_{IL}	Input low current	-	60	-	µA
I_{IH}	Input high current	-	0	-	µA
I_{XOL}	XOUT output low current (at 0.4 V, V_{DD} = 3.3V)	-	10	-	mA
I_{XOH}	XOUT output high current (at 2.5 V, V_{DD} = 3.3V)	-	10	-	mA
V_{OL}	Output low voltage (V_{DD} = 3.3V, I_{OL} = 20 mA)	-	-	0.4	V
V_{OH}	Output high voltage (V_{DD} = 3.3V, I_{OH} = 20 mA)	2.5	-	-	V
I_{DD}	Static supply current	-	3	-	mA
I_{CC}	Dynamic supply current (3.3 V, 25 pF loading, 32 MHz)	-	12	-	mA
V_{DD}	Operating voltage	3.0	3.3	3.6	V
t_{ON}	Power-up time (first locked cycle after power up)	-	7	-	mS
Z_{OUT}	Clock output impedance	-	28	-	Ω

AC Electrical Characteristics

Symbol	Parameter	Min	Typ	Max	Unit
f_{IN}	Input frequency	20	-	38	MHz
f_{OUT}	Output frequency	20	-	38	MHz
t_{LH}[1]	Output rise time (measured at 0.8 V to 2.0 V)	-	1	-	nS
t_{HL}[1]	Output fall time (measured at 2.0 V to 0.8 V)	-	1	-	nS
t_{JC}	Jitter (Cycle to cycle)	-	±175	-	pS
t_D	Output duty cycle	45	50	55	%

Note: 1. t_{LH} and t_{HL} are measured into a capacitive load of 15 pF

PRELIMINARY

Notice: The information in this document is subject to change without notice.

Package Information

8-lead (150-mil) SOIC Package

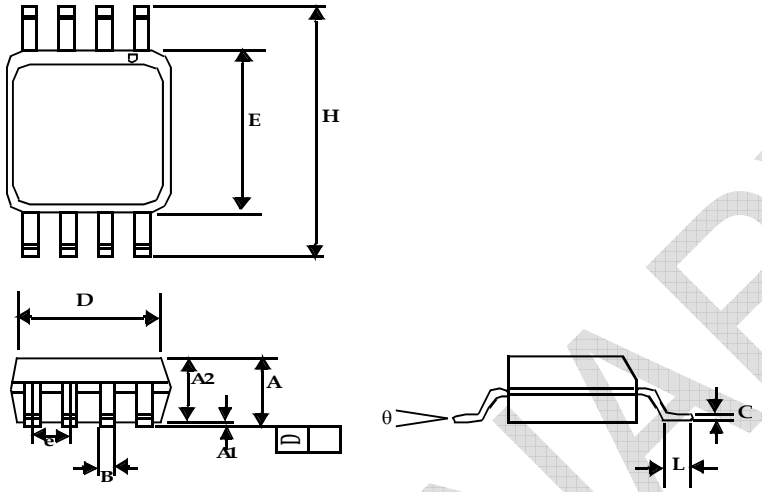

Symbol	Dimensions			
	Inches		Millimeters	
	Min	Max	Min	Max
A1	0.004	0.010	0.10	0.25
A	0.053	0.069	1.35	1.75
A2	0.049	0.059	1.25	1.50
B	0.012	0.020	0.31	0.51
C	0.007	0.010	0.18	0.25
D	0.193 BSC		4.90 BSC	
E	0.154 BSC		3.91 BSC	
e	0.050 BSC		1.27 BSC	
H	0.236 BSC		6.00 BSC	
L	0.016	0.050	0.41	1.27
θ	0°	8°	0°	8°

Note: Controlling dimensions are millimeters
SOIC – 0.074 grams unit weight

PRELIMINARY

Notice: The information in this document is subject to change without notice.

8-lead Thin Shrunk Small Outline Package (4.40-MM Body)

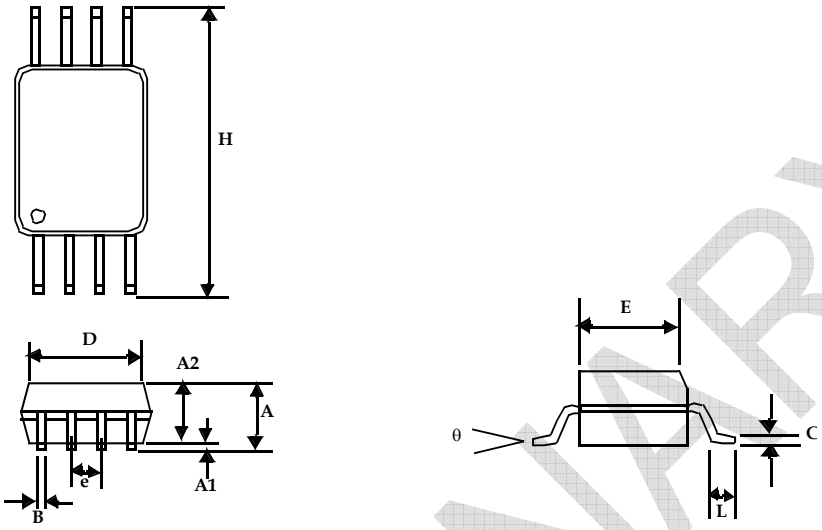

Symbol	Dimensions			
	Inches		Millimeters	
	Min	Max	Min	Max
A		0.043		1.10
A1	0.002	0.006	0.05	0.15
A2	0.033	0.037	0.85	0.95
B	0.008	0.012	0.19	0.30
c	0.004	0.008	0.09	0.20
D	0.114	0.122	2.90	3.10
E	0.169	0.177	4.30	4.50
e	0.026 BSC		0.65 BSC	
H	0.252 BSC		6.40 BSC	
L	0.020	0.028	0.50	0.70
θ	0°	8°	0°	8°

Note: Controlling dimensions are millimeters
TSSOP – 0.0325 grams unit weight

PRELIMINARY

Notice: The information in this document is subject to change without notice.

rev 0.2

Ordering Information

Part number	Marking	Package Type	Temperature
P2779AF-08-ST	P2779AF	8-Pin SOIC, Tube, Pb Free	Commercial
P2779AF-08-SR	P2779AF	8-Pin SOIC, Tape and Reel, Pb Free	Commercial
P2779AG-08-ST	P2779AG	8-Pin SOIC, Tube, Green	Commercial
P2779AG-08-SR	P2779AG	8-Pin SOIC, Tape and Reel, Green	Commercial
I2779AF-08-ST	I2779AF	8-Pin SOIC, Tube, Pb Free	Industrial
I2779AF-08-SR	I2779AF	8-Pin SOIC, Tape and Reel, Pb Free	Industrial
I2779AG-08-ST	I2779AG	8-Pin SOIC, Tube, Green	Industrial
I2779AG-08-SR	I2779AG	8-Pin SOIC, Tape and Reel, Green	Industrial
P2779AF-08-TT	P2779AF	8-Pin TSSOP, Tube, Pb Free	Commercial
P2779AF-08-TR	P2779AF	8-Pin TSSOP, Tape and Reel, Pb Free	Commercial
P2779AG-08-TT	P2779AG	8-Pin TSSOP, Tube, Green	Commercial
P2779AG-08-TR	P2779AG	8-Pin TSSOP, Tape and Reel, Green	Commercial
I2779AF-08-TT	I2779AF	8-Pin TSSOP, Tube, Pb Free	Industrial
I2779AF-08-TR	I2779AF	8-Pin TSSOP, Tape and Reel, Pb Free	Industrial
I2779AG-08-TT	I2779AG	8-Pin TSSOP, Tube, Green	Industrial
I2779AG-08-TR	I2779AG	8-Pin TSSOP, Tape and Reel, Green	Industrial

Device Ordering Information

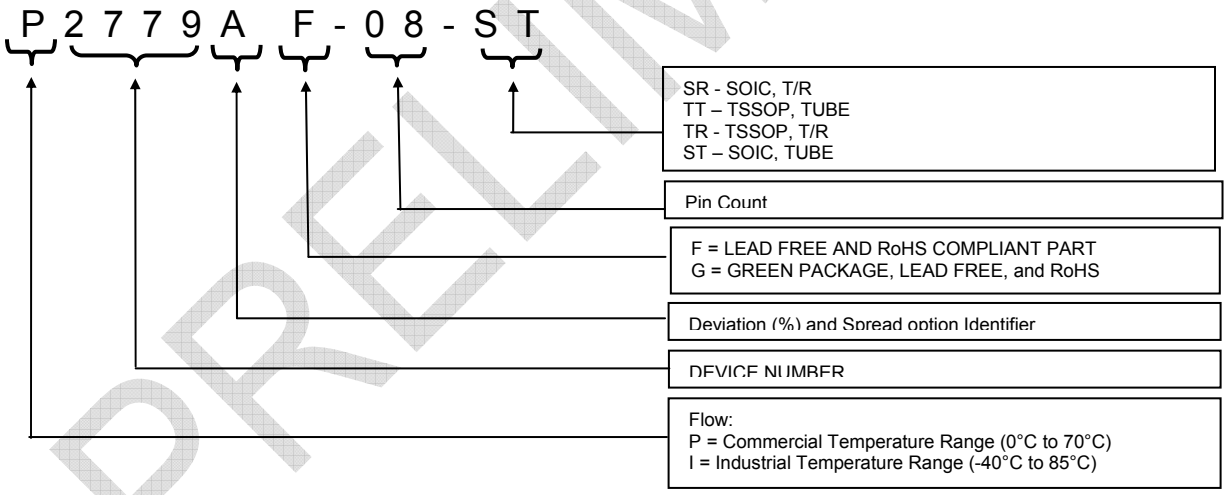

PRELIMINARY

Licensed under US patent #5,488,627, #6,646,463 and #5,631,920.

Notice: The information in this document is subject to change without notice.

PRELIMINARY

PulseCore Semiconductor Corporation
1715 S. Bascom Ave Suite 200
Campbell, CA 95008
Tel: 408-879-9077
Fax: 408-879-9018
www.pulsecoresemi.com

Copyright © PulseCore Semiconductor
All Rights Reserved
Preliminary Information
Part Number: P277A
Document Version: v0.2

Note: This product utilizes US Patent # 6,646,463 Impedance Emulator Patent issued to PulseCore Semiconductor, dated 11-11-2003

© Copyright 2007 PulseCore Semiconductor Corporation. All rights reserved. Our logo and name are trademarks or registered trademarks of PulseCore Semiconductor. All other brand and product names may be the trademarks of their respective companies. PulseCore reserves the right to make changes to this document and its products at any time without notice. PulseCore assumes no responsibility for any errors that may appear in this document. The data contained herein represents PulseCore's best data and/or estimates at the time of issuance. PulseCore reserves the right to change or correct this data at any time, without notice. If the product described herein is under development, significant changes to these specifications are possible. The information in this product data sheet is intended to be general descriptive information for potential customers and users, and is not intended to operate as, or provide, any guarantee or warrantee to any user or customer. PulseCore does not assume any responsibility or liability arising out of the application or use of any product described herein, and disclaims any express or implied warranties related to the sale and/or use of PulseCore products including liability or warranties related to fitness for a particular purpose, merchantability, or infringement of any intellectual property rights, except as express agreed to in PulseCore's Terms and Conditions of Sale (which are available from PulseCore). All sales of PulseCore products are made exclusively according to PulseCore's Terms and Conditions of Sale. The purchase of products from PulseCore does not convey a license under any patent rights, copyrights; mask works rights, trademarks, or any other intellectual property rights of PulseCore or third parties. PulseCore does not authorize its products for use as critical components in life-supporting systems where a malfunction or failure may reasonably be expected to result in significant injury to the user, and the inclusion of PulseCore products in such life-supporting systems implies that the manufacturer assumes all risk of such use and agrees to indemnify PulseCore against all claims arising from such use.