P26-Series Pushbutton Switches

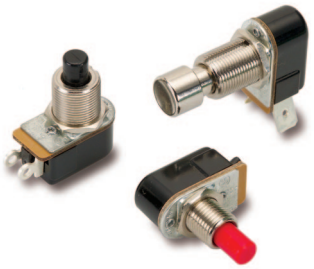

The P26-Series pushbutton switches are single pole, AC rated for 8 amps at 125 VAC and suitable for shallow back panel applications. These switches are momentary action with a medium actuation force (13 oz. typical). The P26-Series switch is equipped with a slow-make, slow-break contact mechanism. Typical applications include usage for an Alarm or Warning Device, as well as Test and Measurement Equipment.

Dielectric Strength
UL/CSA: 1000V - live to dead metal parts
Electrical Life
25,000 cycles
Mechanical Life
100,000 cycles
Operating Temperature
32°F to 85°F (0°C to +85°C)

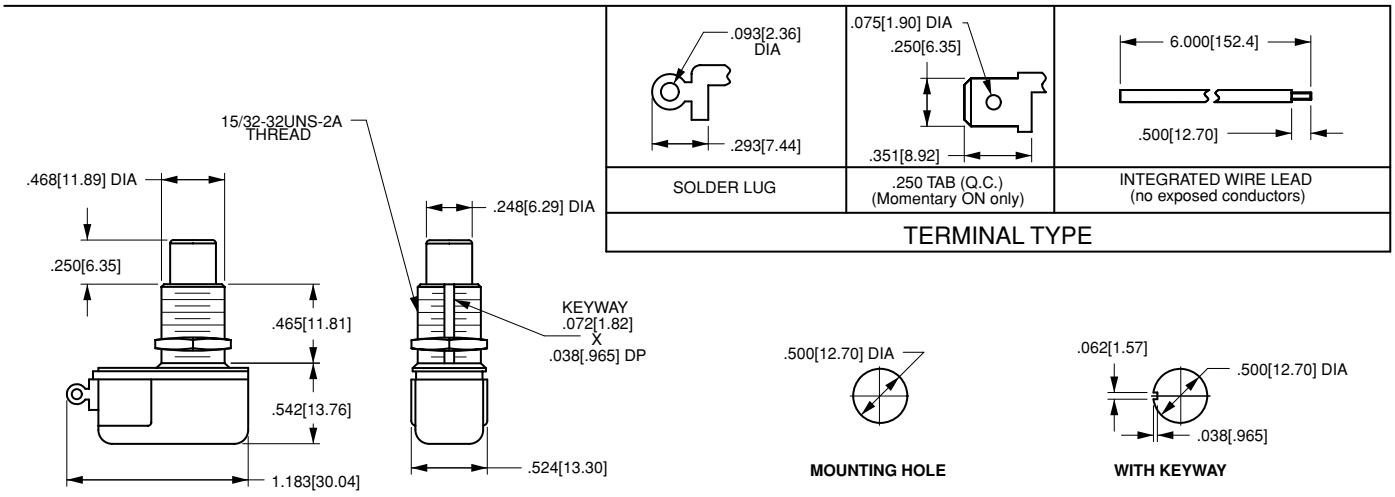

P26L - 1D - BL

1 Base Part Number — 2 Bushing Style — 3 Button Style/Color

1 BASE PART NUMBER: SERIES/POLES/CIRCUITRY/RATING[1]/TERMINATION

	solder lug	*.250 tab*	*wire leads*
Single Pole			
3A 250VAC, 6A 125 VAC, 3/4A 125V			
OFF - (ON)	**P26A**	**P26B**	**P26F**
ON - (OFF)	**P26L**	-	**P26T**
3A 277VAC, 6A 125 VAC			
OFF - (ON)	**P267A**	**P267B**	**P267F**
ON - (OFF)	**P267L**	-	**P267T**

2 BUSHING STYLE

	length	*diameter*
1A	.406	.375
1B	.406	.468
1C	.465	.375
1D	.465	.468

3 BUTTON STYLE/COLOR

BL	black nylon
RD	red nylon
RND MTL[2]	round metal
CON MTL[2]	concave metal

NOTES
1 Additional ratings available. Consult factory for details.
2 Only available with 1D bushing in .502 length.
( ) Indicates momentary function.