Opti - Cap®
P21BN300MA04733

April 2011

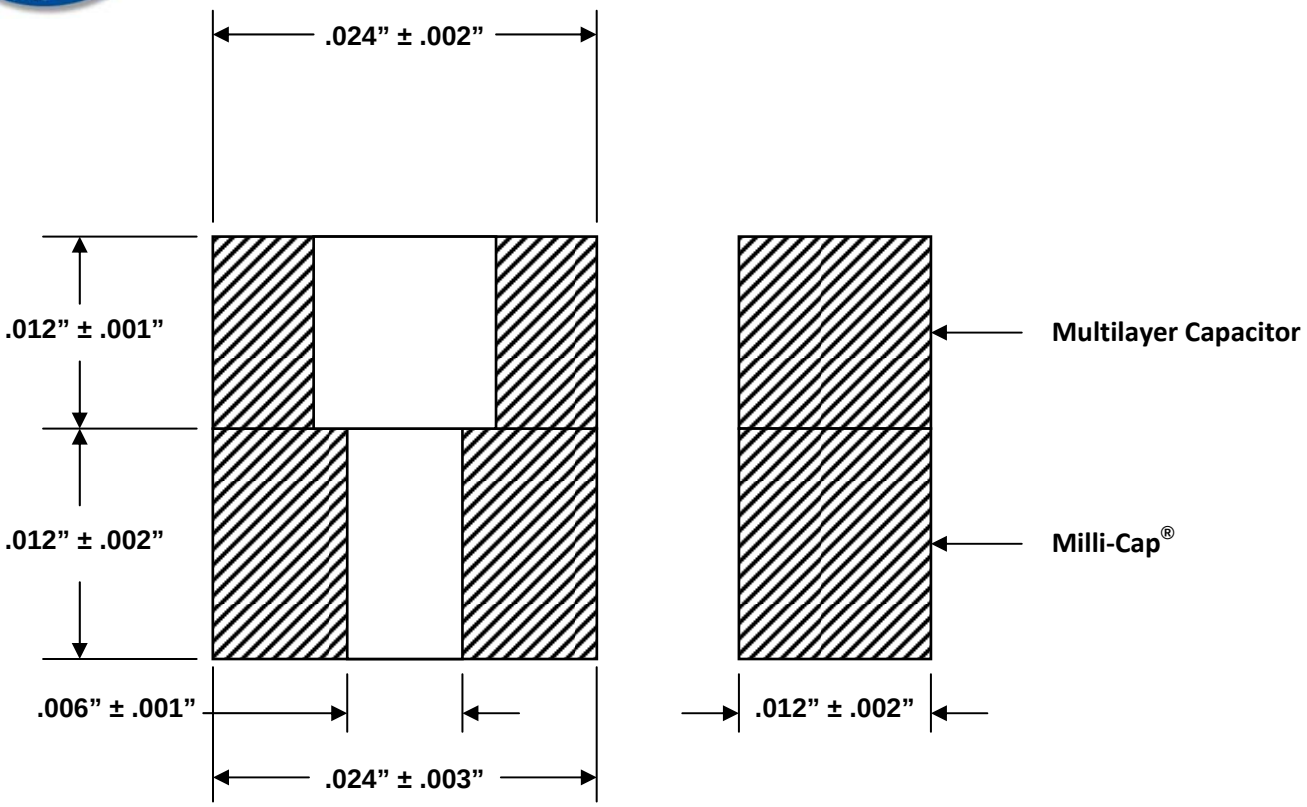

Table 1: Assembly Part Number						
Milli-Cap®					MLC	DLI Assembly Outline Drawing
Product Code	Case Size Code	Material Code	Capacitance Code	Capacitance Tolerance Code	MLC Reference Code	
P	**21**	**BN**	**300**	**M**	**A**	**04733**
P = Milli-Cap® or Opti-Cap®	21 = 0201	X7R*	300 = 30 x 10^0 30pF	M = ± 20%	See Table 2	
*X7R = Maximum Capacitance Change of ±15% from -55°C to +125°C						

Notes:

1. Termination Metallization: 7.5 ± 4.5 Micro Inches Au over a minimum 50 Micro Inches Ni
2. Assembly Rated DC Working Voltage: 10VDC
3. Total Assembly Capacitance @ 1KHz: 100nF ± 20%
4. **RoHS Compliant**

Table 2: Multilayer Capacitor Electrical Characteristics							
MLC Code	Capacitance @ 1KHz	Capacitance Tolerance	Temperature Characteristic	Working Voltage	Insulation Resistance @ 25°C	Dielectric Withstanding Voltage	Maximum Dissipation Factor
A	100nF	± 20%	X5R**	10VDC	>100 MΩ	20V	0.100
**X5R = Maximum Capacitance Change of ±15% from -55°C to +85°C							

Dielectric Laboratories Inc.
2777 Route 20 East, Cazenovia, NY 13035
Phone: 315-655-8710 Fax: 315-655-8179
Email: sales@dilabs.com Web: http://www.dilabs.com

- ***Recommended Attachment to Soft or Hard Substrate Using Conductive Epoxy:***
  - ***Recommended Micro Strip Layout:***

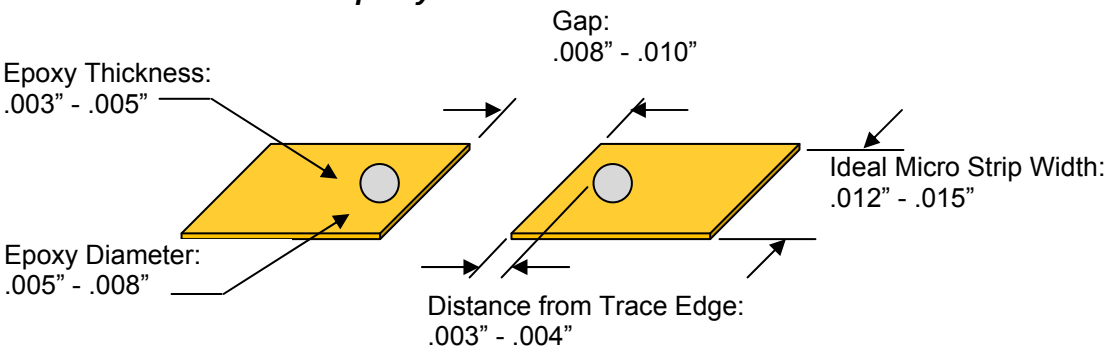

  - ***Attachment Method***
    1. Place a single drop of conductive epoxy onto each micro-strip as illustrated; the edge of the epoxy shall be at least .003”- .004” back from the edge of the trace to prevent filling the gap with epoxy.
    2. Centering the termination gap of the Milli-Cap® within the gap in the micro strip, press with careful, even pressure onto the micro strip ensuring the terminations make good contact with the epoxy drops.
    3. Cure according to the epoxy manufacturer’s preferred schedule
       - Typically 125°C to 150°C Max.
    4. After curing, inspect joint for epoxy shorts across the termination and micro strip gaps that would cause a short across the cap.

Isopropanol, and Methanol are both safe to use to pre clean Opti-Caps®

Isopropanol, and Methanol are not to be used after mounting with conductive epoxy as they act as a solvent!

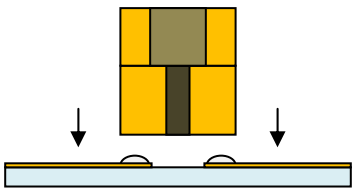

Attach with Milli-Cap® Down

- ***Recommended Attachment to Soft or Hard Substrate Using Solder:***
  - ***Recommended Micro Strip Layout:***

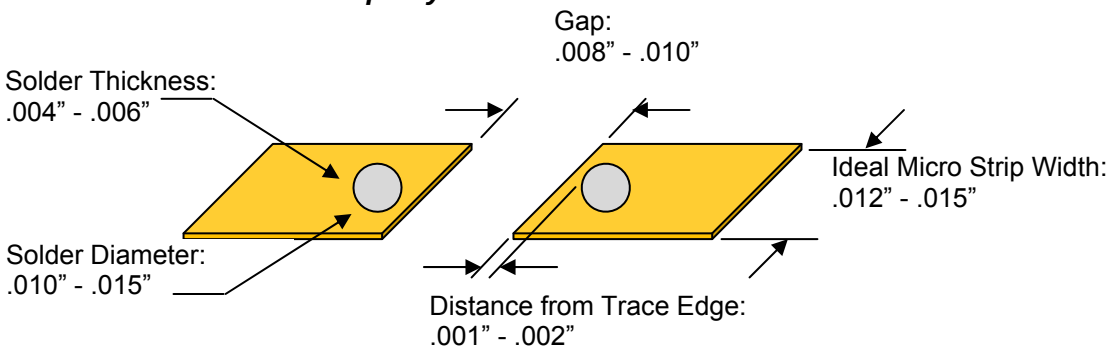

  - ***Attachment Method***
    1. Place a single drop of solder paste onto each micro-strip as illustrated; the edge of the epoxy shall be at least .001”- .002” back from the edge of the trace to prevent filling the gap with solder.
    2. Centering the termination gap of the Milli-Cap® within the gap in the micro strip, press with careful, even pressure onto the micro strip ensuring the terminations make good contact with the drops of solder paste.
    3. Reflow according to the solder manufacturer’s preferred profile, ensuring the reflow temperature **does not exceed 250°C**.
    4. After the reflow step is completed, inspect joint for voids or excess flux and non-reflowed solder balls that can degrade performance or cause shorts across the gaps. Proper cleaning after the reflow process is crucial to avoiding performance degradation and discovering poor solder joints.

Isopropanol, and Methanol are both safe to use with soldered Opti-Caps®.

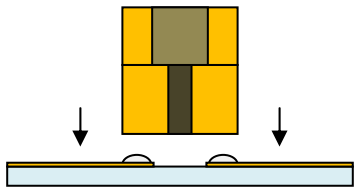

Attach with Milli-Cap® Down

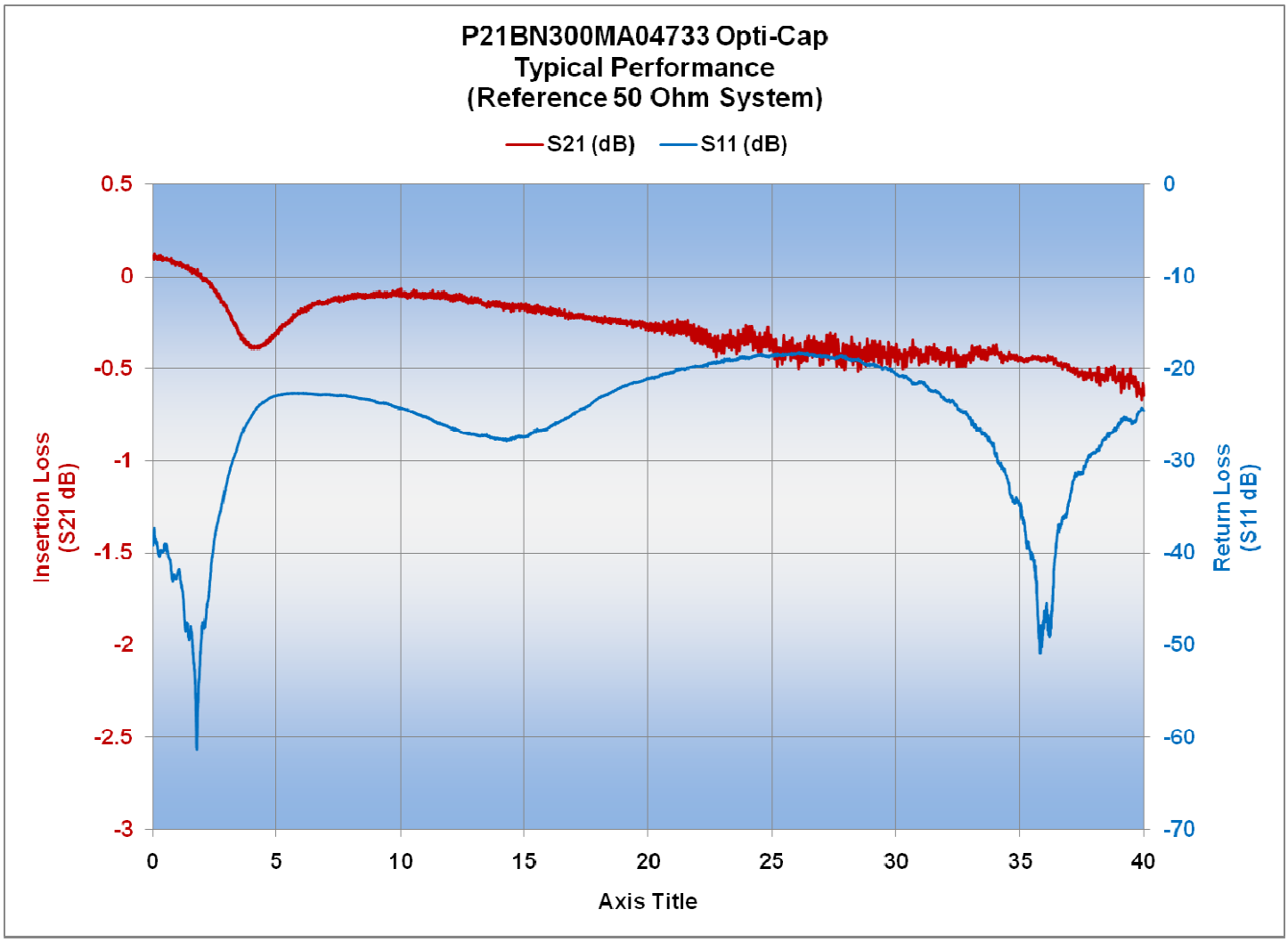

Metric Conversion	
1 Micro Inch	0.0254um
1”	25.4mm

Dielectric Laboratories Inc.
2777 Route 20 East, Cazenovia, NY 13035
Phone: 315-655-8710 Fax: 315-655-8179
Email: sales@dilabs.com Web: http://www.dilabs.com