P1786 *LINEAR INTEGRATED CIRCUIT*

PWM CONTROL 3A STEP-DOWN CONVERTER

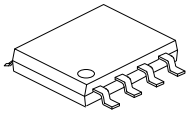

SOP-8

■ DESCRIPTION

UTC **P1786** consists of 3A step-down switching regulator control which includes a reference voltage source, oscillation circuit, error amplifier, internal PMOS and etc with PWM.

UTC **P1786** can provide low-ripple power, high efficiency, and excellent transient characteristics. An enable function, an over current protect and short circuit protect function are built inside, so the operation frequency can be reduced from 300KHz to 30KHz when OCP or SCP happens. The PWM control circuit can vary the duty ratio linearly from 100 down to 0%. This converter also includes an error amplifier circuit as well as a soft-start circuit that prevents overshoot at startup. Also, to minimum external component counts for an internal compensation block is built in.

These ICs can work as step-down switching regulators with the addition of an internal P-channel Power MOS, a coil, capacitors, and a diode connected externally. They provide such outstanding features: low current consumption. It is also suitable for the operation via an AC adapter because this converter accommodate an input voltage up to 23V.

■ FEATURES

* Input voltage: 4.0V ~ 23V
* Output voltage: 0.8V ~ V_{CC}
* Duty ratio: 0% to 100% PWM control
* Oscillation frequency: 300KHz typ.
* Soft-start, current limit, enable function
* Thermal shutdown function
* Built-in internal SW P-channel MOS

■ ORDERING INFORMATION

Ordering Number		Package	Packing
Lead Free	Halogen Free		
P1786L-S08-R	P1786G-S08-R	SOP-8	Tape Reel

P1786L-S08-R
(1)Packing Type
(2)Package Type
(3)Lead Plating

(1) R: Tape Reel
(2) S08: SOP-8
(3) G: Halogen Free, L: Lead Free

Copyright © 2009 Unisonic Technologies Co., Ltd

■ PIN CONFIGURATION

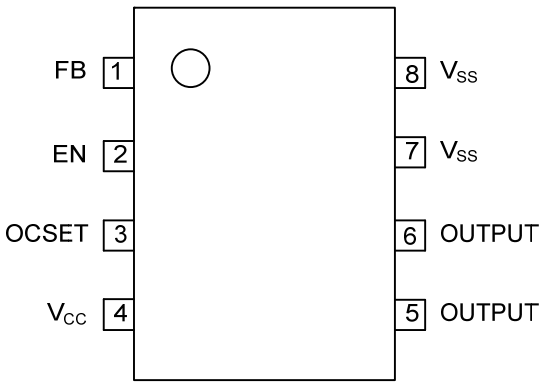

■ PIN DESCRIPTIONS

PIN NO.	PIN NAME	I/O	DESCRIPTION
1	FB	I	Feedback pin.
2	EN	I	Chip enable, H: enable step-down function L: chip disable
3	OCSET	I	Add an external resistor to set max output current.
4	V_{CC}		IC power supply pin
5, 6	Output	O	Switch Pin. Connect external inductor/diode here. Minimize trace area at this pin to reduce EMI.
7, 8	V_{SS}		GND Pin

■ BLOCK DIAGRAM

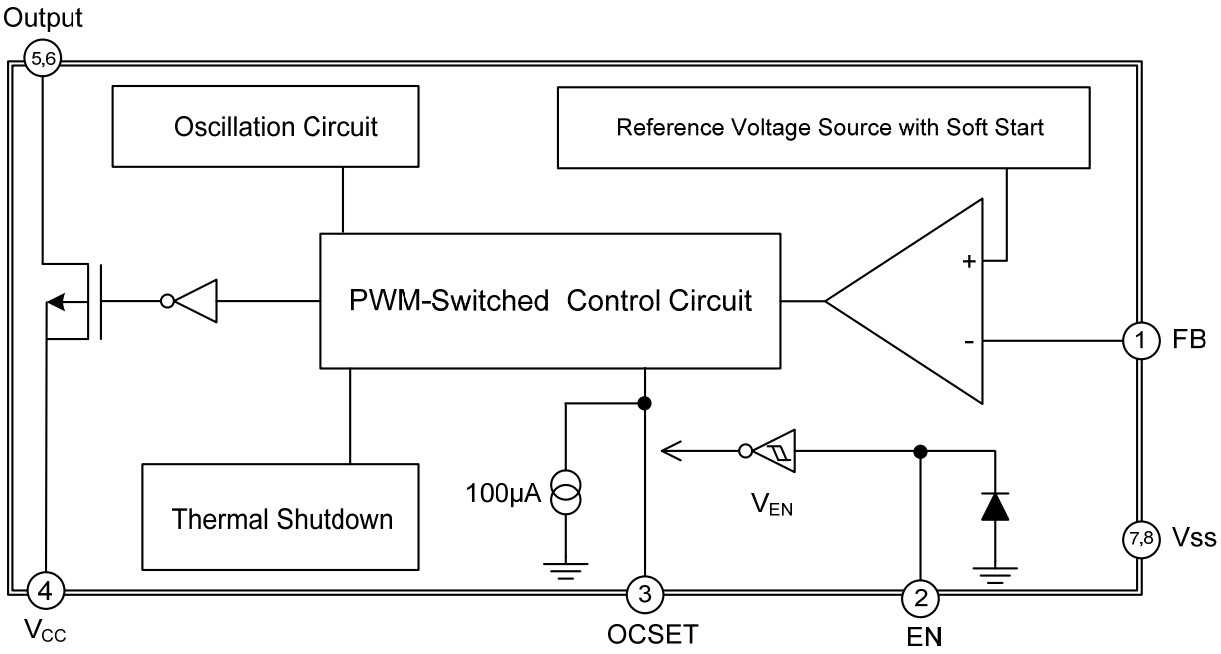

■ ABSOLUTE MAXIMUM RATINGS

PARAMETER	SYMBOL	RATING	UNIT
V_{CC} Pin Voltage	V_{CC}	V_{SS} - 0.3 ~ V_{SS} + 25	V
Feedback Pin Voltage	V_{FB}	V_{SS} - 0.3 ~ V_{CC}	V
EN Pin Voltage	V_{EN}	V_{SS} - 0.3 ~ V_{IN} + 0.3	V
Switch Pin Voltage	V_{OUT}	V_{SS} - 0.3 ~ V_{IN} + 0.3	V
Power Dissipation	P_D	Internally limited	
Operating Temperature	T_{OPR}	-20 ~ +125	°C
Storage Temperature	T_{STG}	-40 ~ +150	°C

Note: Absolute maximum ratings are those values beyond which the device could be permanently damaged. Absolute maximum ratings are stress ratings only and functional device operation is not implied.

■ THERMAL DATA

PARAMETER	SYMBOL	MIN	TYP	MAX	UNIT
Junction to Ambient	θ_{JA}		65		°C/W

■ ELECTRICAL CHARACTERISTICS (V_{IN} = 12V, Ta=25°C, unless otherwise specified)

PARAMETER	SYMBOL	CONDITIONS	MIN	TYP	MAX	UNIT
Input Voltage	V_{IN}		4		23	V
Feedback Voltage	V_{FB}	I_{OUT}=0.1A	0.784	0.8	0.816	V
Feedback Bias Current	$I_{FB(BIAS)}$	I_{OUT}=0.1A		0.1	0.5	μA
Switch Current	I_{SC}		3.5			A
Standby Current	I_{STN-BY}	V_{EN} =0V		10		μA
Line Regulation	$\frac{\Delta V_{OUT}}{V_{OUT}}$	V_{IN} = 5V~23V, I_{OUT}=0.2A		1	2	%
Load Regulation	$\frac{\Delta V_{OUT}}{V_{OUT}}$	I_{OUT} = 0.1 to 3A		0.2	0.5	%
Oscillation Frequency	f_{OSC}	Measure waveform at SW pin	240	300	360	KHz
Frequency of Current Limit or Short Circuit Protect	f_{OSC1}	Measure waveform at SW pin	10	30	60	KHz
EN Pin Input Voltage	V_{SH}	Evaluate oscillation at SW pin	2.0			V
	V_{SL}	Evaluate oscillation stop at SW pin			0.8	V
EN Pin Input Leakage Current	I_{SH}			20		μA
	I_{SL}			-10		μA
OCSET Pin Bias Current	I_{OCSET}		75	90	105	μA
Soft-Start Time	T_{SS}		0.3	2	5	ms
Internal MOSFET $R_{DS(ON)}$	$R_{DS(ON)}$	V_{IN}=5V, V_{FB}=0V		110	150	mΩ
		V_{IN}=12V, V_{FB}=0V		70	100	mΩ
Efficiency	η	V_{IN} = 12V, V_{OUT} = 5V, I_{OUT} = 3A		91		%

■ FUNCTION DESCRIPTION

PWM Control

The UTC **P1786** consists of DC/DC converters which employ a PWM system. In this DC/DC converter, the pulse width varies in a range from 0 to 100% which is according to the load current. Cause the switching frequency remains constant the ripple voltage which produced by the switching can be removed easily through a filter. Therefore, these converters provide a low-ripple power over broad ranges of input voltage and load current.

Under Voltage Lockout

The under voltage lockout circuit makes sure that the outputs of high-side MOSFET driver remain in the off state after the supply voltage drops below 3.3V. When V_{CC} rises above 3.5V normal operation resumes.

$R_{DS(ON)}$ Current Limiting

The current limit threshold is fixed by the external resistor which is connected from V_{CC} supply to OCSET. An over-current condition is triggered when the PWM voltage is less than the voltage at OCSET.

$I_{LOAD} \times R_{DS(ON)} = I_{OCSET} \times R_{OCSET}$

above formula is setting the current limit value.

■ TEST CIRCUITS

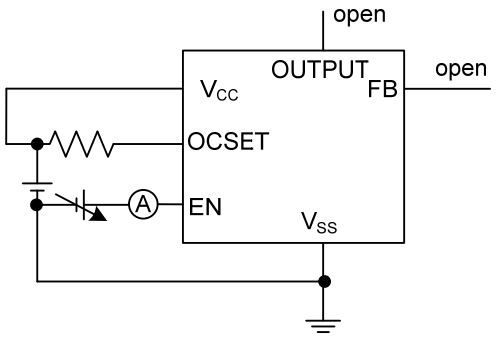

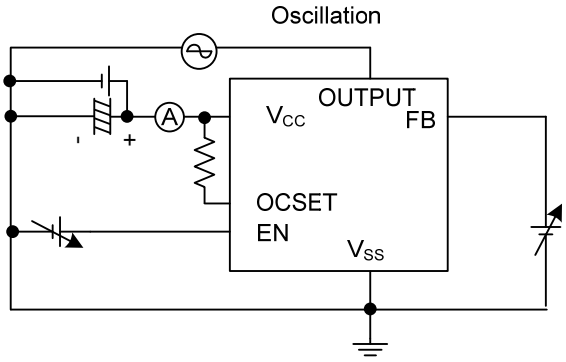

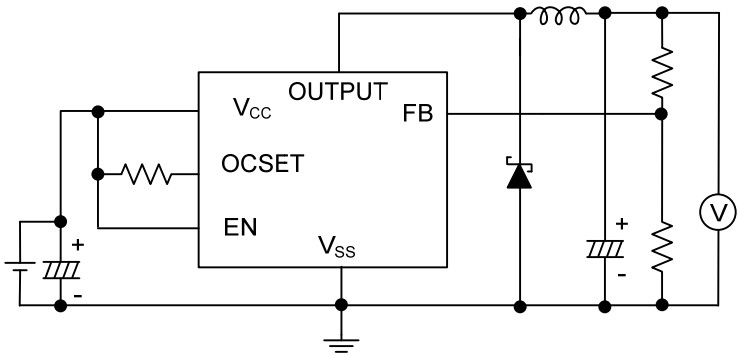

■ TYPICAL APPLICATION CIRCUIT

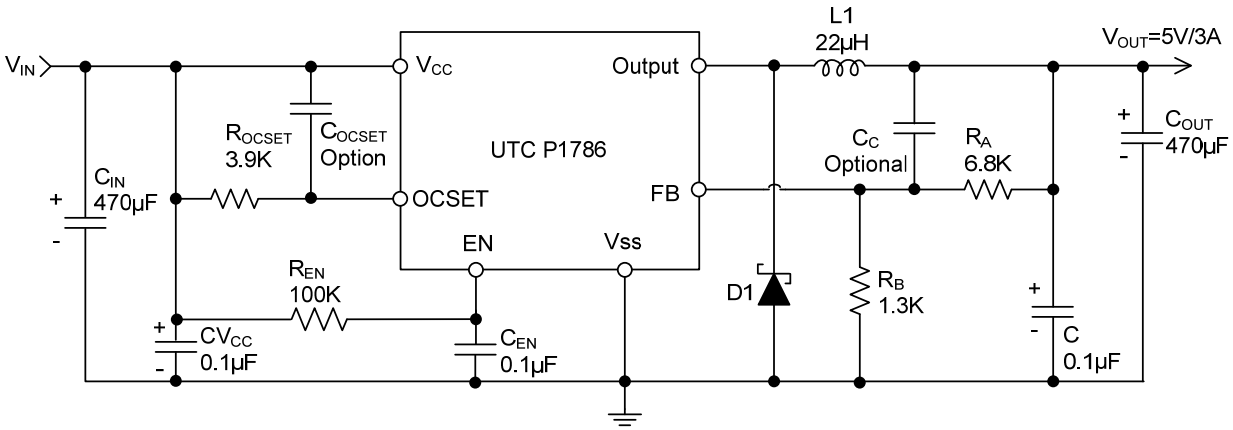

Note: $V_{OUT} = V_{FB} \times (1+R_A/R_B)$, R_B=0.7K~5K ohm

V_{IN}=12V, I_{MAX}=3A			
V_{OUT}	2.5V	3.3V	5V
L1 Value	15uH	18uH	22uH

■ TYPICAL CHARACTERISTICS

Input Voltage vs. Frequency

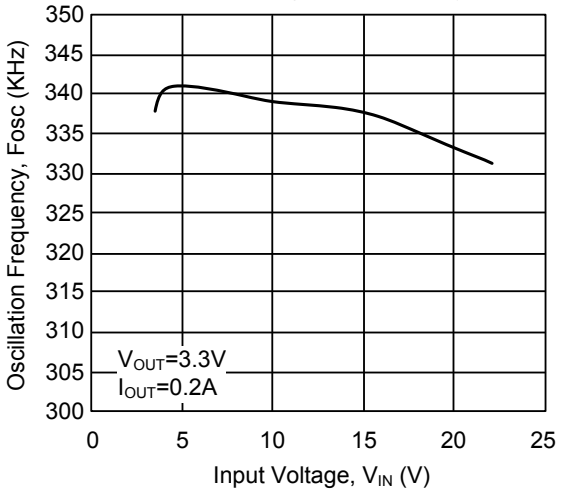

Input Voltage vs. FB

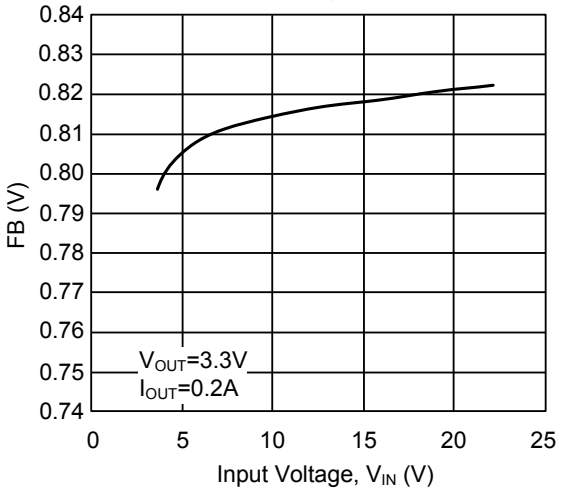

Line Regulation

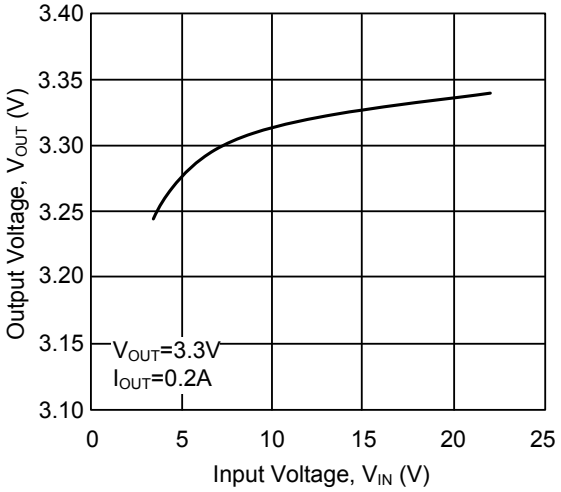

Load Regulation

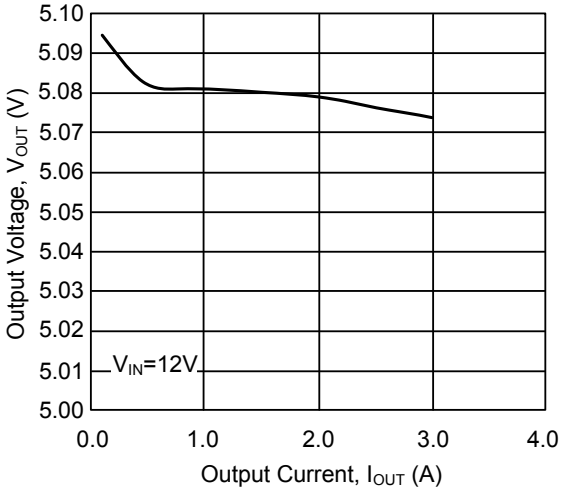

Efficiency

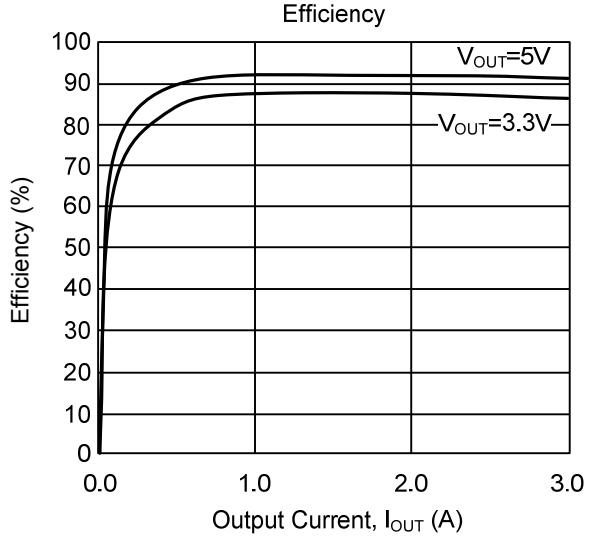

■ TYPICAL CHARACTERISTICS(Cont.)

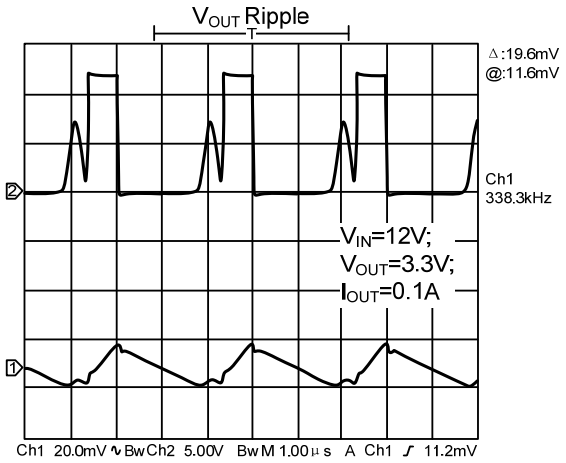

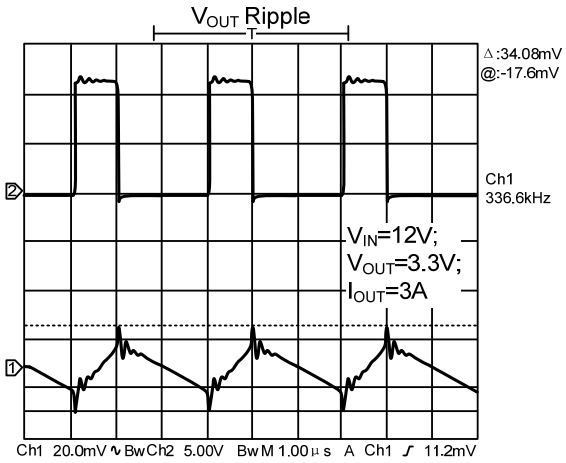

UTC assumes no responsibility for equipment failures that result from using products at values that exceed, even momentarily, rated values (such as maximum ratings, operating condition ranges, or other parameters) listed in products specifications of any and all UTC products described or contained herein. UTC products are not designed for use in life support appliances, devices or systems where malfunction of these products can be reasonably expected to result in personal injury. Reproduction in whole or in part is prohibited without the prior written consent of the copyright owner. The information presented in this document does not form part of any quotation or contract, is believed to be accurate and reliable and may be changed without notice.