Notebook LCD Panel EMI Reduction IC

Features

- FCC approved method of EMI attenuation.
- Generates a low EMI spread spectrum clock of the input frequency.
- Optimized for frequency range from 60MHz to 175MHz.
- Internal loop filter minimizes external components and board space.
- Four selectable spread ranges.
- Low inherent Cycle-to-cycle jitter.
- 3.3V Operating Voltage.
- Ultra-low power CMOS design.
  - 14.85 mA @3.3V, 140MHz
  - 16.69 mA @3.3V, 162MHz
  - 17.78 mA @3.3V, 175MHz
- Supports notebook VGA and other LCD timing controller applications.
- Pinout compatible to ICS MK1707 and Cypress CY25561/CY25560.
- SSON/SBM pin for Spread Spectrum On/Off and Standby Mode controls.
- Available in 8-pin SOIC and TSSOP Packages.

Product Description

The P1707A is a versatile spread spectrum frequency modulator designed specifically for input clock frequencies. The P1707A reduces electromagnetic interference (EMI) at the clock source, allowing system wide reduction of EMI of down stream clock and data dependent signals. The P1707A allows significant system cost savings by reducing the number of circuit board layers ferrite beads, shielding and other passive components that are traditionally required to pass EMI regulations.

The P1707A modulates the output of a single PLL in order to "spread" the bandwidth of a synthesized clock, and more importantly, decreases the peak amplitudes of its harmonics. This results in significantly lower system EMI compared to the typical narrow band signal produced by oscillators and most frequency generators. Lowering EMI by increasing a signal's bandwidth is called 'spread spectrum clock generation'.

The P1707A uses the most efficient and optimized modulation profile approved by the FCC and is implemented in a proprietary all digital method.

Applications

The P1707A is targeted towards notebook LCD displays, and other displays using an LVDS interface, PC peripheral devices, and embedded systems.

Block Diagram

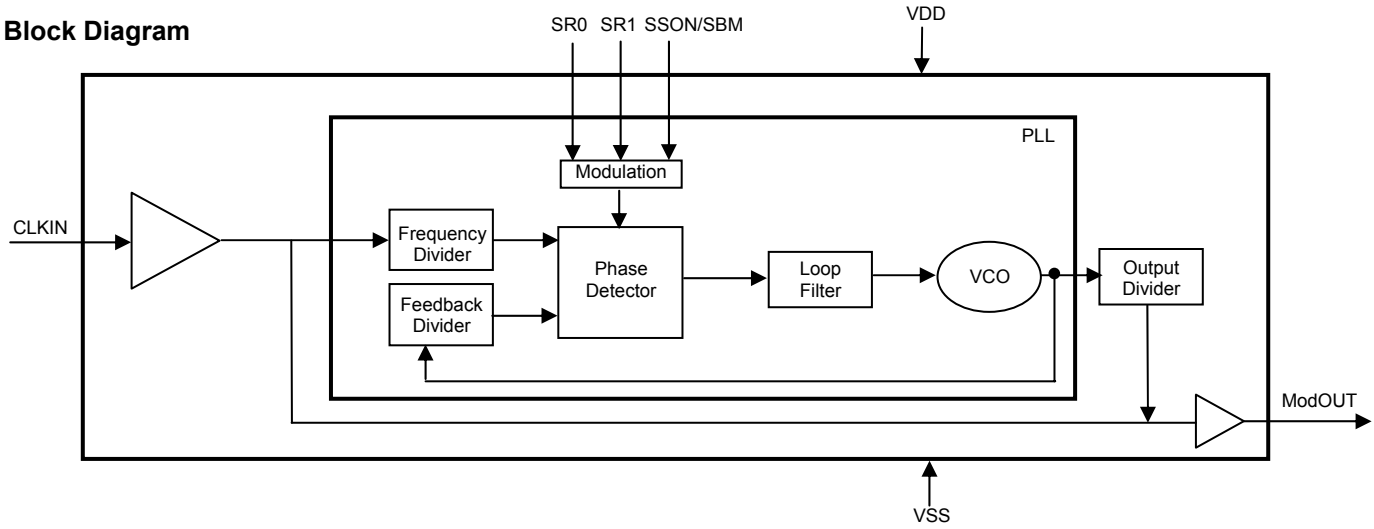

PulseCore Semiconductor Corporation
1715 S. Bascom Ave Suite 200, Campbell, CA 95008 • Tel: 408-879-9077 • Fax: 408-879-9018
www.pulsecoresemi.com

Notice: The information in this document is subject to change without notice.

rev 1.2

Pin Configuration

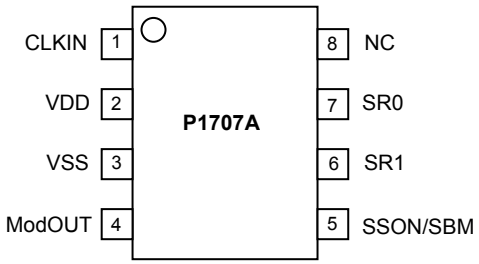

Pin Description

Pin#	Pin Name	Type	Description
1	CLKIN	I	Connect to externally generated clock signal. To put the part into standby mode, disable the input clock signal to this pin and pull SSON/SBM (pin 5) low. *Refer Standby Mode Selection Table.*
2	VDD	P	Connect to +3.3V. (Place a decoupling 0.1µF close to pin and ground)
3	VSS	P	Ground Connection. Connect to system ground.
4	ModOUT	O	Spread spectrum clock output.
5	SSON/SBM	I	Spread Spectrum On/Off and standby mode control. *Refer Standby Mode Selection Table.* This pin has an internal pull-up resistor.
6	SR1	I	Digital logic input used to select Spreading Range. *Refer Spread Spectrum Selection Table.* This pin has an internal pull-up resistor.
7	SR0	I	Digital logic input used to select Spreading Range. *Refer Spread Spectrum Selection Table.* This pin has an internal pull-up resistor.
8	NC	-	No connect.

Standby Mode Selection

CLKIN	SSON/SBM	Spread Spectrum	ModOUT	PLL	Mode
Disabled	0	N/A	Disabled	Disabled	Standby
Disabled	1	N/A	Disabled	Free Running	Free Running
Enabled	0	Off	Reference	Disabled	Buffer out
Enabled	1	On	Normal	Normal	Normal

Spread Range Selection

SR1	SR0	Spreading Range	Modulation Rate
0	0	± 1.50%	$(F_{IN}/80) * 34.72$ KHz
0	1	± 2.50%	$(F_{IN}/80) * 34.72$ KHz
1	0	± 0.50%	$(F_{IN}/80) * 34.72$ KHz
1	1	± 1.00%	$(F_{IN}/80) * 34.72$ KHz

Notice: The information in this document is subject to change without notice.

rev 1.2

Absolute Maximum Ratings

Symbol	Parameter	Rating	Unit
VDD, V_{IN}	Voltage on any pin with respect to Ground	-0.5 to +4.6	V
T_{STG}	Storage temperature	-65 to +125	°C
T_A	Operating temperature	-40 to +85	°C
T_s	Max. Soldering Temperature (10 sec)	260	°C
T_J	Junction Temperature	150	°C
T_{DV}	Static Discharge Voltage (As per JEDEC STD22- A114-B)	2	KV

Note: These are stress ratings only and are not implied for functional use. Exposure to absolute maximum ratings for prolonged periods of time may affect device reliability.

DC Electrical Characteristics

Symbol	Parameter	Min	Typ	Max	Unit
V_{IL}	Input low voltage	VSS – 0.3	-	0.8	V
V_{IH}	Input high voltage	2.0	-	VDD+ 0.3	V
I_{IL}	Input low current (pull-up resistors on inputs SR0, SR1 and SSON/SBM)	-	-	-35	µA
I_{IH}	Input high current	-	-	35	µA
I_{XOL}	X_{OUT} output low current (V_{XOL} @ 0.4V, VDD = 3.3V)	-	3	-	mA
I_{XOH}	X_{OUT} output high current (V_{XOH} @ 2.5V, VDD = 3.3V)	-	3	-	mA
V_{OL}	Output low voltage VDD= 3.3V, I_{OL} = 20mA	-	-	0.4	V
V_{OH}	Output high voltage VDD = 3.3V, I_{OH} = 20mA	2.5	-	-	V
I_{CC}	Dynamic supply current normal mode 3.3V and 10pF loading	8.46	12	17.78	mA
I_{DD}	Static supply current standby mode	-	0.6	-	mA
VDD	Operating voltage	2.7	3.3	3.7	V
t_{ON}	Power up time (first locked clock cycle after power up)	-	0.18	-	mS
Z_{OUT}	Clock output impedance	-	20	-	Ω

AC Electrical Characteristics

Symbol	Parameter	Min	Typ	Max	Unit
f_{IN}	Input frequency	60	-	175	MHz
f_{OUT}	Output frequency	60	-	175	MHz
t_{LH}*	Output rise time (Measured from 0.8V to 2.0V)	0.7	0.9	1.1	nS
t_{HL}*	Output fall time (Measured from 2.0V to 0.8V)	0.6	0.8	1.0	nS
t_{JC}	Jitter (Cycle to cycle)	-	-	360	pS
t_D	Output duty cycle	45	50	55	%

*t_{LH} and t_{HL} are measured into a capacitive load of 15pF

Notice: The information in this document is subject to change without notice.

Mechanical Package Outline 8-Pin SOIC Package

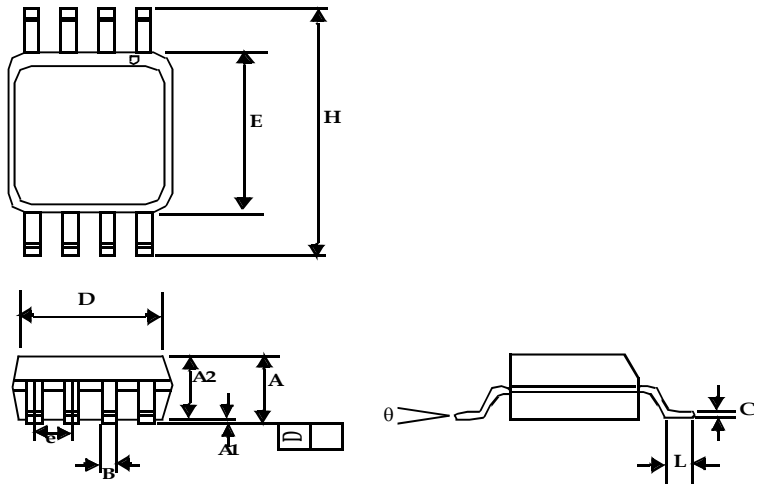

Symbol	Dimensions			
	Inches		Millimeters	
	Min	Max	Min	Max
A1	0.004	0.010	0.10	0.25
A	0.053	0.069	1.35	1.75
A2	0.049	0.059	1.25	1.50
B	0.012	0.020	0.31	0.51
C	0.007	0.010	0.18	0.25
D	0.193 BSC		4.90 BSC	
E	0.154 BSC		3.91 BSC	
e	0.050 BSC		1.27 BSC	
H	0.236 BSC		6.00 BSC	
L	0.016	0.050	0.41	1.27
θ	0°	8°	0°	8°

Note: Controlling dimensions are millimeters
SOIC – 0.074 grams unit weight

Notice: The information in this document is subject to change without notice.

Mechanical Package Outline 8-Pin TSSOP

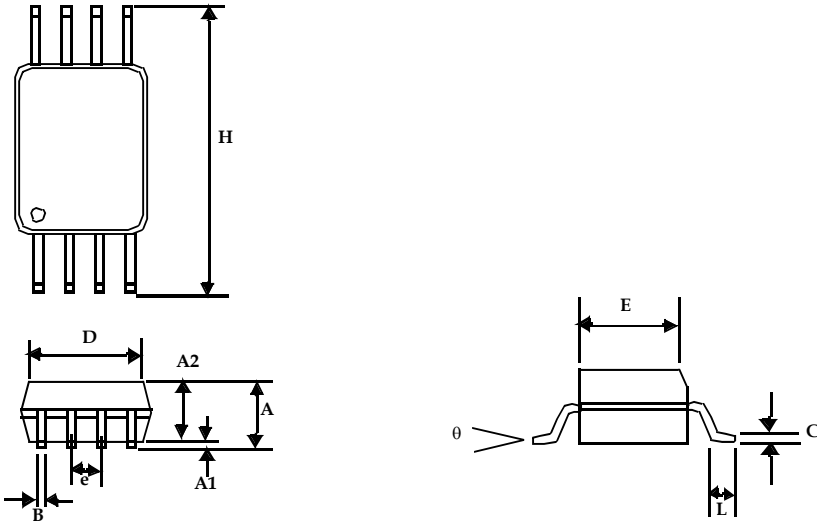

Symbol	Dimensions			
	Inches		Millimeters	
	Min	Max	Min	Max
A		0.043		1.10
A1	0.002	0.006	0.05	0.15
A2	0.033	0.037	0.85	0.95
B	0.008	0.012	0.19	0.30
c	0.004	0.008	0.09	0.20
D	0.114	0.122	2.90	3.10
E	0.169	0.177	4.30	4.50
e	0.026 BSC		0.65 BSC	
H	0.252 BSC		6.40 BSC	
L	0.020	0.028	0.50	0.70
θ	0°	8°	0°	8°

Note: Controlling dimensions are millimeters
TSSOP – 0.034 grams unit weight

Notice: The information in this document is subject to change without notice.

Ordering Codes

Part Number	Marking	Package Type	Qty per reel	Temperature
P1707AF-08ST	P1707AF	8-pin SOIC, Tube, Pb-Free		Commercial
P1707AF-08SR	P1707AF	8-pin SOIC, Tape & Reel, Pb Free	2500	Commercial
P1707AF-08TT	P1707AF	8-pin TSSOP, Tube, Pb Free		Commercial
P1707AF-08TR	P1707AF	8-pin TSSOP, Tape and Reel, Pb Free	2500	Commercial
P1707AG-08ST	P1707AG	8-pin SOIC, Tube, Green		Commercial
P1707AG-08SR	P1707AG	8-pin SOIC, Tape & Reel, Green	2500	Commercial
P1707AG-08TT	P1707AG	8-pin TSSOP, Tube, Green		Commercial
P1707AG-08TR	P1707AG	8-pin TSSOP, Tape and Reel, Green	2500	Commercial

Device Ordering Information

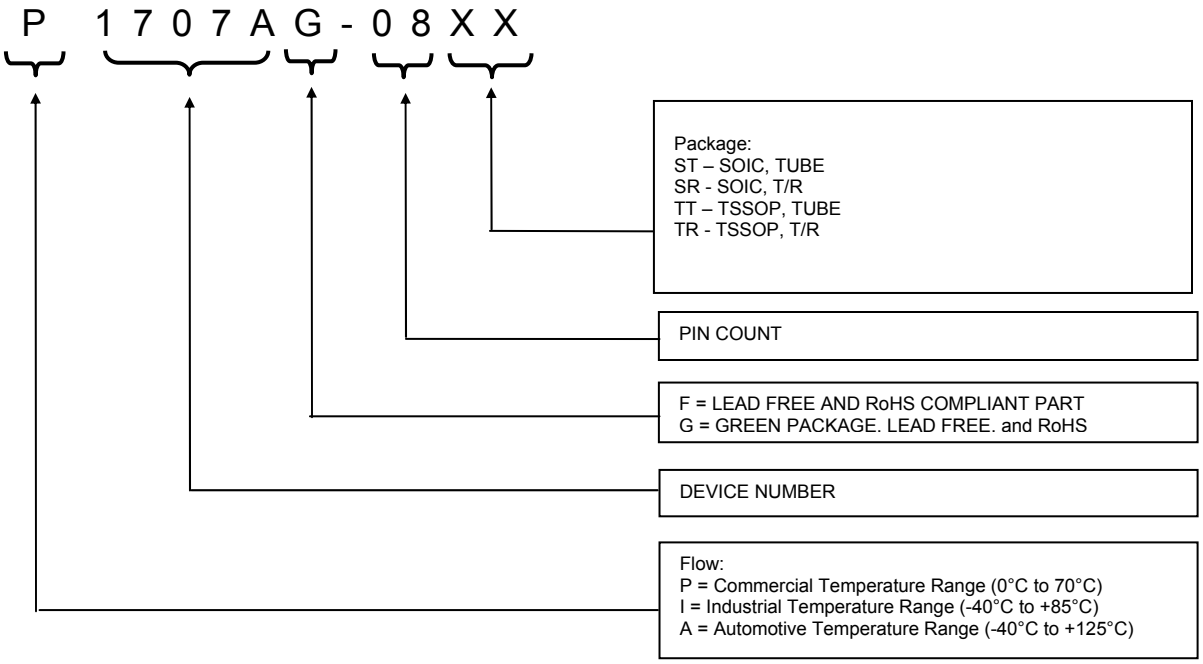

Licensed under U.S Patent Nos 5,488,627 and 5,631,921

Notice: The information in this document is subject to change without notice.

PulseCore Semiconductor Corporation
1715 S. Bascom Ave Suite 200
Campbell, CA 95008
Tel: 408-879-9077
Fax: 408-879-9018
www.pulsecoresemi.com

Copyright © PulseCore Semiconductor
All Rights Reserved
Part Number: P1707A
Document Version: v1.3

Note: This product utilizes US Patent # 6,646,463 Impedance Emulator Patent issued to PulseCore Semiconductor, dated 11-11-2003

© Copyright 2007 PulseCore Semiconductor Corporation. All rights reserved. Our logo and name are trademarks or registered trademarks of PulseCore Semiconductor. All other brand and product names may be the trademarks of their respective companies. PulseCore reserves the right to make changes to this document and its products at any time without notice. PulseCore assumes no responsibility for any errors that may appear in this document. The data contained herein represents PulseCore's best data and/or estimates at the time of issuance. PulseCore reserves the right to change or correct this data at any time, without notice. If the product described herein is under development, significant changes to these specifications are possible. The information in this product data sheet is intended to be general descriptive information for potential customers and users, and is not intended to operate as, or provide, any guarantee or warrantee to any user or customer. PulseCore does not assume any responsibility or liability arising out of the application or use of any product described herein, and disclaims any express or implied warranties related to the sale and/or use of PulseCore products including liability or warranties related to fitness for a particular purpose, merchantability, or infringement of any intellectual property rights, except as express agreed to in PulseCore's Terms and Conditions of Sale (which are available from PulseCore). All sales of PulseCore products are made exclusively according to PulseCore's Terms and Conditions of Sale. The purchase of products from PulseCore does not convey a license under any patent rights, copyrights; mask works rights, trademarks, or any other intellectual property rights of PulseCore or third parties. PulseCore does not authorize its products for use as critical components in life-supporting systems where a malfunction or failure may reasonably be expected to result in significant injury to the user, and the inclusion of PulseCore products in such life-supporting systems implies that the manufacturer assumes all risk of such use and agrees to indemnify PulseCore against all claims arising from such use.