P1696 *LINEAR INTEGRATED CIRCUIT*

200KHZ, 2A PWM STEP-DOWN DC/DC CONVERTER

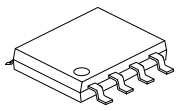

SOP-8

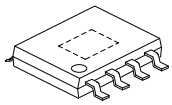

HSOP-8

■ DESCRIPTION

The UTC **P1696** series is a step-down switching regulator able to provide 2A output current. The available output voltages are 2.5V 3.3V, 5V, 12V, and an adjustable output version.

■ FEATURES

*Output load current: 2A
*Adjustable version output voltage range, 1.23V ~ 17.5V±4%
*Operating voltage can be up to 24V
*Low power standby mode
*High efficiency
*Internal OCP and OTP

■ ORDERING INFORMATION

Ordering Number		Package	Packing
Lead Free	Halogen Free		
P1696L-xx-S08-T	P1696G-xx-S08-T	SOP-8	Tube
P1696L-xx-S08-R	P1696G-xx-S08-R	SOP-8	Tape Reel
P1696L-xx-SH2-R	P1696G-xx-SH2-R	HSOP-8	Tape Reel

P1696L-xx-S08-T

(1)Packing Type
(2)Package Type
(3)Output Voltage Code
(4)Lead Free

(1) T: Tube, R: Tape Reel
(2) S08: SOP-8, SH2: HSOP-8
(3) xx: refer to Output Voltage Code
(4) L: Lead Free, G: Halogen Free

Copyright © 2013 Unisonic Technologies Co., Ltd

■ MARKING INFORMATION

PACKAGE	VOLTAGE CODE	MARKING
SOP-8 HSOP-8	25: 2.5V 33: 3.3V 50: 5.0V 12: 12V AD: ADJ	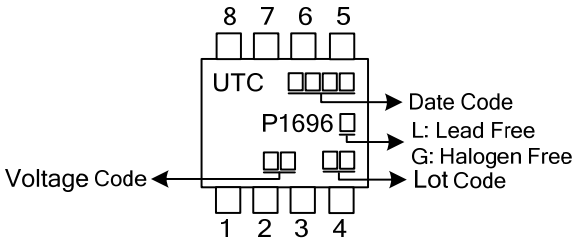

■ PIN CONFIGURATION

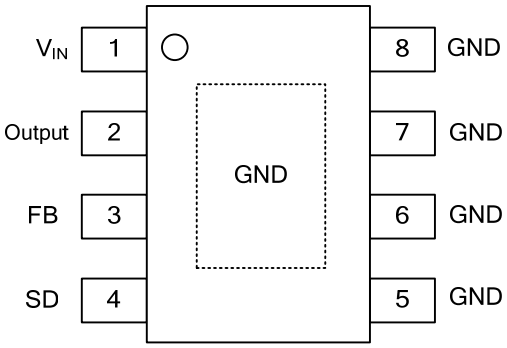

■ PIN DESCRIPTION

PIN NO.	PIN NAME	DESCRIPTION
1	V_{IN}	Power input
2	Output	Switching
3	FB	Feedback Voltage
4	SD	Enable input
5,6,7,8	GND	ground

■ BLOCK DIAGRAM

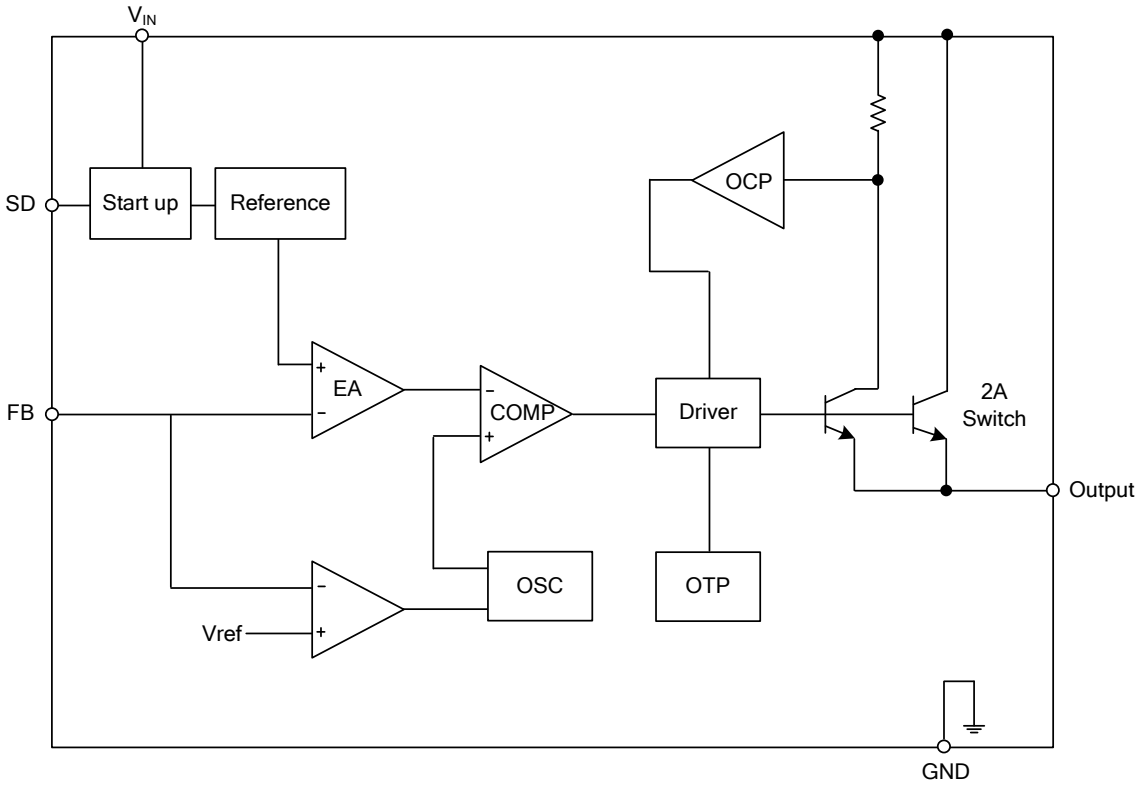

■ ABSOLUTE MAXIMUM RATINGS

PARAMETER	SYMBOL	RATINGS	UNIT
Maximum Supply Voltage	V_{CC}	28	V
Operating Voltage	V_{OPR}	4.5 ~ 24	V
$\overline{ON}$/OFF Pin Input Voltage	$V_{\overline{ON}/OFF}$	-0.3 ~ +12	V
Feedback Pin Voltage	V_{FB}	-0.3 ~ +12	V
Output Voltage to Ground (Steady State)	V_{OUT}	-1	V
Power Dissipation	P_D	Internally limited	mW
Junction Temperature	T_J	+150	°C
Operating Temperature	T_{OPR}	-40 ~ +125	°C
Storage Temperature	T_{STG}	-40 ~ +150	°C

Note: Absolute maximum ratings are those values beyond which the device could be permanently damaged. Absolute maximum ratings are stress ratings only and functional device operation is not implied.

■ ELECTRICAL CHARACTERISTICS

(T_J=25°C, V_{IN}=12V for the 2.5V 3.3V, 5V, and Adjustable version and V_{IN}=24V for the 12V version, I_{LOAD}=500mA.)

PARAMETER		SYMBOL	TEST CONDITIONS	MIN	TYP	MAX	UNIT
Output Voltage	2.5V	V_{OUT}	$5.0V \leqq V_{IN} \leqq 24V$, $0.2A \leqq I_{LOAD} \leqq 2A$	2.4	2.5	2.6	V
	3.3V		$6.0V \leqq V_{IN} \leqq 24V$, $0.2A \leqq I_{LOAD} \leqq 2A$	3.168	3.3	3.432	V
	5.0V		$7.5V \leqq V_{IN} \leqq 24V$, $0.2A \leqq I_{LOAD} \leqq 2A$	4.8	5.0	5.2	V
	12V		$15V \leqq V_{IN} \leqq 24V$, $0.2A \leqq I_{LOAD} \leqq 2A$	11.52	12.0	12.48	V
Efficiency	2.5V	η	V_{IN}=12V, I_{LOAD}=2A		73		%
	3.3V		V_{IN}=12V, I_{LOAD}=2A		75		%
	5.0V		V_{IN}=12V, I_{LOAD}=2A		80		%
	12V		V_{IN}=24V, I_{LOAD}=2A		80		%
UTC P1696-ADJ							
Feedback Voltage		VFB	$4.5V \leqq V_{IN} \leqq 24V$, $0.2A \leqq I_{LOAD} \leqq 2A$ V_{OUT} programmed for 3V	1.19	1.230	1.267	V
Efficiency		η	V_{IN}=12V, V_{OUT}=3V, I_{LOAD}=2A		75		%
ALL OUTPUT VOLTAGE							
Feedback Bias Current		I_{BIAS}	Adjustable Version Only, V_{FB}=1.3V		10	50	nA
Oscillator Frequency		f_{OSC}	(Note 1)	170	200	230	kHz
Saturation Voltage		V_{SAT}	I_{OUT}=2A (Note 2, 3)		1.16	1.4	V
Max Duty Cycle (ON) Min Duty Cycle (OFF)		DC	(Note 3) (Note 4)		100 0		%
Current Limit		I_{CL}	Peak Current (Notes 2, 3)		2.5		A
Output Leakage Current		I_L	Output=0V (Notes 2, 4)			50	μA
			Output=-1V (Note 5)		2	30	mA
Quiescent Current		I_Q	(Note 4)		5	10	mA
Standby Quiescent Current		I_{STBY}	ON/OFF Pin=5V (OFF) (Note 5)		80	200	μA
ON/OFF CONTROL							
$\overline{ON}$ /OFF Pin Logic Input Threshold Voltag		V_{IH}	Low (Regulator ON)		1.3		V
		V_{IL}	High (Regulator OFF)		1.3		V
$\overline{ON}$ /OFF Pin Input Current		I_H	VLOGIC=2.5V (Regulator OFF)		5	15	μA
		I_L	VLOGIC=0.5V (Regulator ON)		0.02	5	μA

Note 1: The switching frequency is reduced when the second stage current limit is activated.
2: No diode, inductor or capacitor connected to output pin.
3: Feedback pin removed from output and connected to 0V to force the output transistor switch ON.
4: Feedback pin removed from output and connected to 12V for the 2.5V 3.3V, 5V, and the ADJ. version, and 15V for the 12V version, to force the output transistor switch OFF.
5: V_{IN} = 24V

■ FIXED OUTPUT VOLTAGE VERSIONS

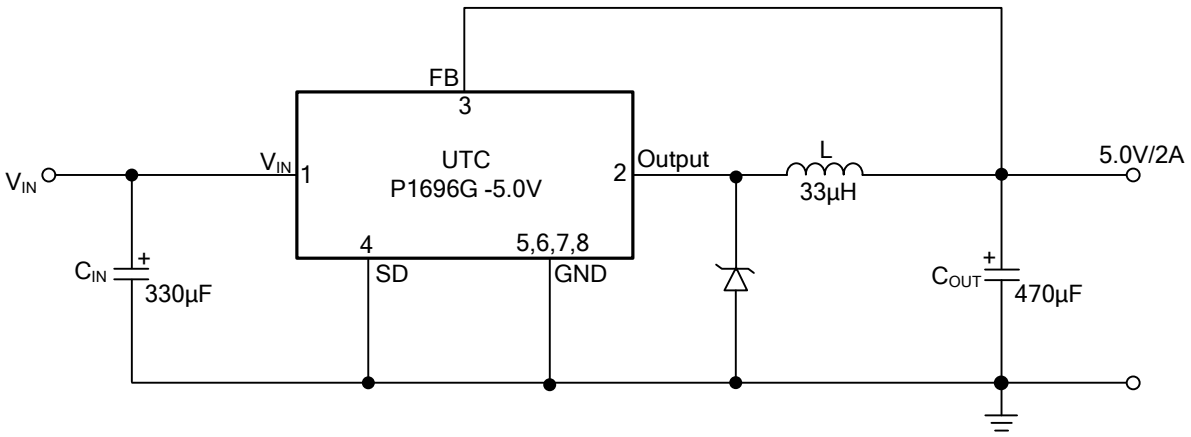

■ ADJUSTABLE OUTPUT VOLTAGE VERSIONS

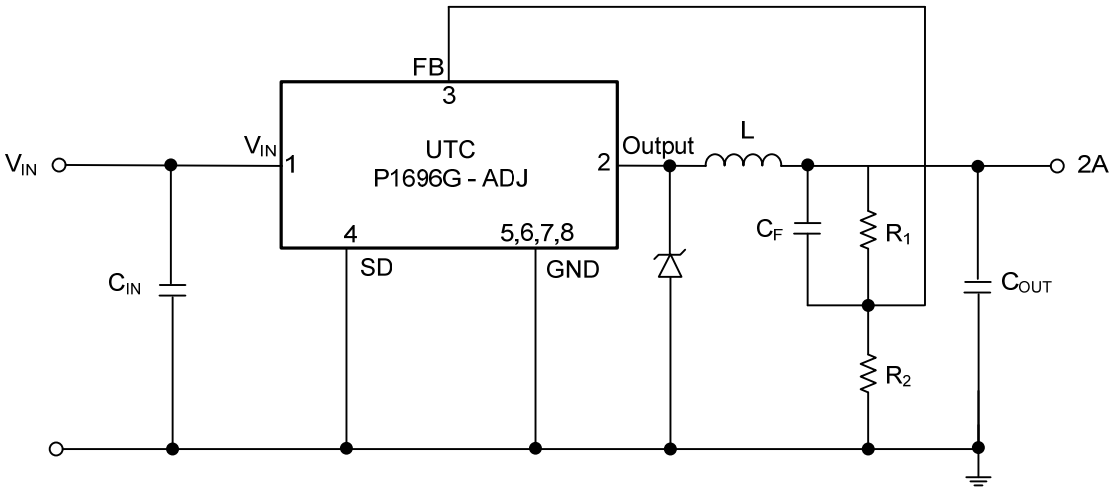

Note:1. $V_{OUT} = (1+\frac{R_1}{R_2})V_{FB}$

2. Tested under typical application condition:

C_{IN}	L	C_{OUT}	C_F	
330μF	33μH	470μF	-	
330μF	33μH	220μF	V_{IN}<17V	-
			V_{IN}≥17V	220pF(option)

■ TYPICAL CHARACTERISTICS

Normalized Output Voltage

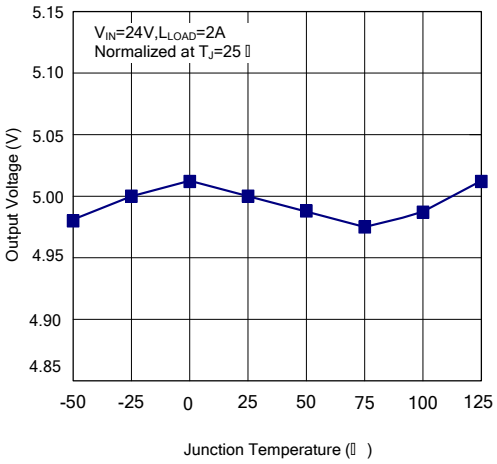

Line Regulation

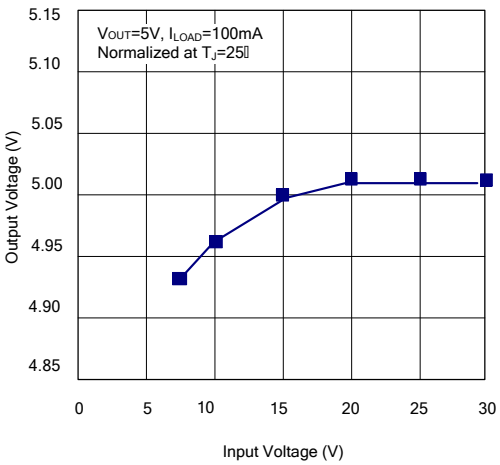

Efficiency

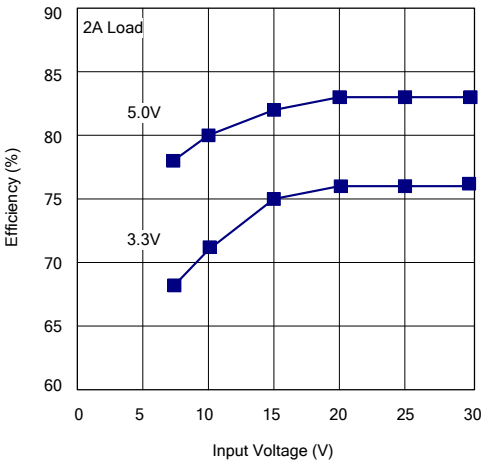

Switch Saturation Voltage

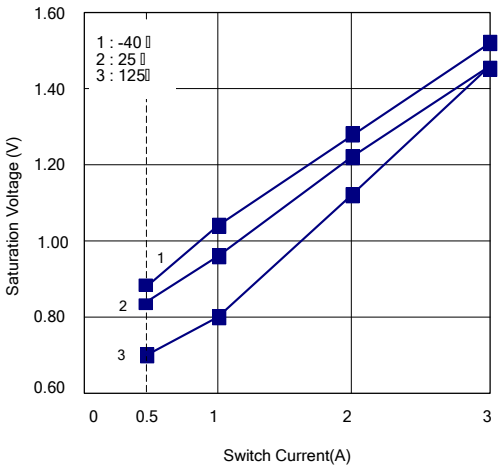

■ FUNCTION DESCRIPTION

The changes of output load can cause the output voltage changes. The changes can be sensed by FB pin. The output of error amplifier controlling output duty circle makes the output stable.

The **P1696** incorporates an over current protection internally. Once the output is in overcurrent, power transistor must be turned off immediately. In that case, the power transistor will not be damaged by the excessive current.

If over-load or short-circuit condition happens, the oscillation frequency will be reduced, which make the power transistor bears less heat, so the power transistor is protected from damage.

UTC assumes no responsibility for equipment failures that result from using products at values that exceed, even momentarily, rated values (such as maximum ratings, operating condition ranges, or other parameters) listed in products specifications of any and all UTC products described or contained herein. UTC products are not designed for use in life support appliances, devices or systems where malfunction of these products can be reasonably expected to result in personal injury. Reproduction in whole or in part is prohibited without the prior written consent of the copyright owner. The information presented in this document does not form part of any quotation or contract, is believed to be accurate and reliable and may be changed without notice.