P1200 A ... P1200 M

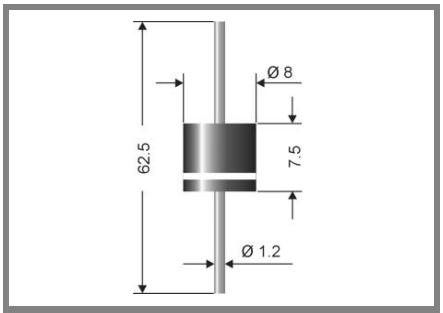

Axial lead diode

Standard silicon rectifier diodes

P1200 A ... P1200 M

Forward Current: 12 A

Reverse Voltage: 50 to 1000 V

Features

- Max. solder temperature: 260°C
- Plastic material has UL classification 94V-0

Mechanical Data

- Plastic case: 8 x 7,5 [mm] / P-600 Style
- Weight approx.: 1,5 g
- Terminals: plated terminals solderable per MIL-STD-750
- Mounting position: any
- Standard packaging: 500 pieces per ammo

1) Vailid, if leads are kept at ambient temperature at a distance of 10 mm from case
2) I_F = 5 A, T_A = 25 °C
3) T_A = 25 °C

Type	Repetitive peak reverse voltage V_{RRM} V	Surge peak reverse voltage V_{RSM} V	Max. reverse recovery time I_F = - A, I_R = - A, I_{RR} = - A, t_{rr} ns	Max. forward voltage V_F 2)
P 1200 A	50	50	-	0,84
P 1200 B	100	100	-	0,84
P 1200 D	200	200	-	0,84
P 1200 G	400	400	-	0,84
P 1200 J	600	600	-	0,88
P 1200 K	800	800	-	0,88
P 1200 M	1000	1000	-	0,88

Absolute Maximum Ratings		T_c = 25 °C, unless otherwise specified	
Symbol	**Conditions**	**Values**	**Units**
I_{FAV}	Max. averaged fwd. current, R-load, T_A = 50 °C 1)	12	A
I_{FRM}	Repetitive peak forward current f > 15 Hz 1)	80	A
I_{FSM}	Peak forward surge current 50 Hz half sinus-wave 3)	600	A
i²t	Rating for fusing, t < 10 ms 3)	1800	A²s
R_{thA}	Max. thermal resistance junction to ambient 1)	14	K/W
R_{thT}	Max. thermal resistance junction to terminals 1)	8	K/W
T_j	Operating junction temperature	-50 ... +150	°C
T_s	Storage temperature	-50 ... +150	°C

Characteristics		T_c = 25 °C, unless otherwise specified	
Symbol	**Conditions**	**Values**	**Units**
I_R	Maximum leakage current, T_j = 25 °C; V_R = V_{RRM}	<25	µA
	T_j = °C; V_R = V_{RRM}		
C_J	Typical junction capacitance (at MHz and applied reverse voltage of V)	-	pF
Q_{rr}	Reverse recovery charge (U_R = V; I_F = A; dI_F/dt = A/ms)	-	µC
E_{RSM}	Non repetitive peak reverse avalanche energy (I_R = mA; T_j = °C; inductive load switched off)	-	mJ

Dimensions in mm

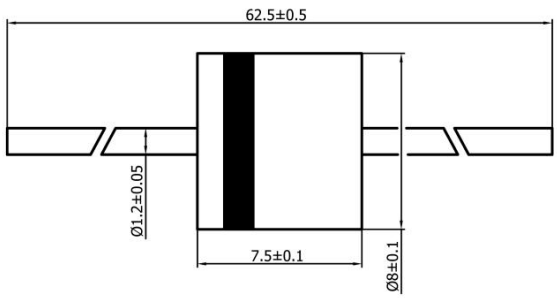

case: 8 x 7,5 [mm]

 © by SEMIKRON

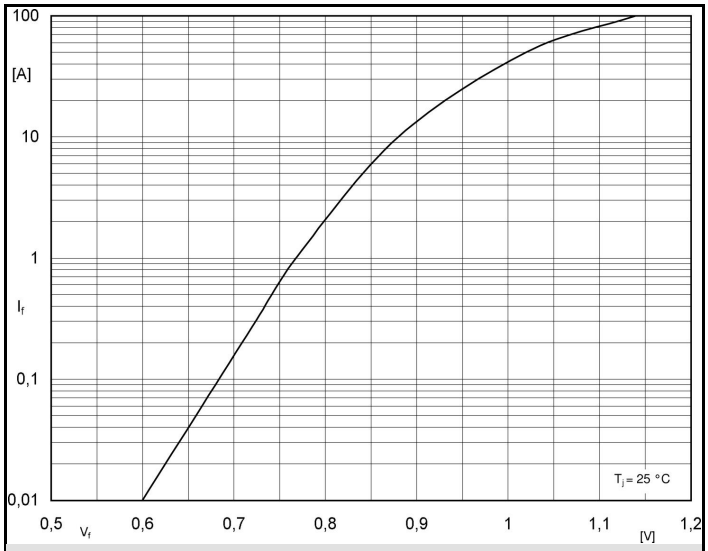

Fig. 1 Forward characteristics (typical values)

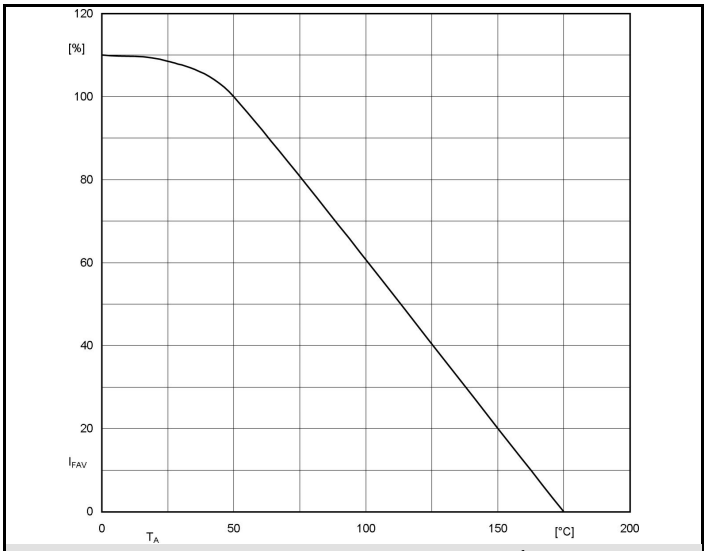

Fig. 2 Rated forward current vs. ambient temperature [1])

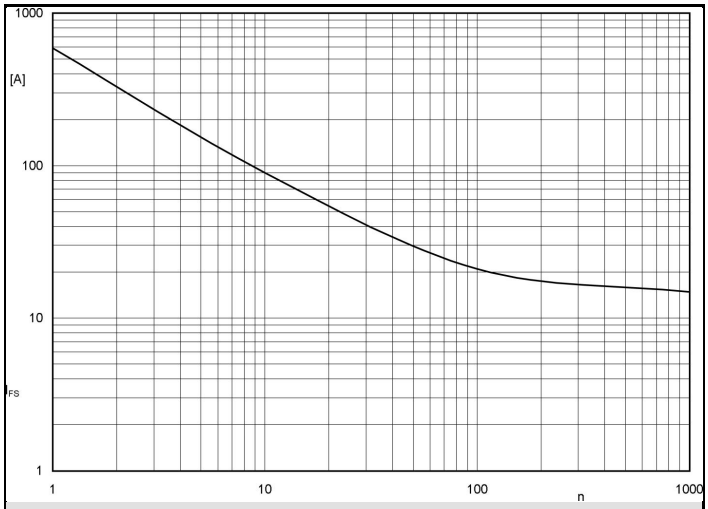

Fig. 3 I_{FSM} current versus number of cycles at 50 Hz

 © by SEMIKRON